PLOT DATE : 12/13/2019 11:17 AM

PLOT BY : JENNIFER LAUER

FILE NAME : G:\FITCHBRG\18013-000\CIVIL3D\SHEETSPLAN\STRUCTURES CAD\080301-GP.DWG

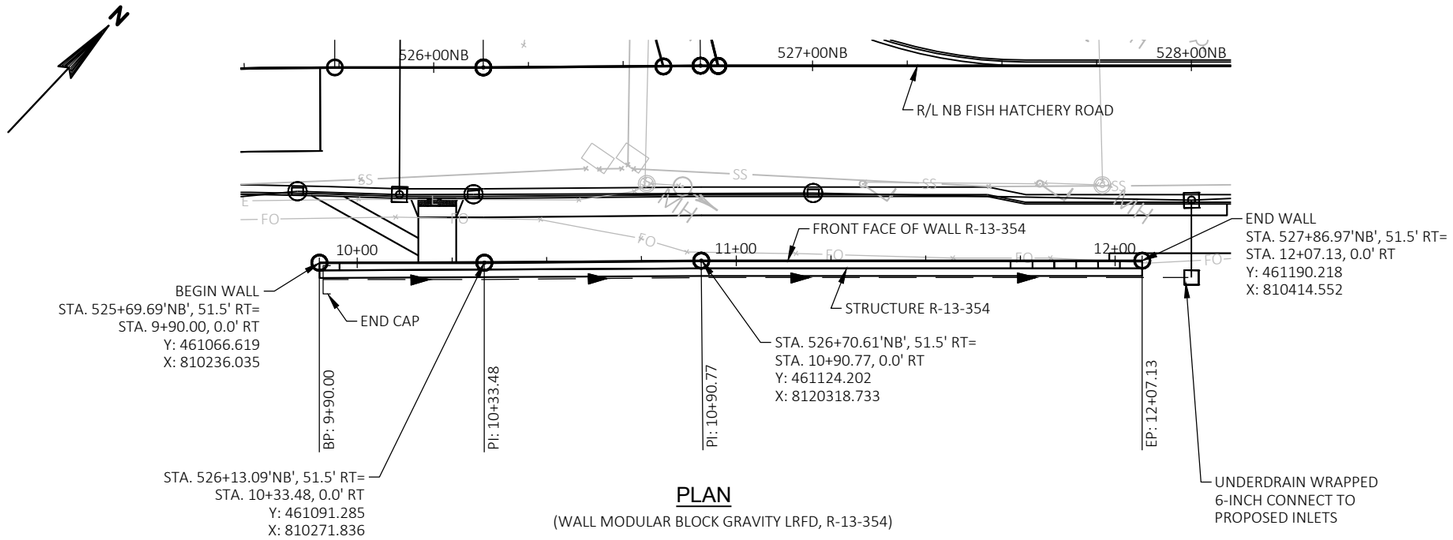

PLAN

(WALL MODULAR BLOCK GRAVITY LRFD, R-13-354)

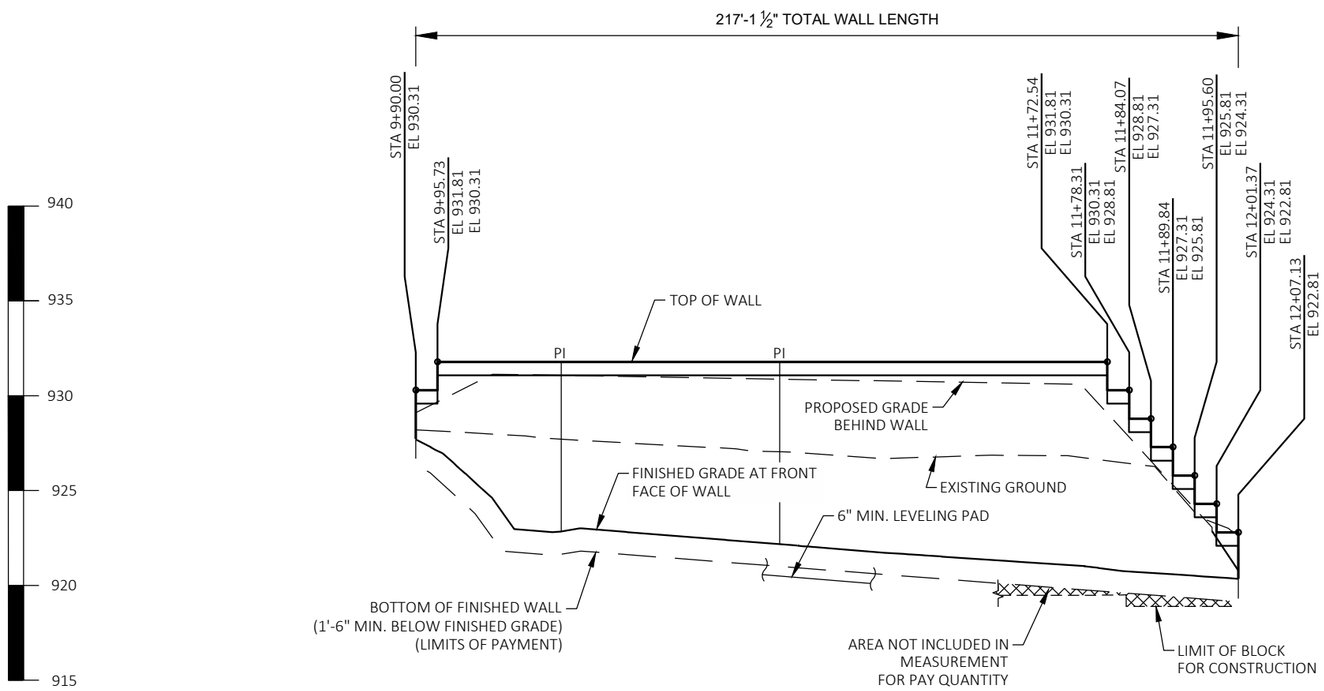

ELEVATION

(LOOKING AT BACK FACE OF WALL, R-13-354)

GENERAL NOTES

DRAWINGS SHALL NOT BE SCALED

THE PLAN QUANTITY FOR THE BID ITEM "WALL MODULAR BLOCK GRAVITY LRFD R-13-354" IS BASED ON A WALL HEIGHT MEASURED FROM THE TOP OF THE WALL TO A CONSTANT DEPTH OF 1'-6" BELOW FINISHED GRADE.

BLOCK FACE SHALL HAVE THE APPEARANCE OF REDI-ROCK LEDGE STONE OR APPROVED EQUAL. WALL CONCRETE STAINING COLOR TO BE FEDERAL COLOR NO. 33448. COPING CONCRETE STAINING COLOR TO BE FEDERAL COLOR NO. 26134.

EXCAVATION FOR WALL IS INCLUDED WITH ITEM "WALL MODULAR BLOCK GRAVITY LRFD R-13-354".

ALL STATION AND ALL ELEVATIONS ARE IN FEET.

ALL DIMENSIONS AND STATIONING ARE ALONG THE FRONT FACE OF WALL AT FINISHED GROUND, UNLESS SHOWN OTHERWISE.

DESIGN DATA

THE CONTRACTOR SHALL PROVIDE COMPLETE DESIGN, PLANS, DETAILS, SPECIFICATIONS, AND SHOP DRAWINGS FOR THE RETAINING WALLS IN ACCORDANCE WITH THE SPECIAL PROVISIONS. THE RETAINING WALL MANUFACTURER SHALL PROVIDE TECHNICAL ASSISTANCE TO THE CONTRACTOR DURING CONSTRUCTION. THE COST OF FURNISHING THESE ITEMS SHALL BE INCLUDED IN THE BID ITEM "WALL MODULAR BLOCK GRAVITY LRFD R-13-354".

PLANS, ELEVATIONS AND DETAILS SHOWN ON THESE DRAWINGS ARE INTENDED TO INDICATE WALL LOCATIONS, LENGTHS, HEIGHTS, AND DETAILS COMMON TO THE WALL SYSTEM SELECTED. THE CONTRACTOR SHALL VERIFY THAT THE WALL SYSTEM SELECTED WILL CONFORM TO THE REQUIRED ALIGNMENTS AND DETAILS.

THE RETAINING WALL IS TO BE DESIGNED USING ELEVATIONS GIVEN ON THIS SHEET AND IN THE GEOMETRY TABLE ON SHEET 3.

DESIGN FOR RETAINING WALL TO PROVIDE FOR FINISHED GRADE SLOPED BEHIND WALL AS SHOWN ON THE TYPICAL WALL SECTION AND ROADWAY CROSS SECTIONS.

DESIGN RETAINING WALL FOR A LIVE LOAD OF 100 PSF.

CONTRACTOR TO VERIFY STEP LOCATIONS BASED ON BLOCK LENGTHS USED. WALL WAS DESIGNED USING REDI-ROCK BLOCK DIMENSIONS.

LIST OF DRAWINGS

1. GENERAL PLAN
2. TYPICAL SECTIONS AND DETAILS
3. WALL GEOMETRY AND SOIL PROPERTIES
4. SUBSURFACE EXPLORATION

WISCONSIN
CHAD D. HALVERSON
E-34364
MADISON, WI
PROFESSIONAL ENGINEER

December 13, 2019

STRUCTURE DESIGN CONTACT
CHAD HALVERSON (608) 663-1218

TOTAL ESTIMATED QUANTITIES

BID ITEM NO.	BID ITEMS	UNIT	TOTAL
648.2	PIPE UNDERDRAIN WRAPPED 6-INCH	LF	232
902.19.07	CONCRETE STAINING R-13-354	SF	3,060
902.20.07	WALL MODULAR BLOCK GRAVITY LRFD, R-13-354	SF	2,200

BENCHMARK TABLE

NO.	STATION	OFFSET	DESCRIPTION	ELEV.
50	519+51.05'NB'	12.58' LT	WEST CORNER OF CONC. BASE LIGHT PEDESTAL	931.62
51	527+53.49'NB'	81.20' RT	NORTHWEST CORNER OF CONCRETE PAS TF SB	921.50

KL Engineering
[A] Better Experience
5400 King James Way
Suite 200
Madison, WI. 53719
Phone: (608) 663-1218
Phone: (800)-810-4012
http://klengineering.com
email@klengineering.com

CITY OF FITCHBURG

GENERAL PLAN R-13-354

Project No:	18013
Date:	7-29-2019
Designed By:	CAH
Drafted By:	STD
Checked By:	CDH

Revisions:

SHEET NO.

1 OF 4

PLOT DATE : 7/23/2019 10:26 AM

PLOT BY : SCOTT DEMEUSE

FILE NAME : G:\FITCHBRG\18013-000\CIVIL3D\SHEETSPLAN\STRUCTURES CAD\080302-XS.DWG

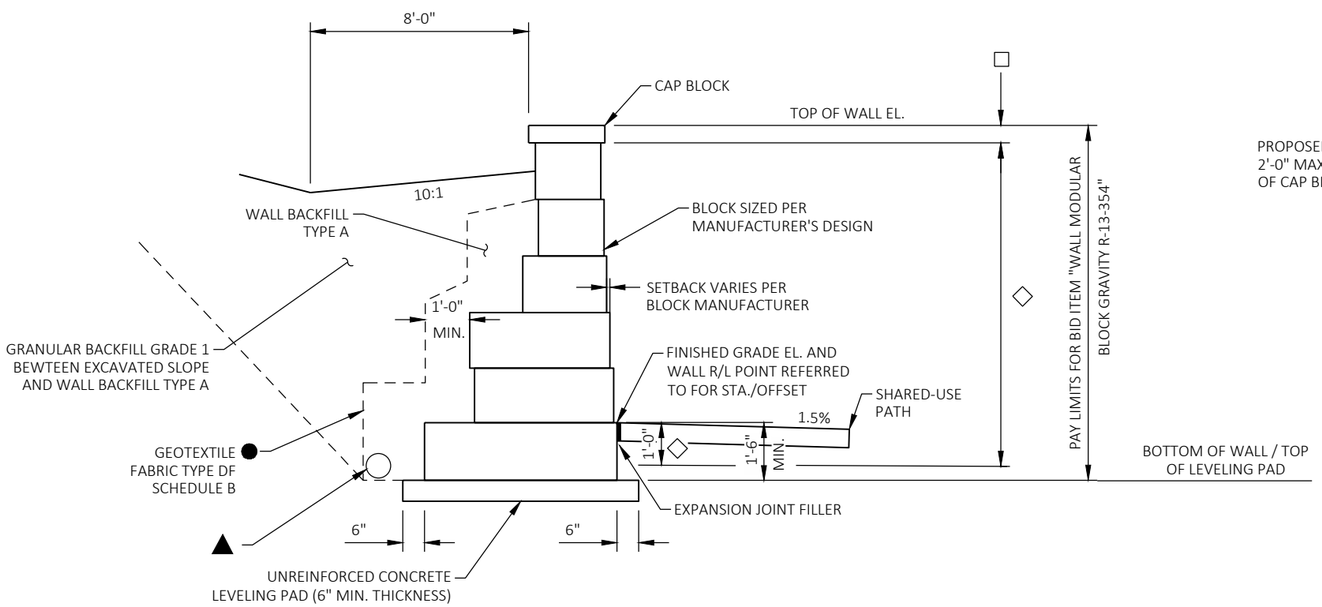

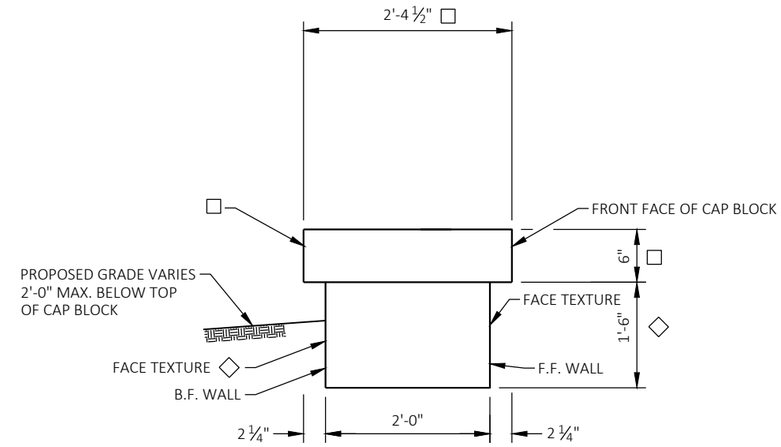

CAP BLOCK DETAIL

LEGEND

- ▲ PIPE UNDERDRAIN WRAPPED 6-INCH, SLOPE 0.5% MIN. TO SUITABLE DRAINAGE. ATTACH END CAP AT HIGH END OF PIPE UNDERDRAIN. CONNECT TO STORM SEWER.
- ● GEOTEXTILE FABRIC SHALL COMPLETELY SEPARATE WALL BACKFILL TYPE A FROM BACKFILL ON ALL SIDES.
- □ APPLY CONCRETE STAINING TO ALL COPING FACES. COLOR SHALL BE FEDERAL COLOR NO. 26134.
- ◇ APPLY CONCRETE STAINING FROM TOP OF BLOCK TO 1'-0" BELOW FINISHED GRADE ELEVATION, FRONT AND BACK FACE OF WALL. COLOR SHALL BE FEDERAL COLOR NO. 33448.

KL Engineering
[A] Better Experience
5400 King James Way
Suite 200
Madison, WI. 53719
Phone: (608) 663-1218
Phone: (800)-810-4012
http://klengineering.com
email@klengineering.com

CITY OF FITCHBURG

TYPICAL SECTION AND DETAILS R-13-354

Project No:	19-3488
Date:	OCT 2019
Designed By:	CAH
Drafted By:	STD
Checked By:	CDH

Revisions:

SHEET NO.

2 OF 4

PLOT DATE : 7/28/2019 12:31 PM
PLOT BY : SCOTT DEMEUSE

SOIL PARAMETERS

*DESIGN WALLS FOR THESE VALUES.

STRATUM LOCATION & SOIL DESIGN	TOTAL UNIT WEIGHT (PCF)	FRACTION ANGLE (DEGREES)	COHESION (PCF)
RETAINED SOIL (GRANULAR BACKFILL) *	135.0	30	0
BORING 6-2 (STA. 525+89NB, 51' RT)			
LEAN CLAY (CL) 923.7 FT - 922.5 FT	125.0	0	500
SILTY SAND WITH GRAVEL (SM) 922.5 FT - 918.2 FT	125.0	35	0
LEAN CLAY (CL) 918.2 FT - 917.5 FT	133.0	0	2,100
SILTY SAND WITH GRAVEL (SM) 917.5 FT - 915.7 FT	135.0	35	0
POORLY-GRADED SAND (SP) 915.7 FT - 913.2 FT	138.0	36	0
POORLY-GRADED SAND (SP) 913.2 FT - 906.7 FT	138.0	33	0
POORLY-GRADED SAND (SP) 906.7 FT - 898.7	144.0	39	0
BORING 6-1 (STA. 527+80NB, 57'RT)			
LEAN CLAY (CL) 928.0 FT - 927.0 FT	125.0	0	500
LEAN CLAY (CL) 927.0 FT - 925.0 FT	129.0	0	1,300
POORLY-GRADED SAND WITH SILT (SP-SM) 925.0 FT - 915.0 FT	136.0	33	0
POORLY-GRADED SAND WITH GRAVEL (SP) 915.0 FT - 912.0 FT	136.0	38	0
POORLY-GRADED SAND WITH SILT (SP-SM) 912.0 FT - 904.0 FT	143.0	44	0
SILTY SAND WITH GRAVEL & COBBLES (SM) 904.0 FT - 903.0 FT	135.0	40	0

WALL EXTERNAL & OVERALL STABILITY EVALUATION

RETAINING WALL DIMENSIONS				
WALL CROSS-SECTION STATION	10+20	11+70	12+00	
APPLICABLE BORINGS [1]	6-1	6-2	6-2	
LIVE LOAD SURCHARGE (PSF)	100	100	100	
DEAD LOAD SURCHARGE (PSF)	0	0	0	
TOTAL WALL HEIGHT (FT)	9.69	11.02	5.08	
EXPOSED WALL HEIGHT (FT)	8.19	9.52	3.58	
WALL EMBEDMENT (FT)	1.50	1.50	1.50	
BOTTOM BLOCK DEPTH (IN)	66/60	72/66	39	
WALL BATTER (DEGREES)[2]	3.6/7.2	3.6/7.2	3.6/7.2	
RETAINING WALL EXTERNAL STABILITY ANALYSES RESULTS				
SLIDING (CDR > 1.0)	1.3/1.2	1.1	1.1/1.2	
ECCENTRICITY (CDR > 1.0)	1.1/1.2	1.0/1.1	1.2/1.7	
GLOBAL STABILITY (CDR > 1.0) [3]	--	1.9	--	
BEARING RESISTANCE (CDR > 1.0)	2.0/2.3	1.2/1.4	1.8/2.9	
REQUIRED BEARING RESISTANCE (PSF)	5900/6000	4500/4700	2600/3300	
SETTLEMENT (IN)	<0.5	<0.5/0.5	<0.5	

NOTES:

[1] IF MORE THAN ONE BORING IS LISTED, THEN THE COMPOSITE SOIL VALUES WERE USED FOR ANALYSES.

[2] THE WALL BATTER IS MEASURED FROM THE VERTICAL.

[3] GLOBAL STABILITY IS ONLY EVALUATED AT THE CRITICAL WALL LOCATION.

CDR = CAPACITY DEMAND RATIO PSF = POUNDS PER SQUARE FOOT

GEOMETRY TABLE

* R-13-354 WALL ALIGNMENT IS PARALLEL WITH FHR NB ALIGNMENT. OFFSET 51.50'

DESCRIPTION	FHR NB STA	WALL STA	TOP WALL EL	F.F. FINISHED GRADE	B.F. FINISHED GRADE
BEGIN WALL	525+69.69	9+90.00	930.31	927.74	929.14
STEP	525+75.57	9+95.73	930.31	927.13	929.67
	525+75.57	9+95.73	931.81	927.13	929.67
	525+79.84	10+00.00	931.81	926.48	930.11
	526+04.84	10+25.00	931.81	922.85	931.10
	526+29.84	10+50.00	931.81	922.76	931.00
	526+54.84	10+75.00	931.81	922.36	930.94
	526+79.84	11+00.00	931.81	921.96	930.85
	527+04.84	11+25.00	931.81	921.59	930.77
	527+29.84	11+50.00	931.81	921.25	930.69
STEP	527+52.38	11+72.54	931.81	920.88	929.11
	527+52.38	11+72.54	930.31	920.88	929.11
	527+54.84	11+75.00	930.31	920.80	928.46
STEP	527+58.15	11+78.31	930.31	920.75	927.86
	527+58.15	11+78.31	928.81	920.75	927.86
STEP	527+63.91	11+84.07	928.81	920.67	926.60
	527+63.91	11+84.07	927.31	920.67	926.60
STEP	527+69.68	11+89.84	927.31	920.60	925.33
	527+69.68	11+89.84	925.81	920.60	925.33
STEP	527+75.44	11+95.60	925.81	920.51	924.07
	527+75.44	11+95.60	924.31	920.51	924.07
	527+79.84	12+00.00	924.31	920.44	923.00
STEP	527+81.21	12+01.37	924.31	920.43	922.52
	527+81.21	12+01.37	922.81	920.43	922.52
END WALL	527+86.97	12+07.13	922.81	920.35	920.80

KL Engineering
[A] Better Experience
5400 King James Way
Suite 200
Madison, WI. 53719
Phone: (608) 663-1218
Phone: (800)-810-4012
http://klengineering.com
email@klengineering.com

CITY OF FITCHBURG

WALL GEOMETRY & SOIL PROPERTIES R-13-354

Project No: 19-3488
Date: OCT 2019
Designed By: CAH
Drafted By: STD
Checked By: CDH

Revisions:

SHEET NO.
3 OF 4

FILE NAME : G:\FITCHBRG\18013-000\CIVIL3D\SHEETSPLAN\STRUCTURES CAD\080303-GN.DWG

BORING #	DATE COMPLETED	EASTING (Y)	NORTHING (X)
BORING 6-1	7/02/2019	461,077.748	810,251.470
BORING 6-2	7/02/2019	461,182.182	810,412.089
BORINGS COMPLETED BY: SOILS & ENGINEERING SERVICES, INC.			
REPORT COMPLETED BY: SOILS & ENGINEERING SERVICES, INC.			
ALL COORDINATES REFERENCED TO WCCS NAD DANE COUNTY			

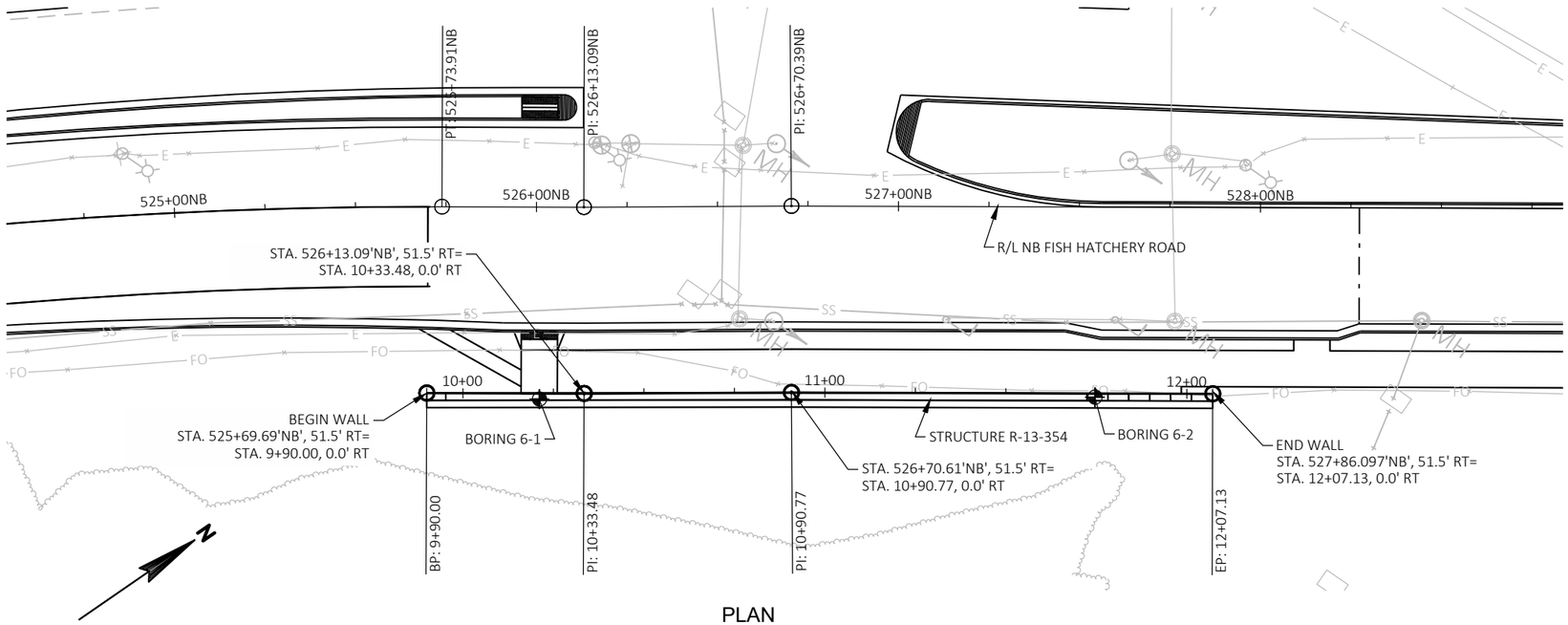

PLAN

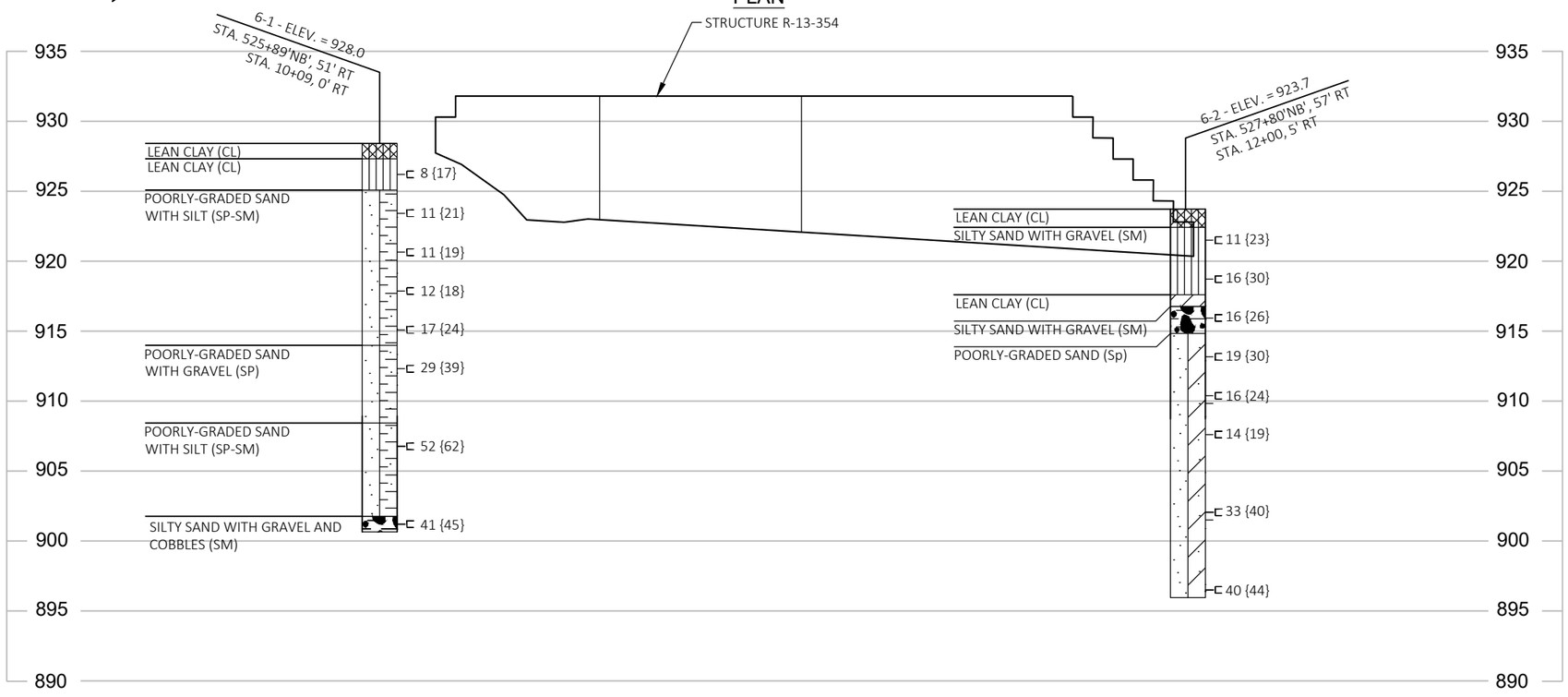

MATERIAL SYMBOLS

ASPHALT, TOPSOIL, PEAT, CONCRETE, FILL, GRAVEL, SAND, CLAY, SILT, BOULDERS OR COBBLES, LIMESTONE, BEDROCK (UNKNOWN), SHALE, SANDSTONE, IGNEOUS/ META

LEGEND OF BORING

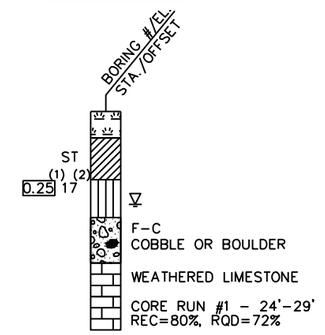

(1) UNCONFINED STRENGTH, AS DETERMINED BY A POCKET PENETROMETER (TSF)

(2) UNLESS OTHERWISE, SPECIFIED THE SPT 'N' VALUE IS BASED ON AASHTO T-206, STANDARD PENETRATION TEST. THE SPT 'N' VALUE PRESENTED HAS NOT BEEN CORRECTED FOR OVERBURDEN PRESSURE OR HAMMER EFFICIENCY.

GROUND WATER ELEVATION

- AT TIME OF DRILLING
- END OF DRILLING
- AFTER DRILLING

ABBREVIATIONS

F-FINE M-MEDIUM C-COARSE ST-SHELBY TUBE

SUBSURFACE EXPLORATION FOR FOUNDATION DESIGN AND BIDDERS INFORMATION

BORINGS WERE COMPLETED AT POINTS APPROXIMATELY AS INDICATED ON THIS DRAWING TO OBTAIN INFORMATION CONCERNING THE CHARACTER OF SUBSURFACE MATERIALS FOUND AT THE SITE. BECAUSE THE INVESTIGATED DEPTHS ARE LIMITED AND THE AREA OF THE BORINGS IS VERY SMALL IN RELATION TO THE ENTIRE SITE, THE WISCONSIN DEPARTMENT OF TRANSPORTATION DOES NOT WARRANT SIMILAR SUBSURFACE CONDITIONS BELOW, BETWEEN, OR BEYOND THESE BORINGS. VARIATIONS IN SOIL CONDITIONS SHOULD BE EXPECTED AND FLUCTUATIONS IN GROUNDWATER LEVELS MAY OCCUR.

KL Engineering
[A] Better Experience
5400 King James Way
Suite 200
Madison, WI. 53719
Phone: (608) 663-1218
Phone: (800)-810-4012
http://klengineering.com
email@klengineering.com

CITY OF FITCHBURG

SUBSURFACE EXPLORATION R-13-354

Project No:	19-3488
Date:	OCT 2019
Designed By:	CAH
Drafted By:	STD
Checked By:	CDH

Revisions:

SHEET NO.

4 OF 4

PLOT DATE : 7/29/2019 8:38 AM
PLOT BY : COLE HERNIKL
FILE NAME : G:\FITCHBRG\18013-000\CIVIL3D\SHEETSPLAN\STRUCTURES CAD\080304-SE.DWG

PLOT DATE : 12/13/2019 11:20 AM

PLOT BY : JENNIFER LAUER

FILE NAME : G:\FITCHBRG\18013-000\CIVIL3D\SHEETSPLAN\STRUCTURES CAD\080401-GP.DWG

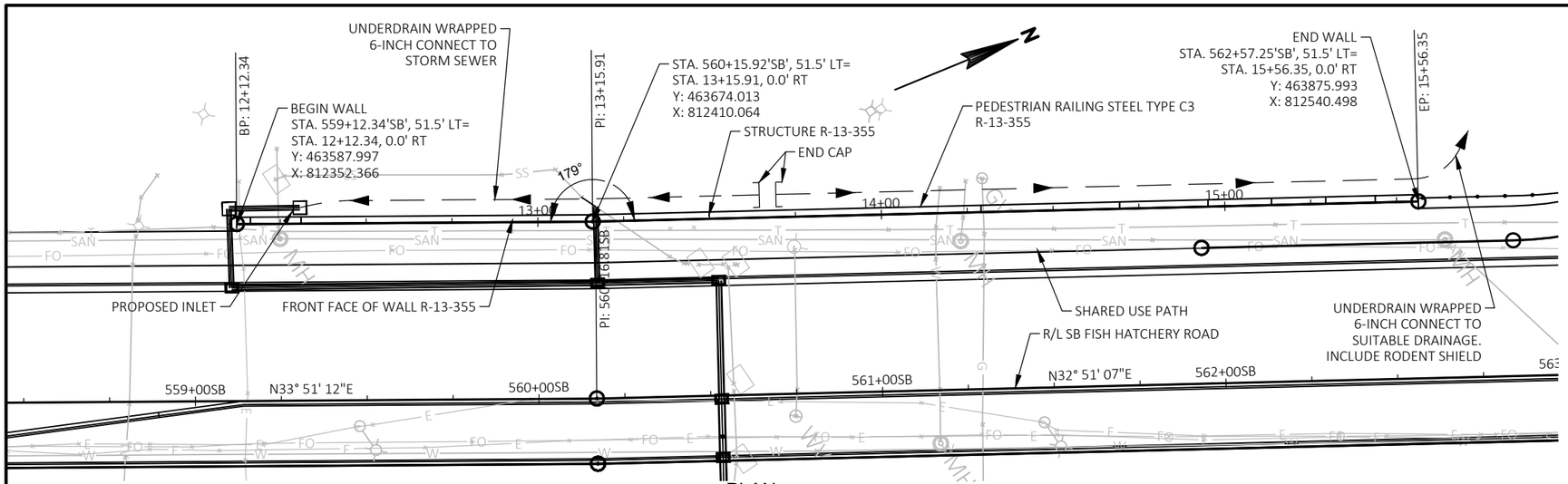

PLAN

(WALL MODULAR BLOCK GRAVITY LRFD, R-13-355)

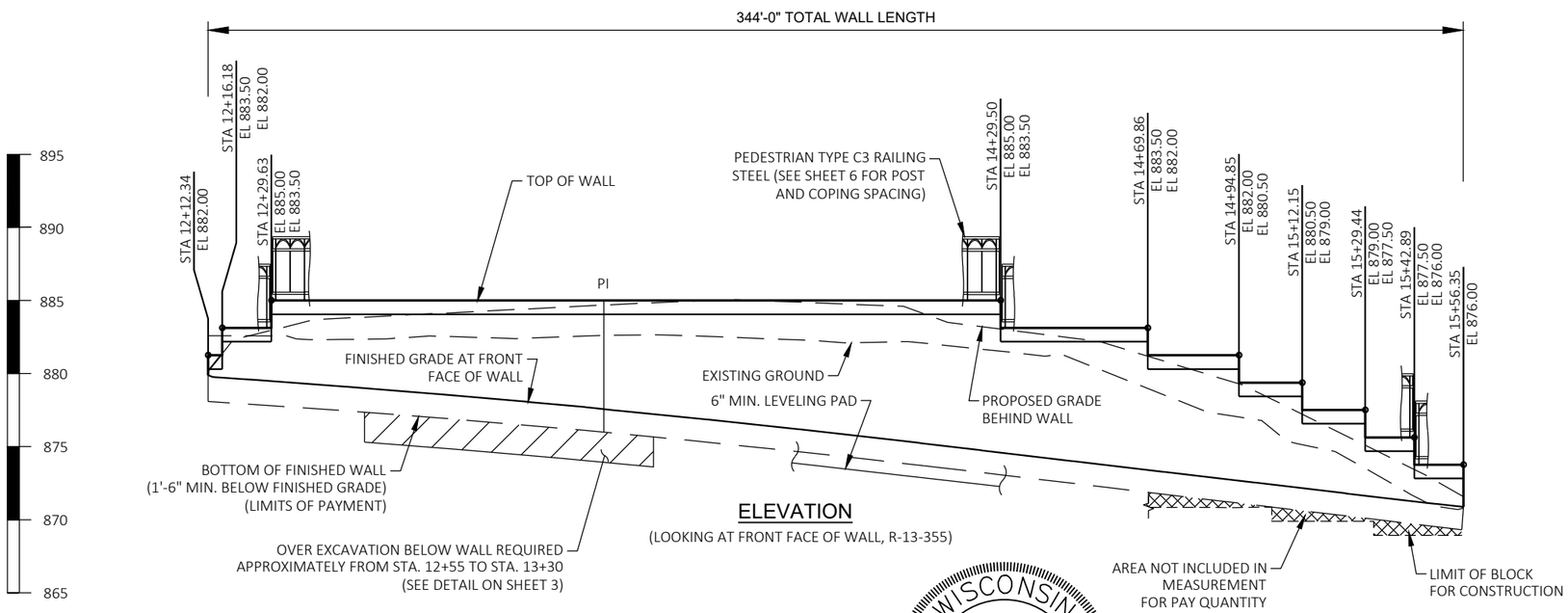

ELEVATION

(LOOKING AT FRONT FACE OF WALL, R-13-355)

GENERAL NOTES

DRAWINGS SHALL NOT BE SCALED

THE PLAN QUANTITY FOR THE BID ITEM "WALL MODULAR BLOCK GRAVITY LRFD R-13-355" IS BASED ON A WALL HEIGHT MEASURED FROM THE TOP OF THE WALL TO A CONSTANT DEPTH OF 1'-6" BELOW FINISHED GRADE.

BLOCK FACE SHALL HAVE THE APPEARANCE OF REDI-ROCK LEDGE STONE OR APPROVED EQUAL. WALL CONCRETE STAINING COLOR TO BE FEDERAL COLOR NO. 33448. COPING CONCRETE STAINING COLOR TO BE FEDERAL COLOR NO. 26134.

EXCAVATION FOR WALL IS INCLUDED WITH ITEM "WALL MODULAR BLOCK GRAVITY LRFD R-13-355".

ALL STATION AND ALL ELEVATIONS ARE IN FEET.

ALL DIMENSIONS AND STATIONING ARE ALONG THE FRONT FACE OF WALL AT FINISHED GROUND, UNLESS SHOWN OTHERWISE.

DESIGN DATA

THE CONTRACTOR SHALL PROVIDE COMPLETE DESIGN, PLANS, DETAILS, SPECIFICATIONS, AND SHOP DRAWINGS FOR THE RETAINING WALLS IN ACCORDANCE WITH THE SPECIAL PROVISIONS. THE RETAINING WALL MANUFACTURER SHALL PROVIDE TECHNICAL ASSISTANCE TO THE CONTRACTOR DURING CONSTRUCTION. THE COST OF FURNISHING THESE ITEMS SHALL BE INCLUDED IN THE BID ITEM "WALL MODULAR BLOCK GRAVITY LRFD R-13-355".

PLANS, ELEVATIONS AND DETAILS SHOWN ON THESE DRAWINGS ARE INTENDED TO INDICATE WALL LOCATIONS, LENGTHS, HEIGHTS, AND DETAILS COMMON TO THE WALL SYSTEM SELECTED. THE CONTRACTOR SHALL VERIFY THAT THE WALL SYSTEM SELECTED WILL CONFORM TO THE REQUIRED ALIGNMENTS AND DETAILS.

THE RETAINING WALL IS TO BE DESIGNED USING ELEVATIONS GIVEN ON THIS SHEET AND IN THE GEOMETRY TABLE ON SHEET 3.

DESIGN FOR RETAINING WALL TO PROVIDE FOR FINISHED GRADE SLOPED BEHIND WALL AS SHOWN ON THE TYPICAL WALL SECTION AND ROADWAY CROSS SECTIONS.

DESIGN RETAINING WALL FOR A LIVE LOAD OF 100 PSF.

CONTRACTOR TO VERIFY STEP LOCATIONS BASED ON BLOCK LENGTHS USED. WALL WAS DESIGNED USING REDI-ROCK BLOCK DIMENSIONS. ADJUST COPING AND RAIL SPACING ACCORDINGLY.

LIST OF DRAWINGS

1. GENERAL PLAN
2. TYPICAL SECTIONS AND DETAILS
3. WALL GEOMETRY AND DETAILS
4. SOIL PARAMETERS AND WALL STABILITY
5. RAILING STEEL PEDESTRIAN TYPE C3
6. RAILING DETAILS
7. SUBSURFACE EXPLORATION

STRUCTURE DESIGN CONTACT
CHAD HALVERSON (608) 663-1218

TOTAL ESTIMATED QUANTITIES

BID ITEM NO.	BID ITEMS	UNIT	TOTAL
503.0	BASE AGGREGATE DENSE 3-INCH	TON	355
648.2	PIPE UNDERDRAIN WRAPPED 6-INCH	LF	384
902.18.03	RAILING STEEL PEDESTRIAN TYPE C3 R-13-355	LF	337
902.19.03	CONCRETE STAINING R-13-355	SF	3,690
902.20.03	WALL MODULAR BLOCK GRAVITY LRFD, R-13-355	SF	2,504

WISCONSIN
CHAD D. HALVERSON
E-34364
MADISON, WI
PROFESSIONAL ENGINEER

December 13, 2019

BENCHMARK TABLE

NO.	STATION	OFFSET	DESCRIPTION	ELEV.
56	556+04.33'SB'	65.92' LT	SOUTH CORNER OF CONCRETE BASE LIGHT POST	882.01
57	563+59.29'SB'	64.92' RT	SOUTHEAST CORNER OF CONCRETE PARAPET, B-13-327	872.45

KL Engineering
[A] Better Experience
5400 King James Way
Suite 200
Madison, WI. 53719
Phone: (608) 663-1218
Phone: (800)-810-4012
http://klengineering.com
email@klengineering.com

CITY OF FITCHBURG

GENERAL PLAN R-13-355

Project No:	18013
Date:	7-29-2019
Designed By:	CAH
Drafted By:	STD
Checked By:	CDH

Revisions:

SHEET NO.

1 OF 7

PLOT DATE : 7/19/2019 6:51 AM

PLOT BY : SCOTT DEMEUSE

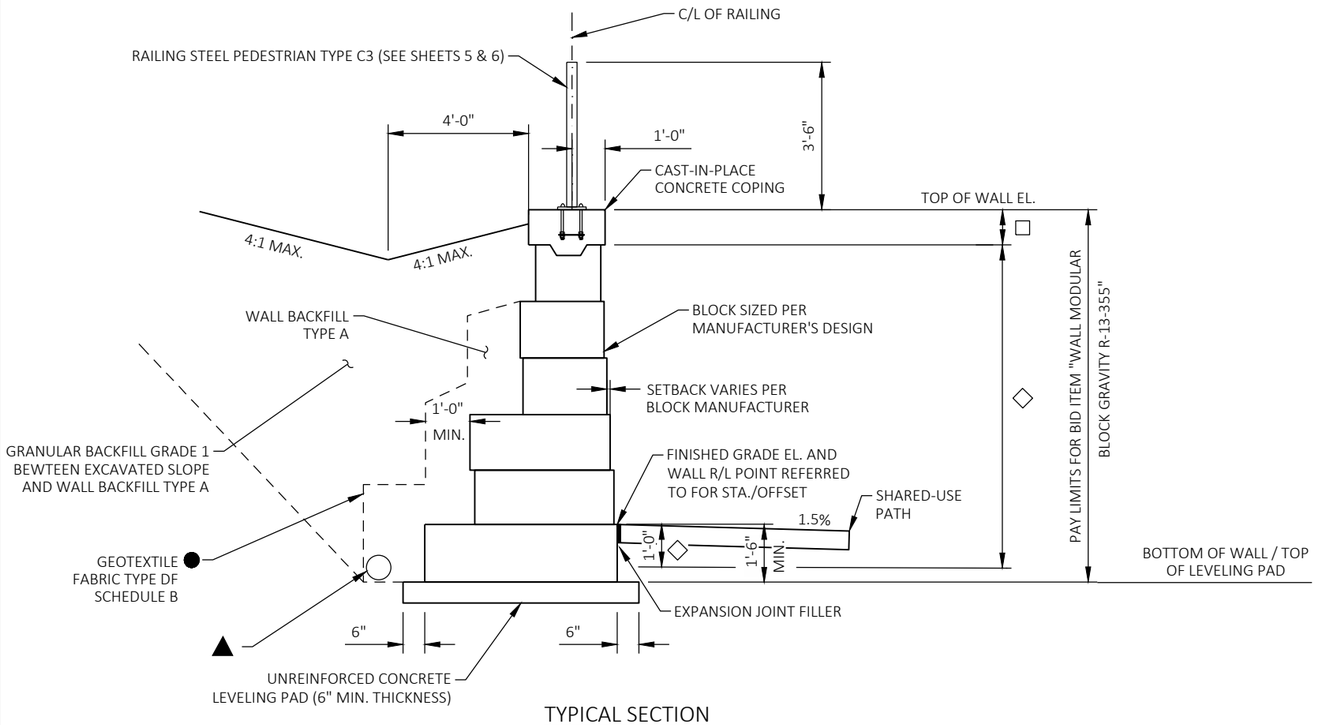

TYPICAL SECTION

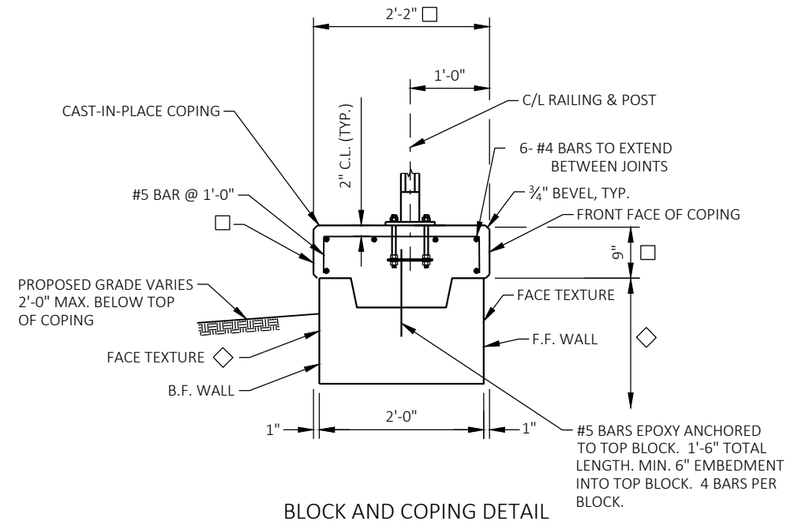

BLOCK AND COPING DETAIL

LEGEND

- ▲ PIPE UNDERDRAIN WRAPPED 6-INCH, SLOPE 0.5% MIN. TO SUITABLE DRAINAGE. ATTACH END CAP AT HIGH END OF PIPE UNDERDRAIN. ATTACH RODENT SHIELD AT OUTLET END OF PIPE UNDERDRAIN. SEE DETAILS ON SHEET 3.
- ● GEOTEXTILE FABRIC SHALL COMPLETELY SEPARATE WALL BACKFILL TYPE A FROM BACKFILL ON ALL SIDES.
- □ APPLY CONCRETE STAINING TO ALL COPING FACES. COLOR SHALL BE FEDERAL COLOR NO. 26134.
- ◇ APPLY CONCRETE STAINING FROM TOP OF BLOCK TO 1'-0" BELOW FINISHED GRADE ELEVATION, FRONT AND BACK FACE OF WALL. COLOR SHALL BE FEDERAL COLOR NO. 33448.
- ▼ SEAL ALL EXPOSED HORIZ. & VERT. SURFACES OF FILLER WITH NON-STAINING GRAY NON-BITUMINOUS JOINT SEALER. (1" DEEP AND HOLD ⅛" BELOW SURFACE OF CONCRETE)

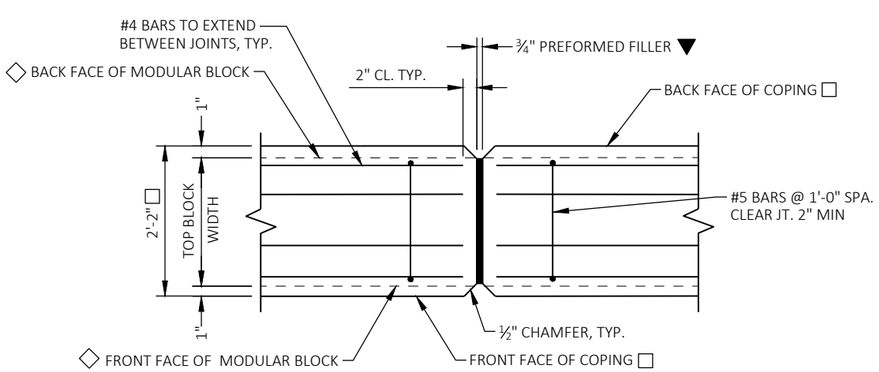

COPING EXPANSION JOINT

DO NOT RUN BAR STEEL THRU JOINT
HORIZ. SPA. OF JOINT = 50'-0"
(SEE SHEET 6 FOR EXPANSION JOINT LOCATIONS)

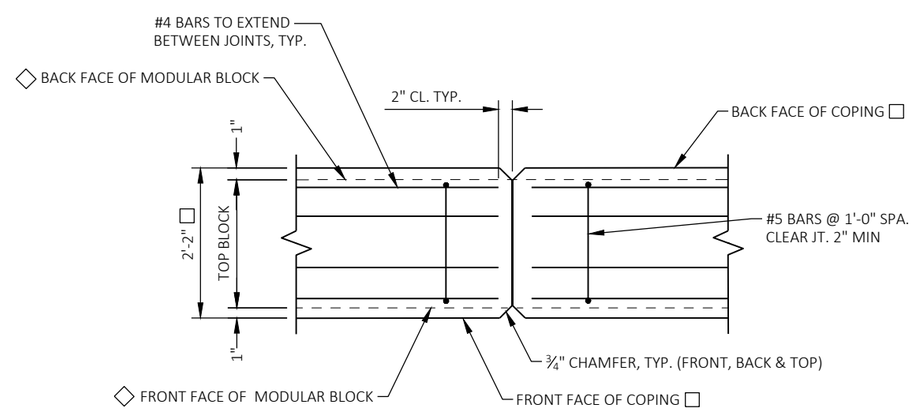

COPING CONTRACTION JOINT

DO NOT RUN BAR STEEL THRU JOINT
HORIZ. SPA. OF JOINT = 12'-0"

KL Engineering
[A] Better Experience
5400 King James Way
Suite 200
Madison, WI. 53719
Phone: (608) 663-1218
Phone: (800)-810-4012
http://klengineering.com
email@klengineering.com

CITY OF FITCHBURG

TYPICAL SECTION AND DETAILS R-13-355

Project No:	19-3488
Date:	OCT 2019
Designed By:	CAH
Drafted By:	STD
Checked By:	CDH

Revisions:

SHEET NO.

2 OF 7

FILE NAME : G:\FITCHBRG\18013-000\CIVIL3D\SHEETSPLAN\STRUCTURES CAD\080402-XS.DWG

PLOT DATE : 7/28/2019 12:33 PM
PLOT BY : SCOTT DEMEUSE
FILE NAME : G:\FITCHBRG\18013-000\CIVIL3D\SHEETSPLAN\STRUCTURES CAD\080403-GN.DWG

GEOMETRY TABLE

* R-13-355 WALL ALIGNMENT IS PARALLEL WITH FHR NB ALIGNMENT. OFFSET 51.50'

DESCRIPTION	FHR SB STA	WALL STA	TOP WALL EL	F.F. FINISHED GRADE	B.F. FINISHED GRADE
BEGIN WALL	559+12.34	12+12.34	882.00	880.90	881.14
STEP	559+16.18	12+16.18	882.00	880.77	882.00
	559+16.18	12+16.18	883.50	880.77	882.00
	559+25.00	12+25.00	883.50	880.65	883.18
STEP	559+29.63	12+29.63	883.50	880.58	883.41
	559+29.63	12+29.63	885.00	880.58	883.41
	559+50.00	12+50.00	885.00	880.28	884.13
	559+75.00	12+75.00	885.00	879.88	884.34
	560+00.00	13+00.00	885.00	879.45	884.54
	560+25.90	13+25.00	885.00	878.98	884.75
	560+50.90	13+50.00	885.00	878.48	884.95
	560+75.90	13+75.00	885.00	877.93	884.85
	561+00.90	14+00.00	885.00	877.39	884.70
	561+25.90	14+25.00	885.00	876.80	883.56
STEP	561+30.40	14+29.50	885.00	876.67	883.44
	561+30.40	14+29.50	883.50	876.67	883.44
	561+50.90	14+50.00	883.50	876.21	882.80
STEP	561+70.76	14+69.86	883.50	875.72	881.86
	561+70.76	14+69.86	882.00	875.72	881.86
	561+75.90	14+75.00	882.00	875.61	881.56
STEP	561+95.75	14+94.85	882.00	875.13	880.40
	561+95.75	14+94.85	880.50	875.13	880.40
	562+00.90	15+00.00	880.50	875.02	879.92
STEP	562+13.05	15+12.15	880.50	874.72	878.75
	562+13.05	15+12.15	879.00	874.72	878.75
	562+25.90	15+25.00	879.00	874.43	877.49
STEP	562+30.34	15+29.44	879.00	874.31	877.05
	562+30.34	15+29.44	877.50	874.31	877.05
STEP	562+43.79	15+42.89	877.50	874.00	875.74
	562+43.79	15+42.89	876.00	874.00	875.74
	562+50.90	15+50.00	876.00	873.86	874.89
END WALL	562+57.25	15+56.35	876.00	873.70	874.25

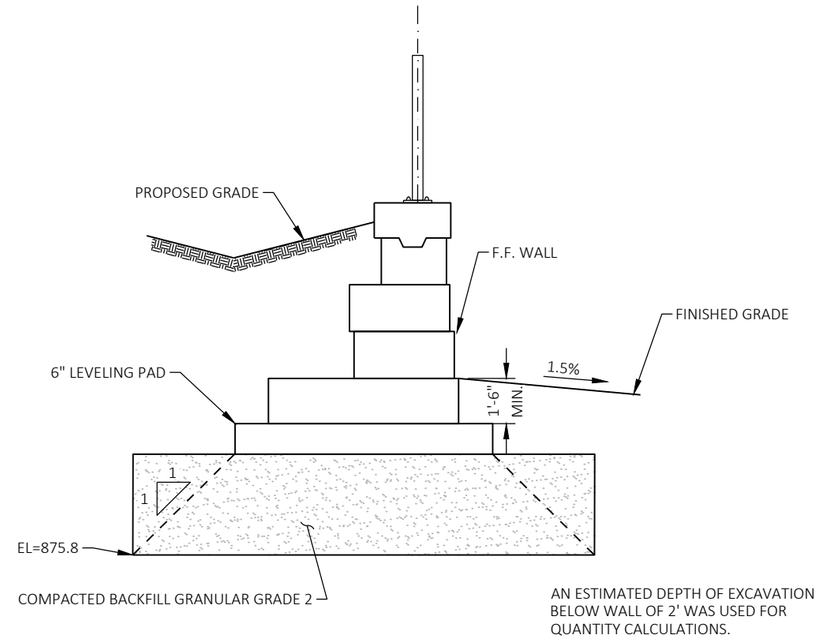

EXCAVATION BELOW WALL DETAIL

STA. 12+55 - STA. 13+30

OVER EXCAVATE UNSUITABLE MATERIAL AS DIRECTED BY THE ENGINEER AND BACKFILL WITH BASE AGGREGATE DENSE 3-INCH. OVER EXCAVATION IS INCLUDED IN THE BID ITEM "WALL MODULAR BLOCK GRAVITY LRFD, R-13-355".

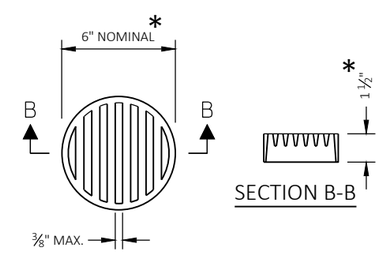

RODENT SHIELD DETAIL

* DIMENSIONS ARE APPROXIMATE. THE GRATE IS SIZED TO FIT INTO A PIPE COUPLING. ORIENT SO SLOTS ARE VERTICAL. THE RODENT SHIELD, PIPE COUPLING AND SCREWS SHALL BE CONSIDERED INCIDENTAL TO THE BID ITEM "WALL MODULAR BLOCK GRAVITY LRFD, R-13-355". THE RODENT SHIELD SHALL BE A PVC GRATE SIMILAR TO THIS DETAIL. THE GRATE IS COMMERCIALLY AVAILABLE AS A FLOOR STRAINER. A PIPE COUPLING IS REQUIRED FOR THE ATTACHMENT OF THIS SHIELD TO THE EXPOSED END OF THE PIPE UNDERDRAIN. THE SHIELD SHALL BE FASTENED TO THE PIPE COUPLING WITH TWO OR MORE NO. 10 X 1-INCH STAINLESS STEEL SHEET METAL SCREWS.

KL Engineering
[A] Better Experience
5400 King James Way
Suite 200
Madison, WI. 53719
Phone: (608) 663-1218
Phone: (800)-810-4012
http://klengineering.com
email@klengineering.com

CITY OF FITCHBURG

WALL GEOMETRY AND DETAILS R-13-355

Project No:	19-3488
Date:	OCT 2019
Designed By:	CAH
Drafted By:	STD
Checked By:	CDH

Revisions:

SHEET NO.

3 OF 7

PLOT DATE : 7/26/2019 7:21 AM
PLOT BY : SCOTT DEMEUSE
FILE NAME : G:\FITCHBRG\18013-000\CIVIL3D\SHEETSPLAN\STRUCTURES CAD\080404-GN.DWG

SOIL PARAMETERS

*DESIGN WALLS FOR THESE VALUES.

STRATUM LOCATION & SOIL DESIGN	TOTAL UNIT WEIGHT (PCF)	FRACTION ANGLE (DEGREES)	COHESION (PCF)
RETAINED SOIL (GRANULAR BACKFILL) *	135.0	30	0
BORING 1 (STA. 559+31'SB', 55' LT)			
LEAN CLAY (CL) 883.7 FT - 881.7 FT	125.0	0	500
SILTY GRAVEL WITH SAND (GM/SM) 881.7 FT - 878.2 FT	125.0	31	0
LEAN CLAY (CL) 878.2 FT - 875.7 FT	133.0	0	800
POORLY-GRADED SAND WITH SILT (SP/SM) 875.7 FT - 873.2 FT	136.0	31	0
LEAN CLAY (CL) 873.2 FT - 869.7 FT	133.0	0	2,800
POORLY-GRADED SAND WITH GRAVEL (SP) 869.7 FT - 868.7 FT	138.0	39	0
BORING 2 (STA. 559+88'SB', 55' LT)			
LEAN CLAY (CL) 883.5 FT - 882.8 FT	125.0	0	500
SANDY LEAN CLAY (CL/SC) 882.8 FT - 879.0 FT	129.0	0	2,000
LEAN CLAY (CL) 879.0 FT - 878.0 FT	133.0	0	3,000
LEAN CLAY (CL) 878.0 FT - 873.0 FT	133.0	0	400
LEAN CLAY (CL) 873.0 FT - 870.5 FT	134.0	0	1,200
LEAN CLAY WITH COBBLES (CL) 870.5 FT - 868.5 FT	133.0	0	1,700
BORING 3 (STA. 560+80'SB', 53' LT)			
LEAN CLAY (CL) 883.2 FT - 882.9 FT	125.0	0	500
LEAN CLAY (CL) 882.9 FT - 877.7 FT	129.0	0	2,000
LEAN CLAY (CL) 877.7 FT - 875.2 FT	134.0	0	2,400
POORLY-GRADED SAND WITH SILT (SP/SM) 875.2 FT - 872.7 FT	136.0	32	0
LEAN CLAY (CL) 872.7 FT - 870.2 FT	134.0	0	3,000
SILTY SAND WITH GRAVEL & COBBLES (SM) 870.2 FT - 863.2 FT	135.0	37	0
BORING 4 (STA. 561+75'SB', 52' LT)			
LEAN CLAY (CL) 880.7 FT - 880.4 FT	125.0	0	500
SILT SAND WITH GRAVEL 880.4 FT - 877.7 FT	125.0	31	0
877.7 FT - 875.2 FT	125.0	34	0
SILTY SAND WITH GRAVEL & COBBLES (SM) 875.2 FT - 870.2 FT	135.0	33	0
870.2 FT - 863.7 FT	135.0	38	0
863.7 FT - 855.7 FT	135.0	35	0

WALL EXTERNAL & OVERALL STABILITY EVALUATION

RETAINING WALL DIMENSIONS				
WALL CROSS-SECTION STATION	12+30	12+80	13+79	14+79
APPLICABLE BORINGS [1]	1	2	3	4
LIVE LOAD SURCHARGE (PSF)	100	100	100	100
DEAD LOAD SURCHARGE (PSF)	0	0	0	0
TOTAL WALL HEIGHT (FT)	4.28	6.08	8.48	7.30
EXPOSED WALL HEIGHT (FT)	2.78	4.58	6.98	5.80
WALL EMBEDMENT (FT)	1.50	1.50	1.50	1.50
BOTTOM BLOCK DEPTH (IN)	39	45/39	60	60/45
WALL BATTER (DEGREES)[2]	3.6/7.2	3.6/7.2	3.6/7.2	3.6/7.2
RETAINING WALL EXTERNAL STABILITY ANALYSES RESULTS				
SLIDING (CDR > 1.0)	1.1/1.2	1.4/1.4	1.0/1.1	1.3/1.1
ECCENTRICITY (CDR > 1.0)	1.6/2.3	1.1/1.2	1.2/1.7	1.5/1.1
GLOBAL STABILITY (CDR > 1.0) [3]	--	--	3.8	--
BEARING RESISTANCE (CDR > 1.0)	1.8/2.6	1.4/1.6	2.6/3.0	2.7/1.6
REQUIRED BEARING RESISTANCE (PSF)	2100/2500	2600/2900	6800/6300	4800/3300
SETTLEMENT (IN)	1.2/1.2	1.4/1.8	1.2/1.1	<0.5

NOTES:

[1] IF MORE THAN ONE BORING IS LISTED, THEN THE COMPOSITE SOIL VALUES WERE USED FOR ANALYSES.

[2] THE WALL BATTER IS MEASURED FROM THE VERTICAL.

[3] GLOBAL STABILITY IS ONLY EVALUATED AT THE CRITICAL WALL LOCATION.

CDR = CAPACITY DEMAND RATIO PSF = POUNDS PER SQUARE FOOT

KL Engineering
[A] Better Experience
5400 King James Way
Suite 200
Madison, WI. 53719
Phone: (608) 663-1218
Phone: (800)-810-4012
http://klengineering.com
email@klengineering.com

CITY OF FITCHBURG

SOIL PARAMETERS & WALL STABILITY
R-13-355

Project No:	19-3488
Date:	OCT 2019
Designed By:	CAH
Drafted By:	STD
Checked By:	CDH

Revisions:

SHEET NO.

4 OF 7

PLOT DATE : 5/8/2019 9:13 AM
PLOT BY : SCOTT DEMEUSE
FILE NAME : G:\FITCHBRG\18013-000\CIVIL3D\SHEETSPLAN\STRUCTURES CAD\080404-WD.DWG

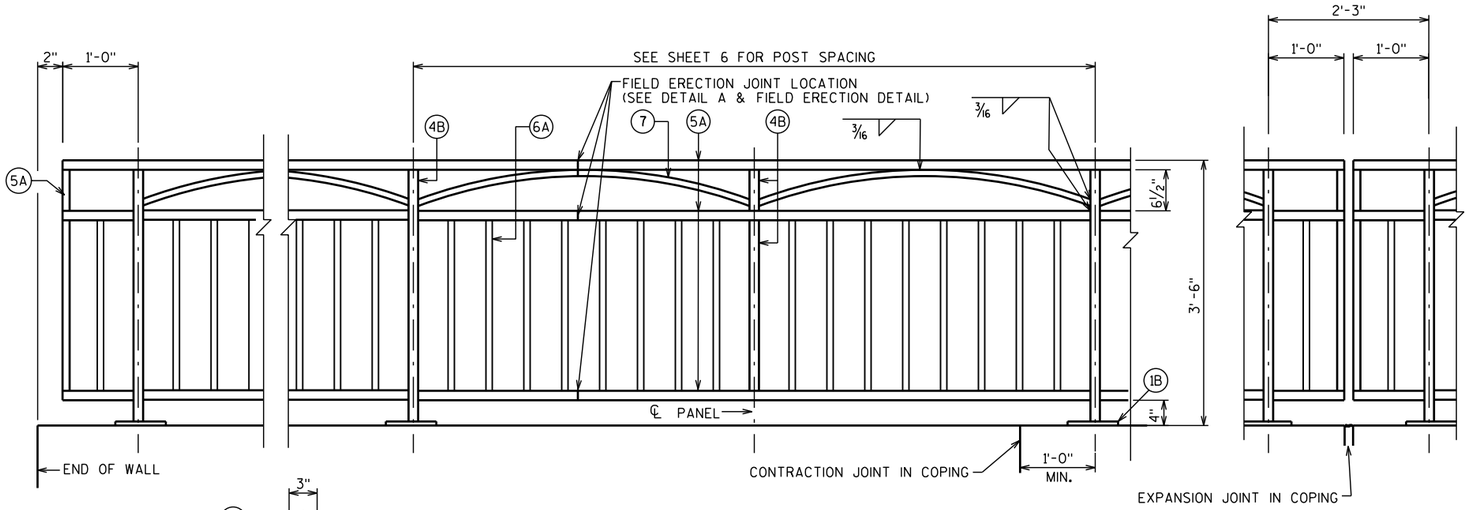

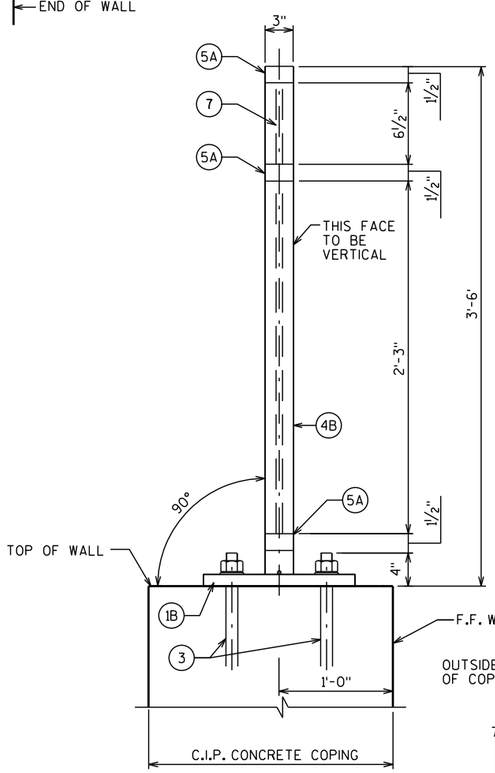

SECTION THRU RAILING

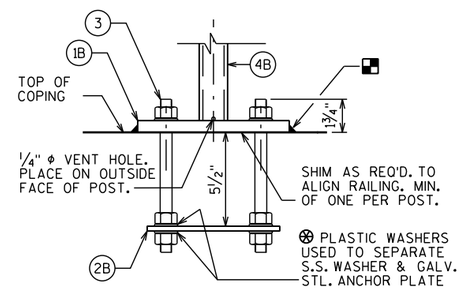

ANCHORAGE FOR RAIL POSTS

NOTE: ANCHOR PLATE NOT REQUIRED WHEN ADHESIVE ANCHORS ARE USED.

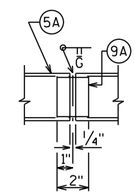

SHOP RAIL SPLICE DETAIL

(LOCATION MUST BE SHOWN ON SHOP DRAWINGS)

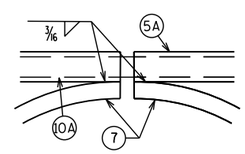

DETAIL A

LEGEND

(1B) PLATE 5/8" X 6" X 10" WITH 3/4" X 1 1/2" SLOTTED HOLES.

(2B) 1/4" X 5" X 9" ANCHOR PLATE WITH 11/16" DIA. HOLE FOR THR'D. RODS NO. 3.

(3) 5/8" DIA. X 9" LONG, TYPE 316 STAINLESS STEEL THREADED RODS (MIN. TENSILE STRENGTH = 70 KSI) WITH NUT AND WASHERS OF SAME ALLOY GROUP. ALTERNATIVE ANCHORAGE: CONCRETE ADHESIVE ANCHORS 5/8-INCH. EMBED 7" IN CONCRETE FOR RAIL POSTS. EMBED 5" IN CONCRETE FOR END RAILS. ADHESIVE ANCHORS SHALL CONFORM TO SECTION 502.2.12 OF THE STANDARD SPECIFICATIONS.

(4B) STRUCTURAL TUBING 3" X 3" X 3/16". PLACE VERTICAL. WELD TO NO. 1 & 5.

(5A) STRUCTURAL TUBING 3" X 1 1/2" X 3/16" RAILS. WELD TO NO. 1 & NO. 4. INSIDE OF TUBE TO BE PAINTED AT ALL FIELD ERECTION & EXPANSION JOINTS.

(6A) BAR 1" X 1" PICKETS. WELD TO NO. 5. (SPACE AT 6" MAX. ℄ TO ℄ SPACING) PLACE VERTICAL.

(7) BAR 1" X 1" BEND TO REQUIRED RADIUS. WELD TO NO. 4B & 5A.

(9A) RECTANGULAR SLEEVE FABRICATED FROM 3/16" PLATES. PROVIDE "SLIDING FIT".

(10A) RECTANGULAR SLEEVE FABRICATED FROM 3/16" PLATES. (1'-4" @ FIELD ERECTION JTS.)

RAILING NOTES

BID ITEM SHALL BE "RAILING STEEL PEDESTRIAN TYPE C3 R-13-355" WHICH SHALL INCLUDE ALL STEEL ITEMS SHOWN.

POST BASE PLATES SHALL BE FLAT WITH ALL SURFACES SMOOTH AND FREE FROM WARP AND ALL EDGES SMOOTH, STRAIGHT AND VERTICAL. ALL PLATE CUTS SHALL BE MACHINE OR MACHINE FLAME CUTS.

ALL PLATES, BARS, AND RECTANGULAR SLEEVES SHALL CONFORM TO ASTM A709 GRADE 36. ALL STRUCTURAL TUBING SHALL CONFORM TO ASTM A500 GRADE B.

ANCHORAGES SHALL BE ACCURATELY PLACED TO PROVIDE CORRECT ALIGNMENT OF RAILING. SET NORMAL TO GRADE.

CUT BOTTOM OF POST TO MAKE POST VERTICAL IN BOTH TRANSVERSE AND LONGITUDINAL DIRECTION.

STEEL SHIMS SHALL BE PROVIDED & USED UNDER BASE PLATES WHERE REQUIRED FOR ALIGNMENT, AND SHALL BE GALVANIZED.

CAULK AROUND PERIMETER OF BASE PLATES, NO. 1, AND FILL BOLT SLOT OPENINGS IN SHIMS AND BASE PLATES WITH NON-STAINING GRAY NON-BITUMINOUS JOINT SEALER.

ALL MATERIAL (EXCEPT NO. 3) SHALL BE GALVANIZED AFTER FABRICATION. PRIOR TO GALVANIZING, THE STEEL RAILING SHALL BE GIVEN A NO. 6 BLAST CLEANING PER SSPC SPECIFICATIONS. PAINT OVER GALVANIZING WITH AN APPROVED TIE COAT AND TOP COAT AS SPECIFIED IN THE CONTRACT DOCUMENTS. THE RAILING SHALL BE PAINTED FEDERAL COLOR NO. 14090.

VENT HOLES SHALL BE DRILLED IN POST AND RAIL MEMBERS AS REQUIRED TO FACILITATE GALVANIZING AND DRAINAGE.

RAILING SHALL BE FABRICATED IN LENGTHS THAT INCLUDE 3 OR 4 POSTS.

TOUCH-UP PAINTING TO BE DONE AT COMPLETION OF STEEL RAILING INSTALLATION TO THE SATISFACTION OF THE ENGINEER AT NO EXTRA COST.

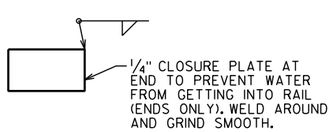

CLOSURE PLUG DETAIL

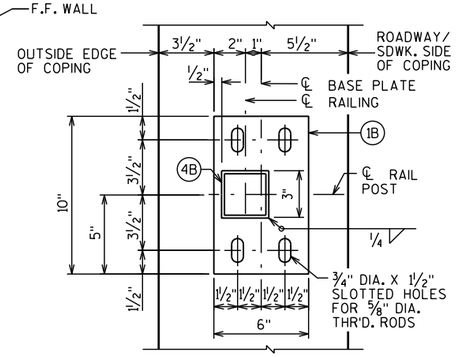

TYPICAL RAIL POST BASE PLATE

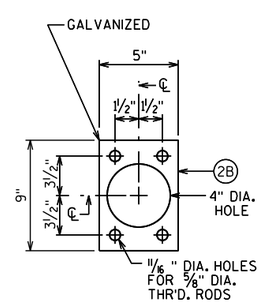

ANCHOR PLATE

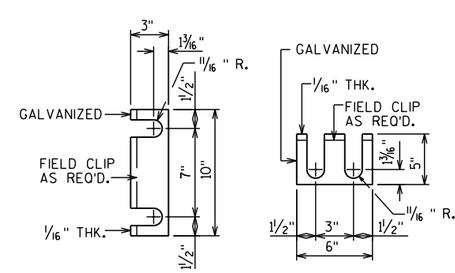

RAIL POST SHIM DETAIL

(2 SETS PER POST)

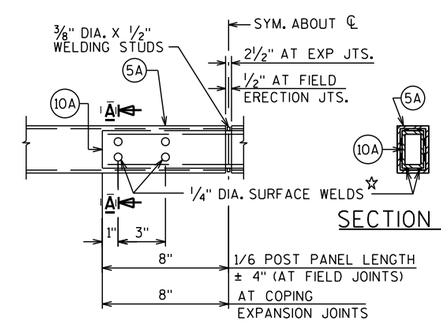

SECTION A-A

FIELD ERECTION JOINT DETAIL

☆ MIN. 5/8" FLAT SURFACE DIA. PUNCHINGS OR STUDS MAY BE USED AS AN ALTERNATE.

KL Engineering
[A] Better Experience
5400 King James Way
Suite 200
Madison, WI. 53719
Phone: (608) 663-1218
Phone: (800)-810-4012
http://klengineering.com
email@klengineering.com

CITY OF FITCHBURG

RAILING STEEL PEDESTRIAN TYPE C3 R-13-355

Project No:	19-3488
Date:	OCT 2019
Designed By:	CDH
Drafted By:	STD
Checked By:	CDH

Revisions:

SHEET NO.

5 OF 7

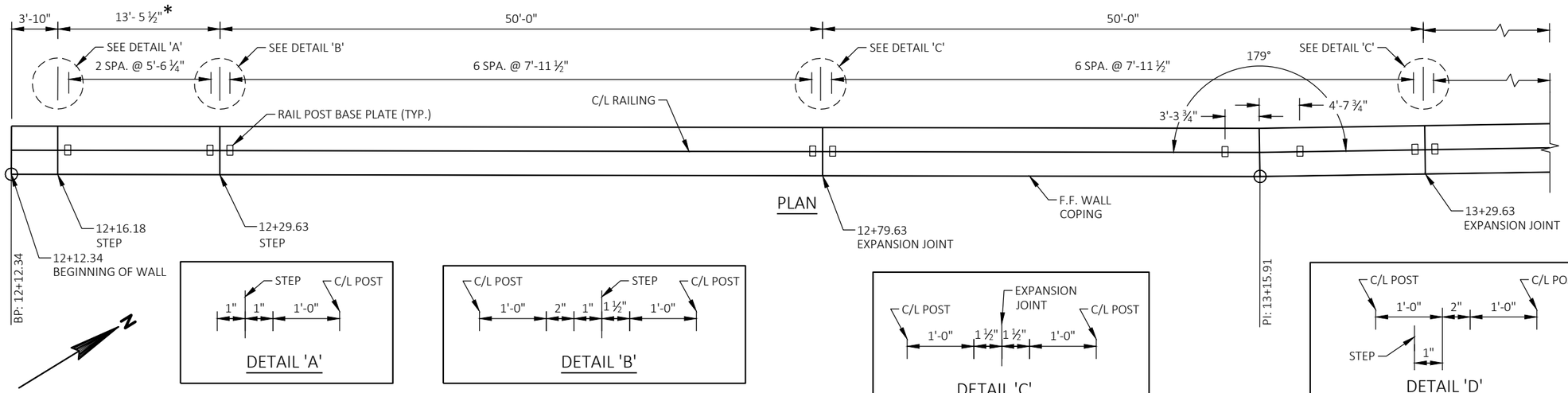

PLAN

DETAIL 'A'

DETAIL 'B'

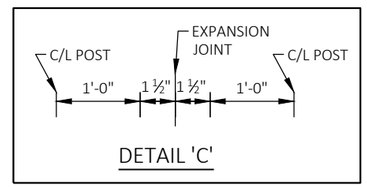

DETAIL 'C'

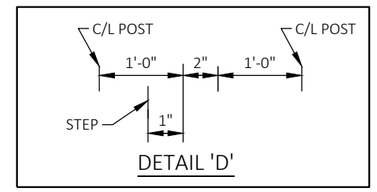

DETAIL 'D'

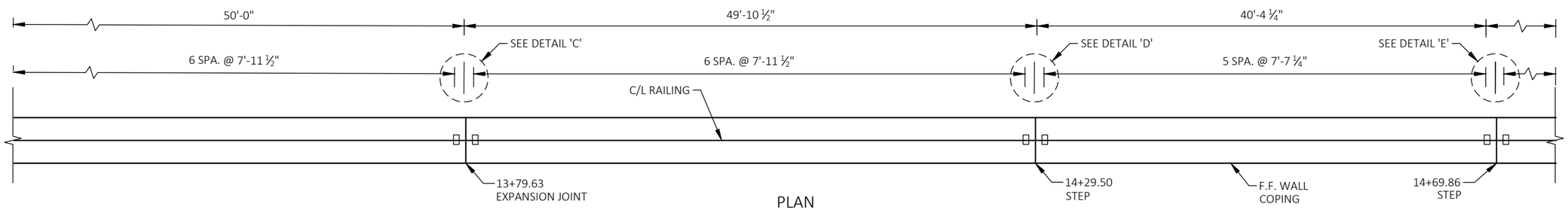

PLAN

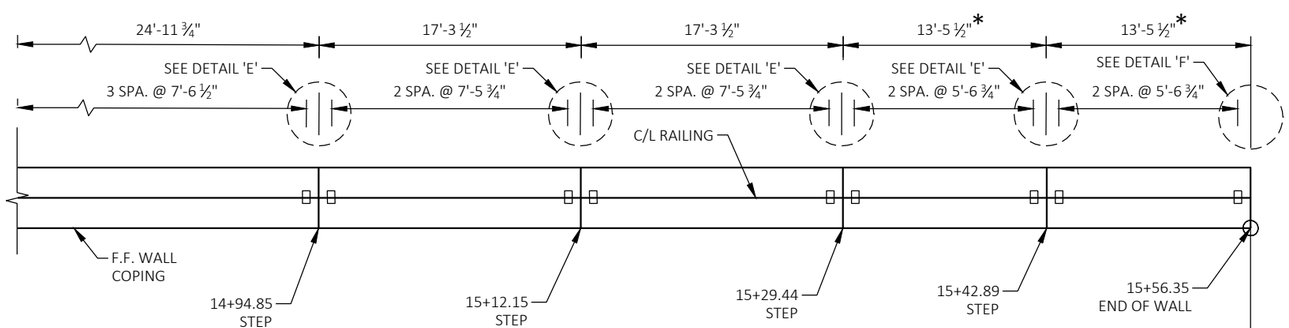

PLAN

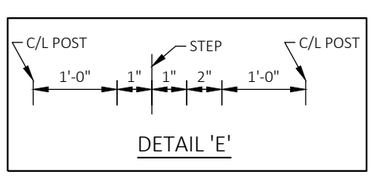

DETAIL 'E'

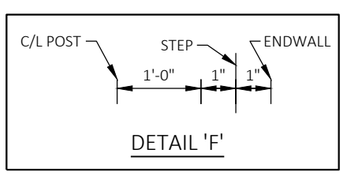

DETAIL 'F'

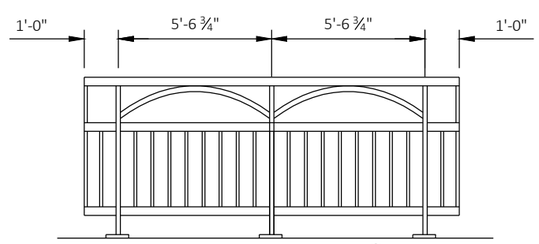

RAILING DETAIL *

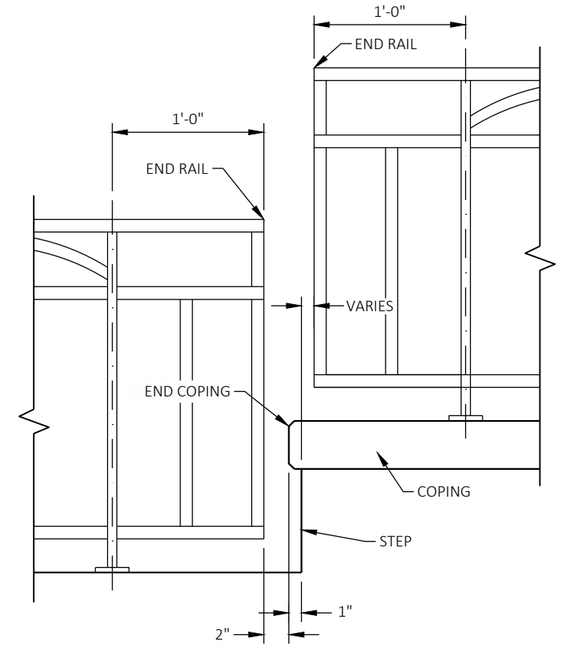

STEP DETAIL

KL Engineering
[A] Better Experience
5400 King James Way
Suite 200
Madison, WI. 53719
Phone: (608) 663-1218
Phone: (800)-810-4012
http://klengineering.com
email@klengineering.com

CITY OF FITCHBURG

RAILING DETAILS
R-13-355

Project No:	19-3488
Date:	OCT 2019
Designed By:	CAH
Drafted By:	STD
Checked By:	CDH

Revisions:

SHEET NO.

6 OF 7

PLOT DATE : 7/26/2019 10:07 AM
PLOT BY : COLE HERNIKL
FILE NAME : G:\FITCHBRG\18013-000\CIVIL3D\SHEETSPLAN\STRUCTURES CAD\080406-RD.DWG

PLOT DATE : 7/26/2019 7:27 AM

PLOT BY : SCOTT DEMEUSE

BORING #	DATE COMPLETED	NORTHING (Y)	EASTING (X)
BORING 1	7/10/2018	463,605.354	812,359.697
BORING 2	7/10/2018	463,652.563	812,391.683
BORING 3	7/10/2018	463,727.699	812,443.045
BORING 4	7/11/2018	463,807.412	812,495.569
BORINGS COMPLETED BY: SOILS & ENGINEERING SERVICES, INC.			
REPORT COMPLETED BY: SOILS & ENGINEERING SERVICES, INC. 7/01/2019			
ALL COORDINATES REFERENCED TO WCCS NAD DANE COUNTY			

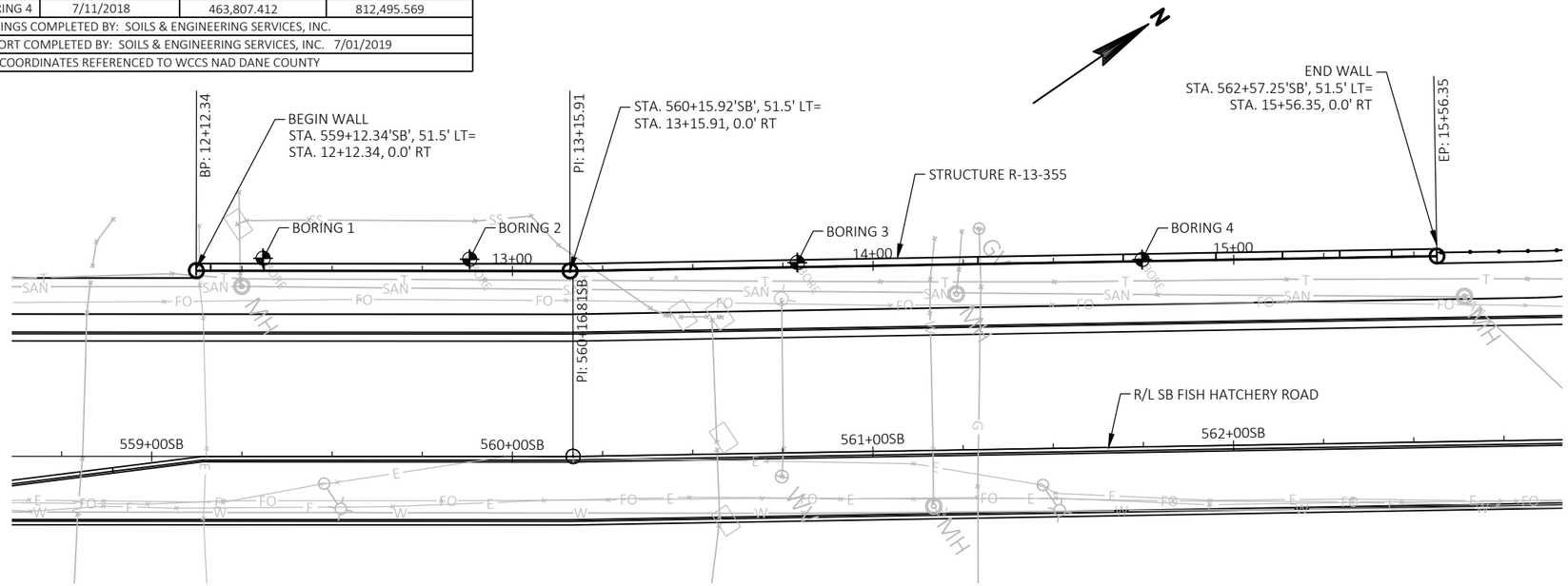

PLAN

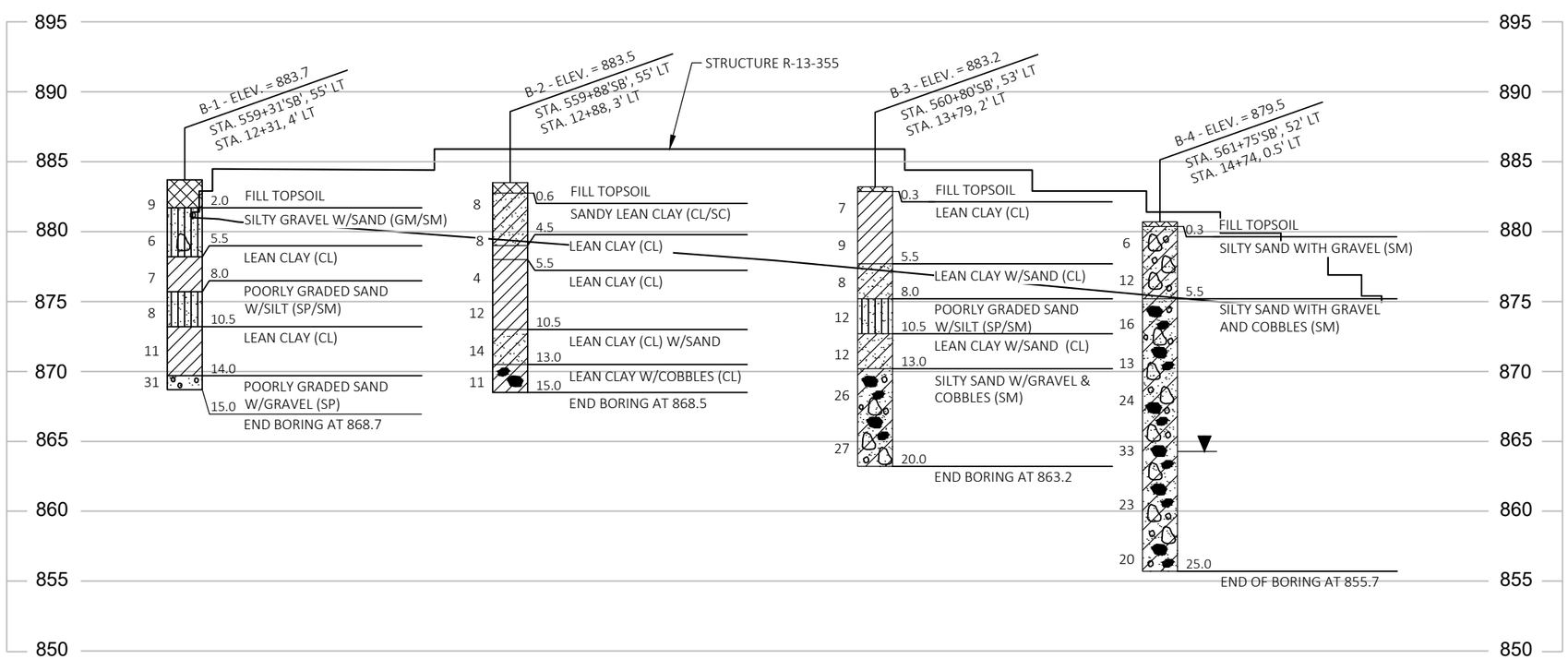

MATERIAL SYMBOLS

ASPHALT, TOPSOIL, PEAT, CONCRETE, FILL, GRAVEL, SAND, CLAY, SILT, BOULDERS OR COBBLES, LIMESTONE, BEDROCK (UNKNOWN), SHALE, SANDSTONE, IGNEOUS/ META

LEGEND OF BORING

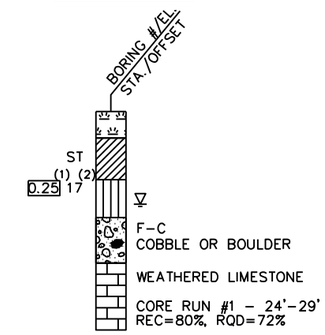

(1) UNCONFINED STRENGTH, AS DETERMINED BY A POCKET PENETROMETER (TSF)

(2) UNLESS OTHERWISE, SPECIFIED THE SPT 'N' VALUE IS BASED ON AASHTO T-206, STANDARD PENETRATION TEST. THE SPT 'N' VALUE PRESENTED HAS NOT BEEN CORRECTED FOR OVERBURDEN PRESSURE OR HAMMER EFFICIENCY.

GROUND WATER ELEVATION

- AT TIME OF DRILLING
- END OF DRILLING
- AFTER DRILLING

ABBREVIATIONS

F-FINE M-MEDIUM C-COARSE ST-SHELBY TUBE

SUBSURFACE EXPLORATION FOR FOUNDATION DESIGN AND BIDDERS INFORMATION

BORINGS WERE COMPLETED AT POINTS APPROXIMATELY AS INDICATED ON THIS DRAWING TO OBTAIN INFORMATION CONCERNING THE CHARACTER OF SUBSURFACE MATERIALS FOUND AT THE SITE. BECAUSE THE INVESTIGATED DEPTHS ARE LIMITED AND THE AREA OF THE BORINGS IS VERY SMALL IN RELATION TO THE ENTIRE SITE, THE WISCONSIN DEPARTMENT OF TRANSPORTATION DOES NOT WARRANT SIMILAR SUBSURFACE CONDITIONS BELOW, BETWEEN, OR BEYOND THESE BORINGS. VARIATIONS IN SOIL CONDITIONS SHOULD BE EXPECTED AND FLUCTUATIONS IN GROUNDWATER LEVELS MAY OCCUR.

KL Engineering
[A] Better Experience
5400 King James Way
Suite 200
Madison, WI. 53719
Phone: (608) 663-1218
Phone: (800)-810-4012
http://klengineering.com
email@klengineering.com

CITY OF FITCHBURG
SUBSURFACE EXPLORATION
R-13-355

Project No:	19-3488
Date:	OCT 2019
Designed By:	CAH
Drafted By:	STD
Checked By:	CDH

Revisions:

SHEET NO.

7 OF 7

FILE NAME : G:\FITCHBRG\18013-000\CIVIL3D\SHEETSPLAN\STRUCTURES CAD\080407-SE.DWG

PLOT DATE : 12/13/2019 11:41 AM
PLOT BY : JENNIFER LAUER
FILE NAME : G:\FITCHBRG\18013-000\CIVIL3D\SHEETSPLAN\STRUCTURES CAD\080101-GP.DWG

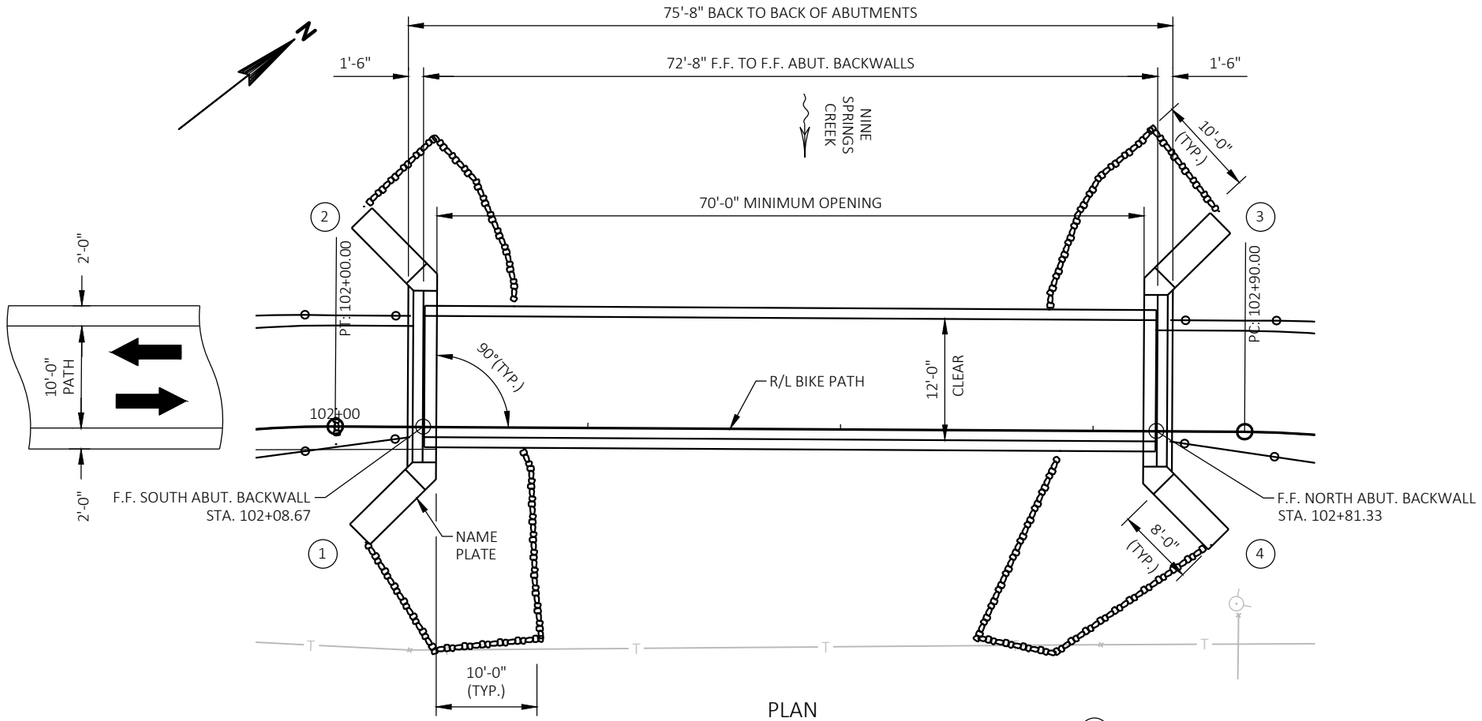

PLAN

(SINGLE SPAN - PREFABRICATED STEEL TRUSS, B-13-872)

(X) INDICATES WING NUMBER

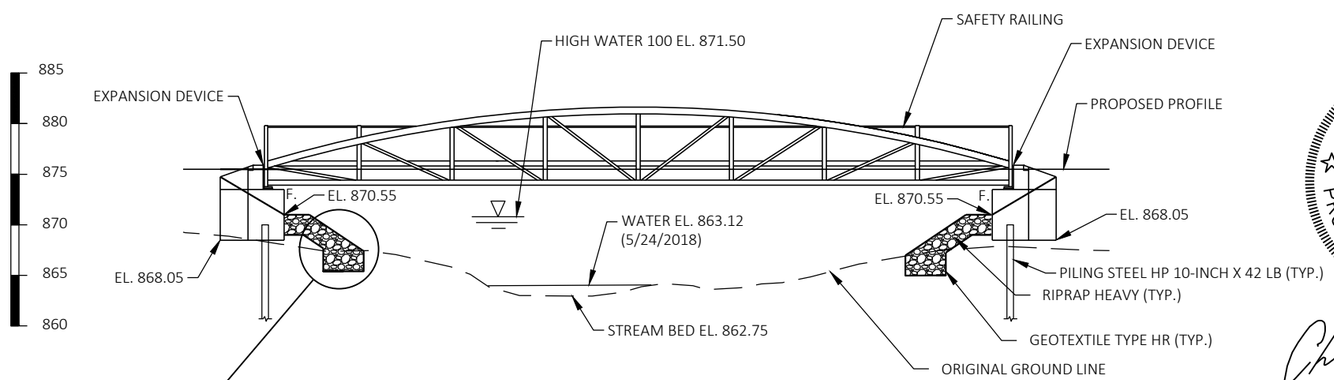

ELEVATION

(NORMAL TO NINE SPRINGS CREEK, B-13-872)

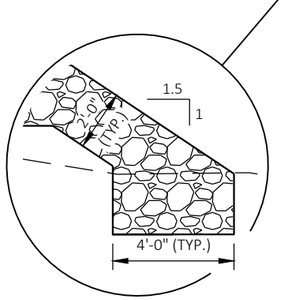

BENCHMARK TABLE

NO.	STATION	OFFSET	DESCRIPTION	ELEV.
56	556+04.33'SB'	65.92' LT	SOUTH CORNER OF CONC. BASE LIGHT POLE	882.01
57	563+59.25'SB'	64.92' LT	SE CORNER OF CONC. PARAPET, B-13-327	872.45
58	569+37.86'SB'	80.55' LT	SW CORNER OF UTILITY BOX CONC. PAD	888.55

DESIGN DATA

LIVE LOAD:

90 PSF PEDESTRIAN LOAD
10,000 LB. VEHICLE LOAD (H-5)
35 PSF WIND LOAD SUPERSTRUCTURE
20 PSF WIND UPLIFT

ULTIMATE DESIGN STRESSES:

CONCRETE MASONRY SLAB.....f'c = 4,000 PSI ALL OTHER.....f'c = 3,500 PSI
HIGH STRENGTH BAR STEEL REINFORCEMENT GRADE 60.....fy = 60,000 PSI
HIGH STRENGTH STRUCTURAL STEEL ASTM A847, A588, A602 OR
ASTM A242.....fy = 50,000 PSI
STRUCTURAL CARBON STEEL ASTM A36.....fy = 36,000 PSI

HYDRAULIC DATA

Q_{100} = 1,275 C.F.S.
VEL. = 3.4 F.P.S.
H.W. = ELEV. 871.50
WATERWAY AREA = 460 SQ. FT.

DRAINAGE AREA = 5.0 MI.
ROAD OVERTOPPING = N/A
SCOUR CRITICAL CODE = 5

Q_2 = 420 C.F.S.
$H.W._{.2}$ = ELEV. 867.18
VEL. = 2.8 F.P.S.

FOUNDATION DATA

ABUTMENTS TO BE SUPPORTED ON: PILING STEEL HP 10-INCH X 42 LB.

DRIVEN TO A REQUIRED DRIVING RESISTANCE OF 110 TONS** PER PILE AS DETERMINED BY THE MODIFIED GATES DYNAMIC FORMULA. ESTIMATED 20-FT LONG AT SOUTH ABUTMENT AND 25-FT LONG AT NORTH ABUTMENT.

** THE FACTORED AXIAL RESISTANCE OF PILES IN COMPRESSION USED FOR DESIGN IS THE REQUIRED DRIVING RESISTANCE MULTIPLIED BY A RESISTANCE FACTOR OF 0.50 USING MODIFIED GATES TO DETERMINE DRIVEN PILE CAPACITY.

WISCONSIN
CHAD D. HALVERSON
E-34364
MADISON, WI
PROFESSIONAL ENGINEER

December 13, 2019

STRUCTURE DESIGN CONTACT
CHAD HALVERSON (608) 663-1218

LIST OF DRAWINGS

1. GENERAL PLAN
2. CROSS SECTIONS & QUANTITIES
3. SUBSURFACE EXPLORATION
4. SOUTH ABUTMENT
5. NORTH ABUTMENT
6. ABUTMENT DETAILS
7. EXPANSION DEVICE
8. RAILING DETAILS

KL Engineering
[A] Better Experience
5400 King James Way
Suite 200
Madison, WI. 53719
Phone: (608) 663-1218
Phone: (800)-810-4012
http://klengineering.com
email@klengineering.com

CITY OF FITCHBURG

GENERAL PLAN
B-13-872

NO.	DATE	REVISION	BY

KL Engineering [A] Better Experience

STRUCTURE B-13-872

PEDESTRIAN BRIDGE OVER NINE SPRINGS CREEK

COUNTY DANE | ~~TOWN~~/CITY/~~VILLAGE~~ FITCHBURG

DESIGN SPEC. AASHTO LRFD BRIDGE DESIGN SPECIFICATIONS

DESIGNED BY CDH	DESIGN CK'D. CAH	DRAWN BY STD	PLANS CK'D. CDH

GENERAL PLAN

SHEET 1 OF 8

Project No: 18013
Date: 7-29-2019
Designed By: CDH
Drafted By: STD
Checked By: CAH

Revisions:

SHEET NO.

1 OF 8

PLOT DATE : 10/17/2019 3:18 PM
PLOT BY : COLE HERNIKL
FILE NAME : G:\FITCHBRG\18013-000\CIVIL3D\SHEETSPLAN\STRUCTURES CAD\080102-GN.DWG

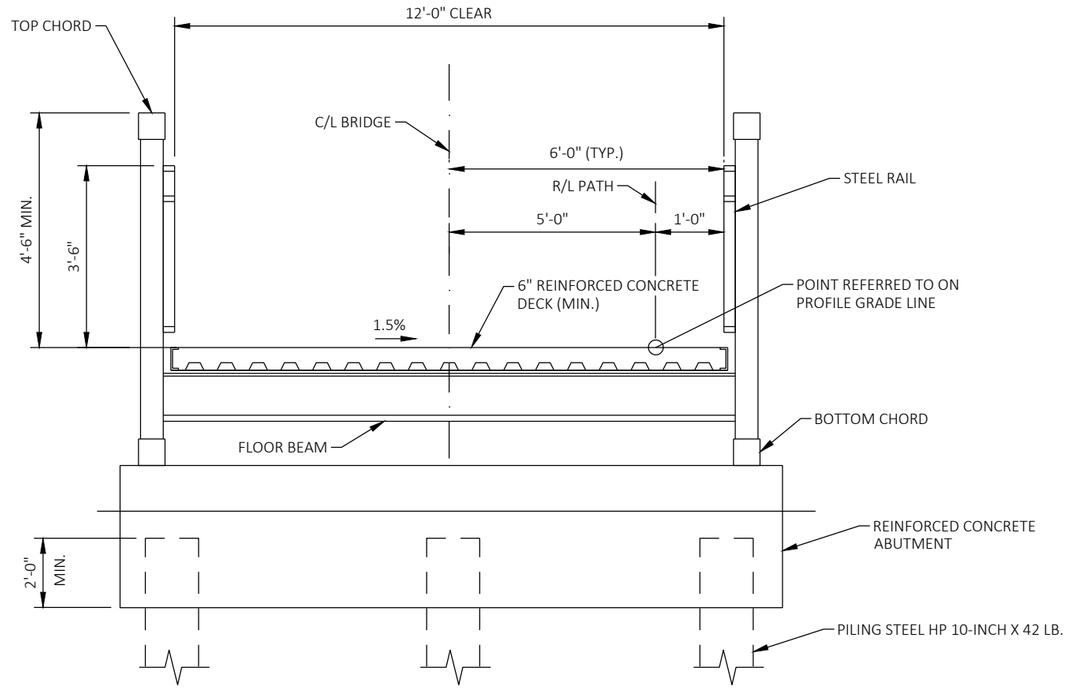

CROSS SECTION THRU BRIDGE

(LOOKING NORTH)

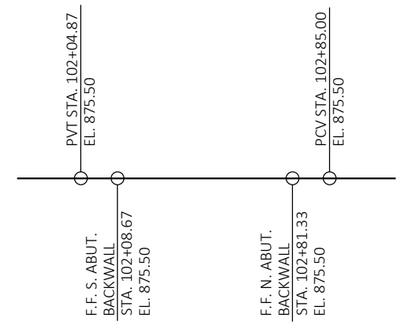

PROFILE GRADE BIKE PATH

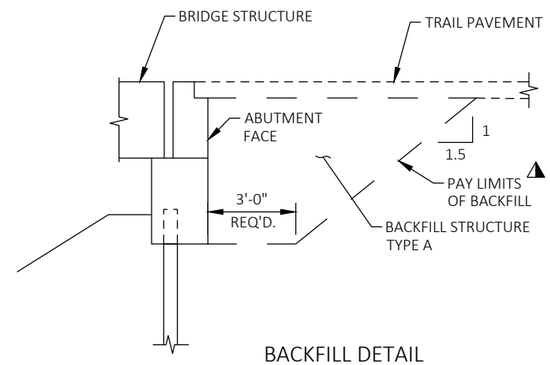

BACKFILL PAY LIMITS. BACKFILL BEYOND BACKFILL PAY LIMITS SHALL BE INCIDENTAL TO EXCAVATION FOR STRUCTURES. LIMITS OF EXCAVATION SHALL BE DETERMINED BY THE CONTRACTOR.

BACKFILL DETAIL

TOTAL ESTIMATED QUANTITIES

ITEM NUMBER	ITEM DESCRIPTION	UNIT	S. ABUT	N. ABUT	SUPER.	TOTAL
902.02.02	EXCAVATION FOR STRUCTURES BRIDGES B-13-872	LS	---	---	---	1
902.07	BACKFILL STRUCTURE TYPE A	TON	51	51	---	102
902.03	CONCRETE MASONRY BRIDGES	CY	26	26	---	51
902.08	EXPANSION DEVICE B-13-872	LF	12	12	---	24
902.09	PROTECTIVE SURFACE TREATMENT	SY	---	---	101	101
902.10	BAR STEEL REINFORCEMENT HS COATED STRUCTURES	LB	2,640	2,640	---	5,280
902.11	PREFABRICATED STEEL TRUSS PEDESTRIAN BRIDGE B-13-872 LRFD	LS	---	---	1	1
902.06	RUBBERIZED MEMBRANE WATERPROOFING	SY	6	6	---	12
902.12	PILING STEEL HP 10-INCH X 42 LB	LF	60	75	---	135
902.14	PAINTING EPOXY SYSTEM STEEL TRUSS B-13-872	LS	---	---	1	1
317.20	RIPRAP HEAVY	CY	60	54	---	114
648.20	PIPE UNDERDRAIN WRAPPED 6-INCH	LF	54	54	---	108
318.20	GEOTEXTILE TYPE DF SCHEDULE A	SY	30	30	---	60
318.10	GEOTEXTILE TYPE HR	SY	114	106	---	220
	NON-BID ITEMS					
	BRIDGE SEAT PROTECTION					

ESTIMATED STEEL TRUSS BRIDGE REACTIONS

REACTIONS @ EACH BASE PLATE (4 TOTAL)			
	"P (LBS)"	"H (LBS)"	"L (LBS)"
DEAD	19,000		
LIVE	20,200		
VEHICLE	6,300		
WIND		8,600	5,700
WINDWARD	-10,000		
LEEWARD	2,600		
STREAM			
THERMAL			3,800

BRIDGE LENGTH = 72'-5"
BRIDGE CLEAR WIDTH = 12'-0"
DECK TYPE = CONCRETE DECK
RAIL HEIGHT = 54" RAIL HEIGHT
LOADINGS = 90#, H5

P = VERTICAL LOAD AT EACH BASE PLATE (4 PER BRIDGE)
H = HORIZONTAL LOAD AT EACH SPAN END (2 PER BRIDGE)
L = LONGITUDINAL LOAD AT FIXED BEARING (4 PER BRIDGE)

NOTES:

1. VALUES IN THIS TABLE ARE ESTIMATES. ACTUAL VALUES SHALL BE PROVIDED BY PREFABRICATED BRIDGE MANUFACTURER.
2. "+" INDICATES DOWNWARD LOAD
   "-" INDICATES UPWARD LOAD

GENERAL NOTES

DRAWINGS SHALL NOT BE SCALED.

BAR STEEL REINFORCEMENT SHALL HAVE 2" CLEAR COVER UNLESS NOTED OTHERWISE.

AT THE BACKFACE OF ABUTMENT ALL VOLUME WHICH CANNOT BE IN PLACE BEFORE ABUTMENT CONSTRUCTION AND NOT OCCUPIED BY THE NEW STRUCTURE SHALL BE BACKFILLED WITH STRUCTURE BACKFILL.

THE STRUCTURE DESIGN SHALL BE IN ACCORDANCE WITH THE LATEST EDITION OF THE "STANDARD SPECIFICATION FOR HIGHWAY BRIDGES" AND "GUIDE SPECIFICATIONS FOR THE DESIGN OF PEDESTRIAN BRIDGES" BY THE AMERICAN ASSOCIATION OF STATE HIGHWAY AND TRANSPORTATION OFFICIALS (AASHTO).

THE SUPERSTRUCTURE SHALL BE ANCHORED TO THE FOUNDATIONS IN A MANOR TO:
- ALLOW THERMAL MOVEMENTS OF THE SUPERSTRUCTURE.
- PREVENT HORIZONTAL TRANSLATION OF THE SUPERSTRUCTURE PERPENDICULAR TO THE C/L OF THE PATH.

BEARINGS & BEARING ANCHOR BOLTS ARE INCLUDED IN THE BID ITEM "PREFABRICATED STEEL TRUSS PEDESTRIAN BRIDGE, STRUCTURE B-13-872".

THE PAINT COLOR FOR THE STEEL TRUSS AND RAILINGS SHALL BE PANATONE MATCHING SYSTEM COLOR PMS364 (GREEN).

PROTECTIVE SURFACE TREATMENT SHALL BE APPLIED TO THE TOP SURFACE OF THE DECK AND PAVING BLOCK.

APPLY BRIDGE SCAT PROTECTION TO BEAM SEATS PRIOR TO SETTING BEARINGS.

KL Engineering
[A] Better Experience
5400 King James Way
Suite 200
Madison, WI. 53719
Phone: (608) 663-1218
Phone: (800)-810-4012
http://klengineering.com
email@klengineering.com

CITY OF FITCHBURG

CROSS SECTION & QUANTITIES B-13-872

Project No: 19-3488
Date: OCT 2019
Designed By: CDH
Drafted By: STD
Checked By: CAH

Revisions:

SHEET NO.

2 OF 8

PLOT DATE : 7/22/2019 1:12 PM

PLOT BY : SCOTT DEMEUSE

FILE NAME : G:\FITCHBRG\18013-000\CIVIL3D\SHEETSPLAN\STRUCTURES CAD\080103-SE.DWG

BORING #	DATE COMPLETED	EASTING (Y)	NORTHING (X)
BORING PB-1	6/21/2019	464,063.182	812,645.796
BORING PB-2	6/21/2019	464,003.963	812,605.911
BORINGS COMPLETED BY: SOILS & ENGINEERING SERVICES, INC.			
REPORT COMPLETED BY: SOILS & ENGINEERING SERVICES, INC.			
ALL COORDINATES REFERENCED TO WCCS NAD DANE COUNTY			

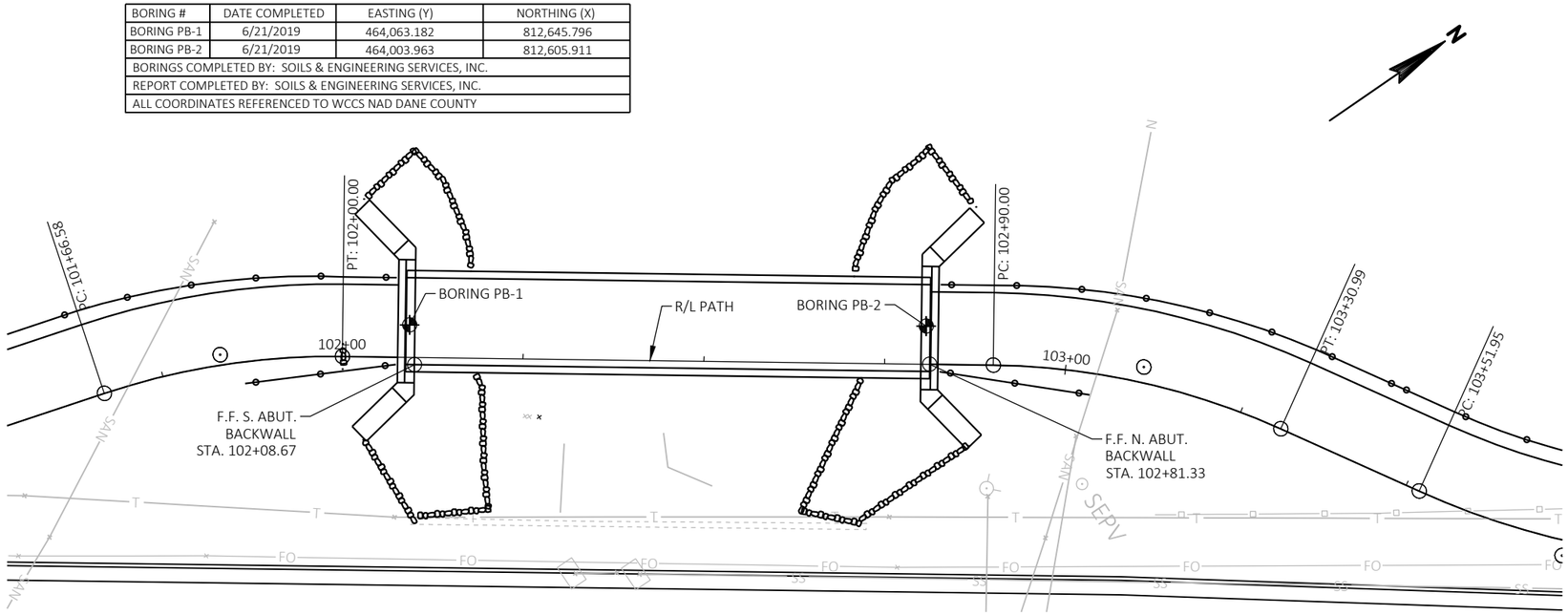

PLAN

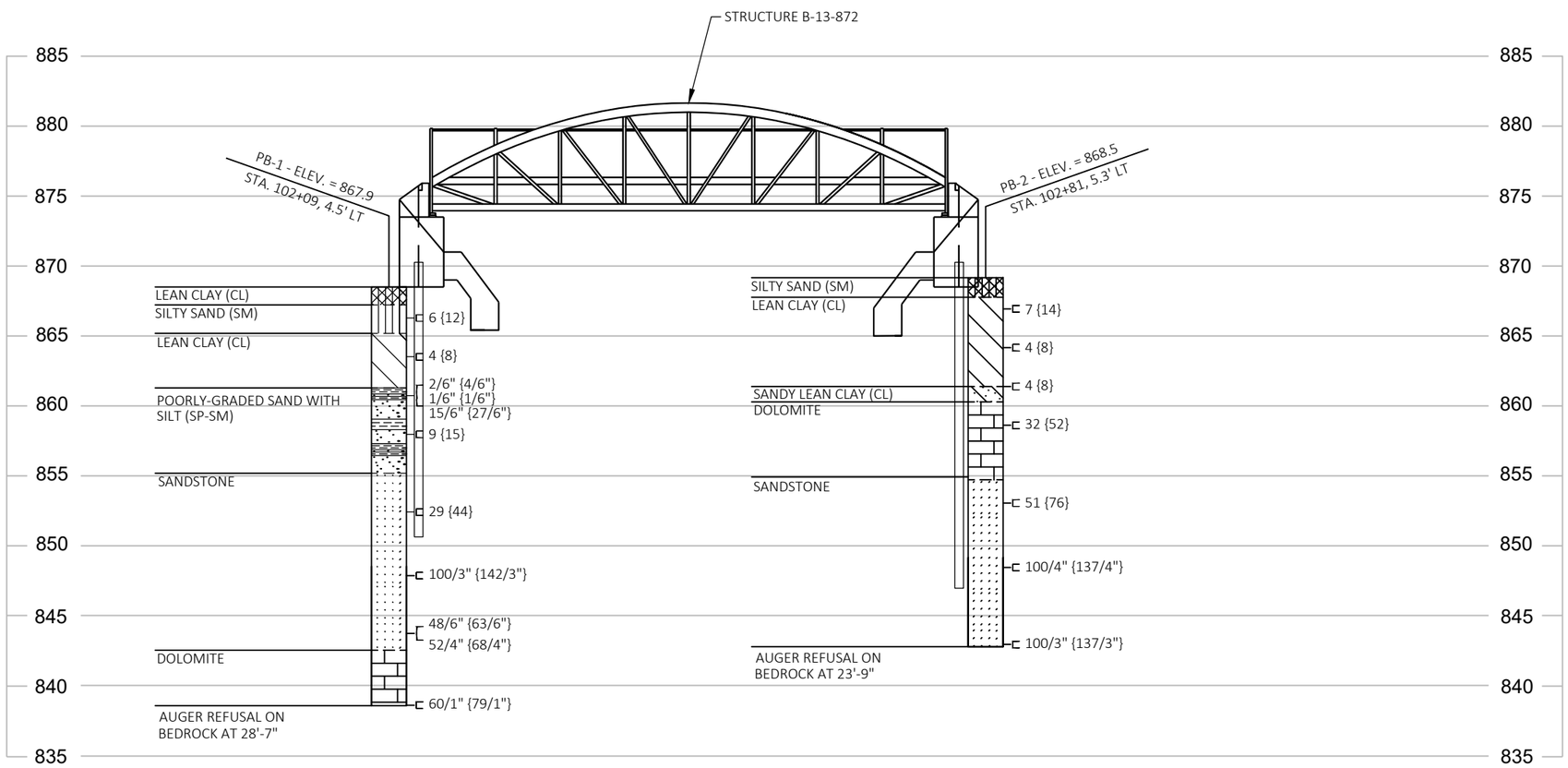

MATERIAL SYMBOLS

ASPHALT, TOPSOIL, PEAT, CONCRETE, FILL, GRAVEL, SAND, CLAY, SILT, BOULDERS OR COBBLES, LIMESTONE, BEDROCK (UNKNOWN), SHALE, SANDSTONE, IGNEOUS/META

LEGEND OF BORING

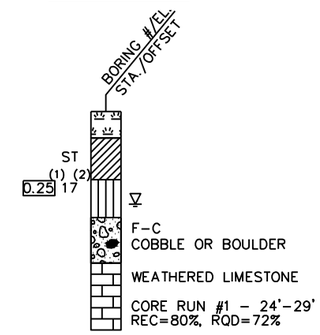

(1) UNCONFINED STRENGTH, AS DETERMINED BY A POCKET PENETROMETER (TSF)

(2) UNLESS OTHERWISE, SPECIFIED THE SPT 'N' VALUE IS BASED ON AASHTO T-206, STANDARD PENETRATION TEST. THE SPT 'N' VALUE PRESENTED HAS NOT BEEN CORRECTED FOR OVERBURDEN PRESSURE OR HAMMER EFFICIENCY.

GROUND WATER ELEVATION

- AT TIME OF DRILLING
- END OF DRILLING
- AFTER DRILLING

ABBREVIATIONS

F-FINE M-MEDIUM C-COARSE ST-SHELBY TUBE

SUBSURFACE EXPLORATION FOR FOUNDATION DESIGN AND BIDDERS INFORMATION

BORINGS WERE COMPLETED AT POINTS APPROXIMATELY AS INDICATED ON THIS DRAWING TO OBTAIN INFORMATION CONCERNING THE CHARACTER OF SUBSURFACE MATERIALS FOUND AT THE SITE. BECAUSE THE INVESTIGATED DEPTHS ARE LIMITED AND THE AREA OF THE BORINGS IS VERY SMALL IN RELATION TO THE ENTIRE SITE, THE WISCONSIN DEPARTMENT OF TRANSPORTATION DOES NOT WARRANT SIMILAR SUBSURFACE CONDITIONS BELOW, BETWEEN, OR BEYOND THESE BORINGS. VARIATIONS IN SOIL CONDITIONS SHOULD BE EXPECTED AND FLUCTUATIONS IN GROUNDWATER LEVELS MAY OCCUR.

KL Engineering
[A] Better Experience
5400 King James Way
Suite 200
Madison, WI. 53719
Phone: (608) 663-1218
Phone: (800)-810-4012
http://klengineering.com
email@klengineering.com

CITY OF FITCHBURG
SUBSURFACE EXPLORATION
B-13-872

Project No:	19-3488
Date:	OCT 2019
Designed By:	CDH
Drafted By:	STD
Checked By:	CAH

Revisions:

SHEET NO.

3 OF 8

PLOT DATE : 7/23/2019 1:30 PM
PLOT BY : SCOTT DEMEUSE
FILE NAME : G:\FITCHBRG\18013-000\CIVIL3D\SHEETSPLAN\STRUCTURES CAD\080104-S. ABUT.DWG

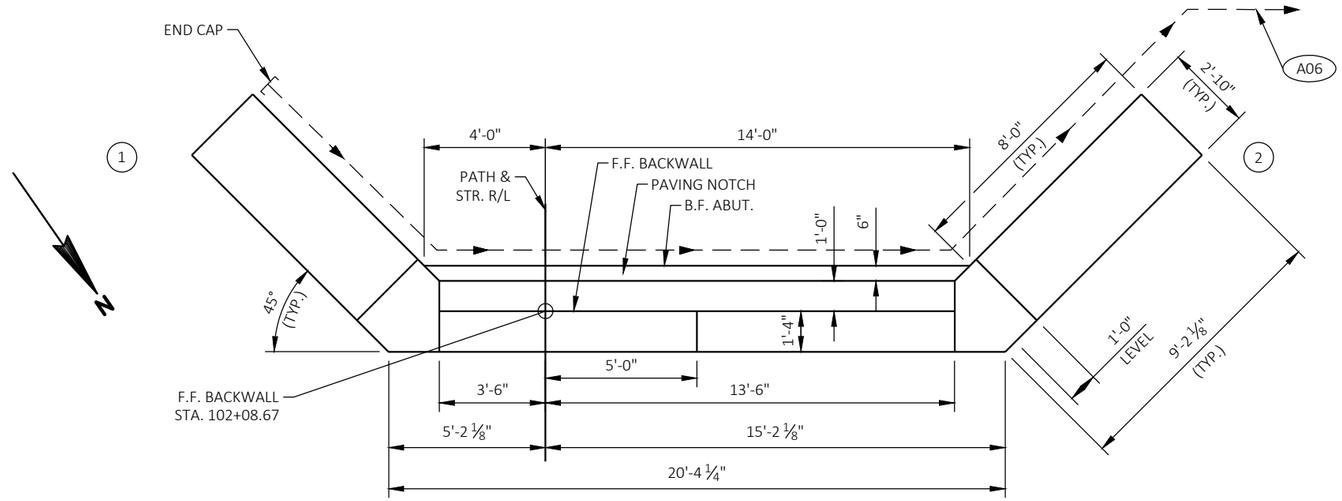

PLAN

LEGEND

- A01 CONSTRUCTION JOINT. KEYWAY FORMED BY BEVELED 2"X6".
- A02 CONSTRUCTION JOINT. POUR CONCRETE ABOVE THIS JOINT AFTER SUPERSTRUCTURE IS IN PLACE. STRIKE OFF AND LEAVE ROUGH.
- A03 OPTIONAL CONSTRUCTION JOINT. KEYWAY FORMED BY BEVELED 2"X6". ¾" "V" GROOVE AT F.F. IF JOINT IS USED.
- A04 VERTICAL CONSTRICTION JOINT.
- A05 18" (RMW) RUBBERIZED MEMBRANE WATERPROOFING. SEAL ALL HORIZONTAL AND VERTICAL JOINTS AT BACK FACE.
- A06 PIPE UNDERDRAIN WRAPPED 6-INCH. CAP END AND SLOPE 0.5% MIN. TO SUITABLE DRAINAGE. RODENT SHIELD REQUIRED.
- A07 S. ABUTMENT TO BE SUPPORTED ON PILING STEEL HP 10-INCH X 42 LB. DRIVEN TO A REQUIRED DRIVING RESISTANCE OF 110 TONS PER PILE AS DETERMINED BY THE MODIFIED GATES DYNAMIC FORMULA. EST. 20' LONG AT S. ABUT.

NOTES

SEE SHEET 6 FOR SECTIONS A1, A2 & A3.

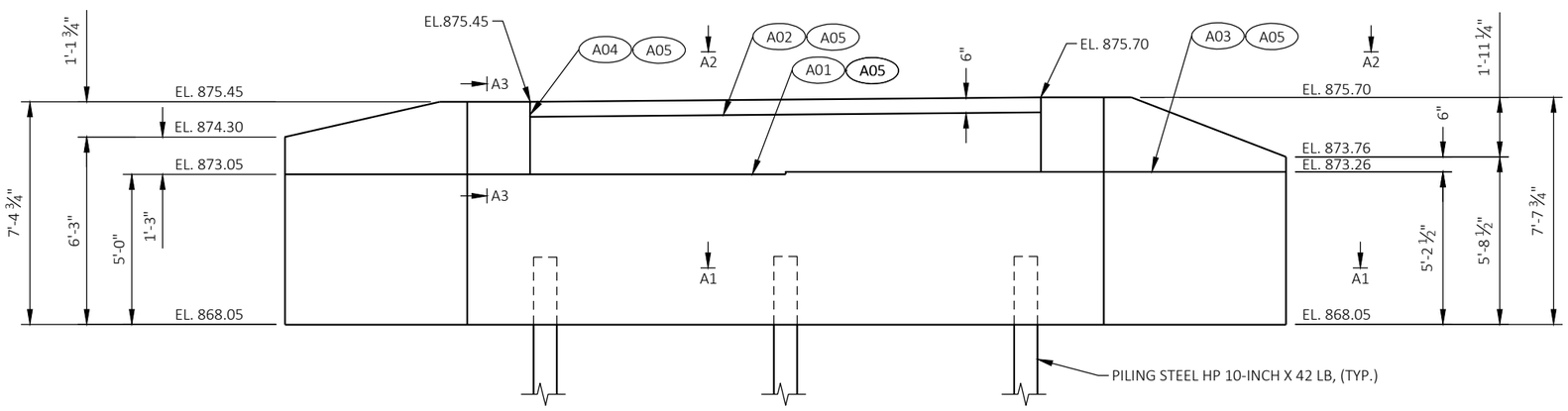

ELEVATION
(S. ABUT. LOOKING SOUTH)

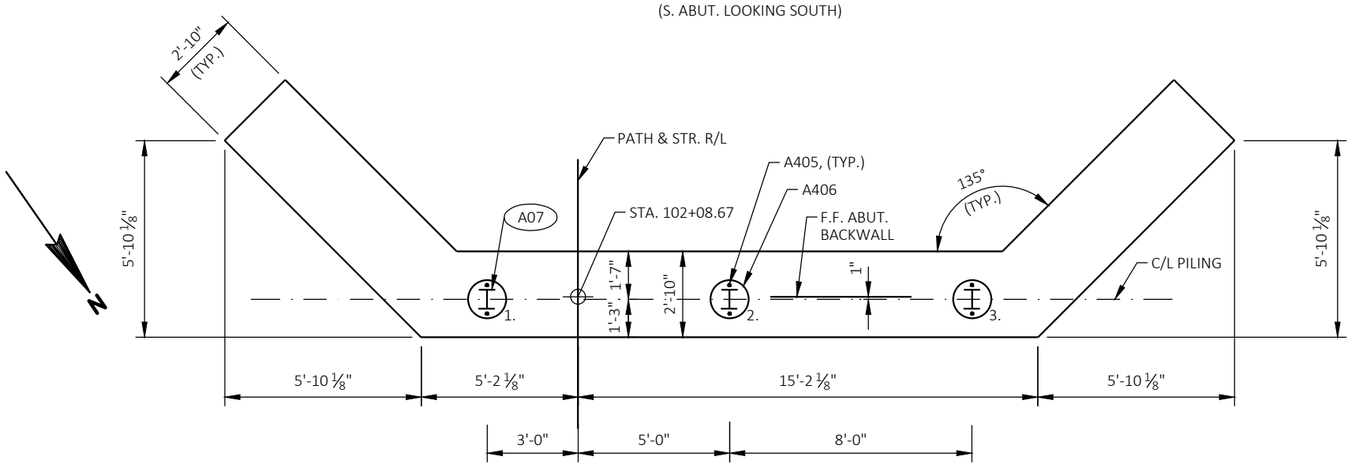

PILE PLAN

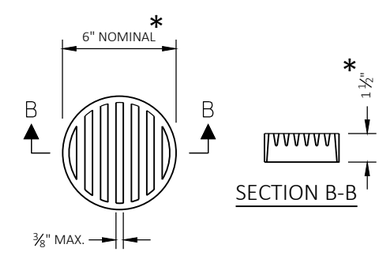

SECTION B-B

RODENT SHIELD DETAIL

* DIMENSIONS ARE APPROXIMATE. THE GRATE IS SIZED TO FIT INTO A PIPE COUPLING. ORIENT SO SLOTS ARE VERTICAL. THE RODENT SHIELD, PIPE COUPLING AND SCREWS SHALL BE CONSIDERED INCIDENTAL TO THE BID ITEM "STRUCTURE - STEWART'S WOODS ROAD, B-13-869". THE RODENT SHIELD SHALL BE A PVC GRATE SIMILAR TO THIS DETAIL. THE GRATE IS COMMERCIALLY AVAILABLE AS A FLOOR STRAINER. A PIPE COUPLING IS REQUIRED FOR THE ATTACHMENT OF THIS SHIELD TO THE EXPOSED END OF THE PIPE UNDERDRAIN. THE SHIELD SHALL BE FASTENED TO THE PIPE COUPLING WITH TWO OR MORE NO. 10 X 1-INCH STAINLESS STEEL SHEET METAL SCREWS.

KL Engineering
[A] Better Experience
5400 King James Way
Suite 200
Madison, WI. 53719
Phone: (608) 663-1218
Phone: (800)-810-4012
http://klengineering.com
email@klengineering.com

CITY OF FITCHBURG

SOUTH ABUTMENT
B-13-872

Project No:	19-3488
Date:	OCT 2019
Designed By:	CDH
Drafted By:	STD
Checked By:	CAH

Revisions:

SHEET NO.

4 OF 8

PLOT DATE : 7/23/2019 1:30 PM
PLOT BY : SCOTT DEMEUSE
FILE NAME : G:\FITCHBRG\18013-000\CIVIL3D\SHEETSPLAN\STRUCTURES CAD\080105-N. ABUT.DWG

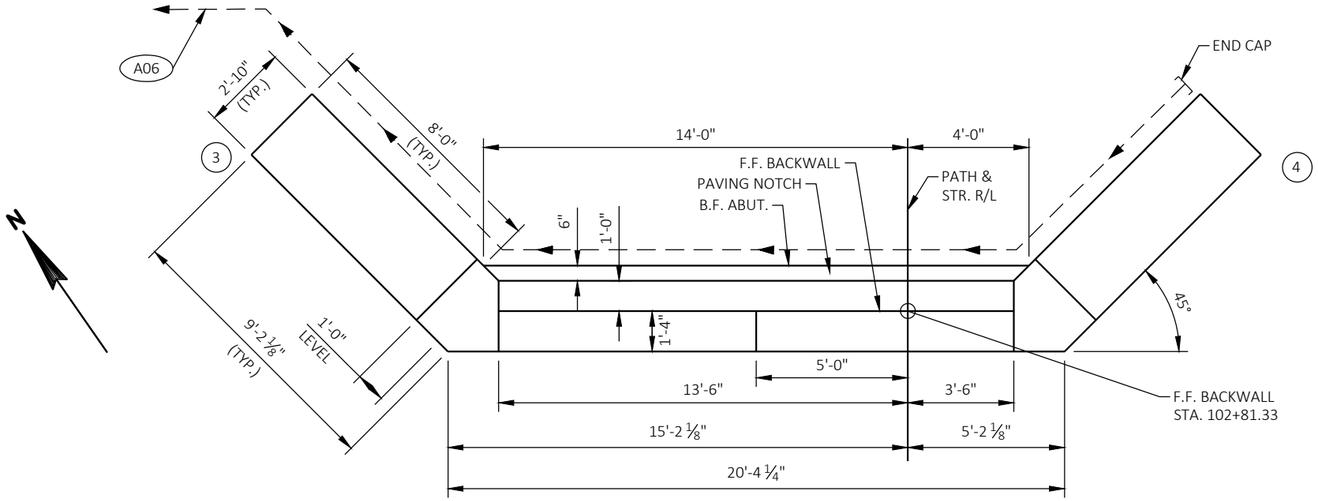

PLAN

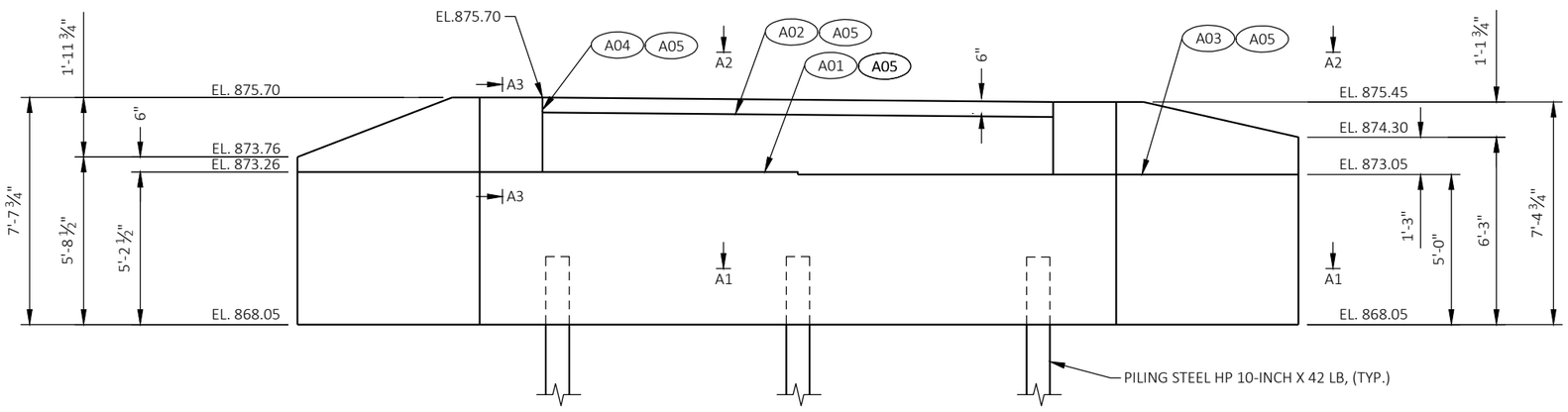

ELEVATION
(N. ABUT. LOOKING NORTH)

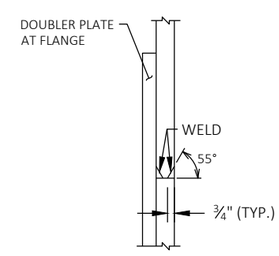

HP WELD DETAIL
FLANGE SHOWN, WEB SIMILAR

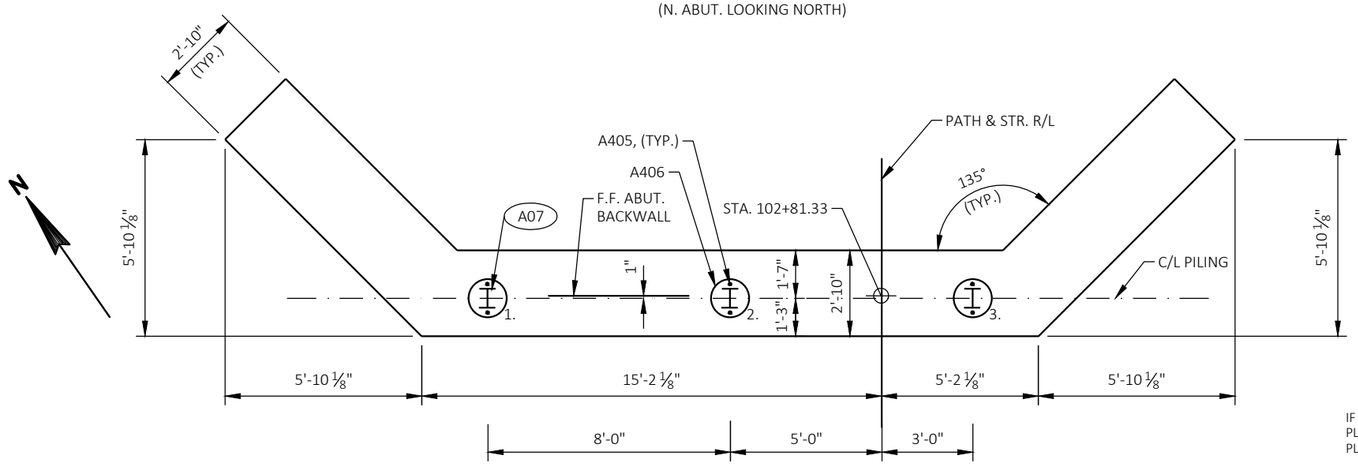

PILE PLAN

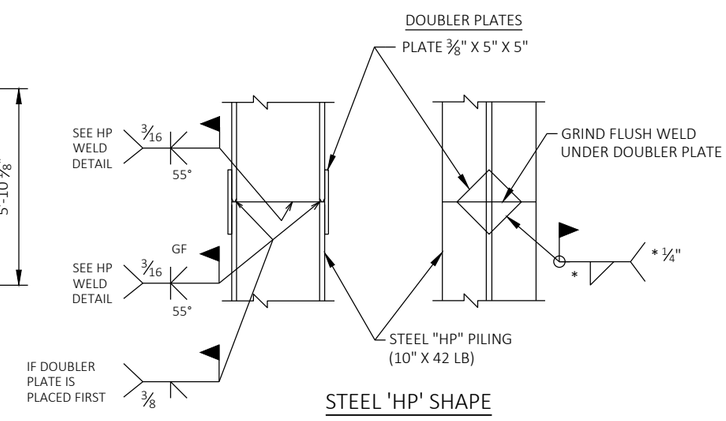

STEEL 'HP' SHAPE

LEGEND

- A01 CONSTRUCTION JOINT. KEYWAY FORMED BY BEVELED 2"X6".
- A02 CONSTRUCTION JOINT. POUR CONCRETE ABOVE THIS JOINT AFTER SUPERSTRUCTURE IS IN PLACE. STRIKE OFF AND LEAVE ROUGH.
- A03 OPTIONAL CONSTRUCTION JOINT. KEYWAY FORMED BY BEVELED 2"X6". 3/4" "V" GROOVE AT F.F. IF JOINT IS USED.
- A04 VERTICAL CONSTRICTION JOINT.
- A05 18" (RMW) RUBBERIZED MEMBRANE WATERPROOFING. SEAL ALL HORIZONTAL AND VERTICAL JOINTS AT BACK FACE.
- A06 PIPE UNDERDRAIN WRAPPED 6-INCH. CAP END AND SLOPE 0.5% MIN. TO SUITABLE DRAINAGE. RODENT SHIELD REQUIRED.
- A07 N. ABUTMENT TO BE SUPPORTED ON PILING STEEL HP 10-INCH X 42 LB. DRIVEN TO A REQUIRED DRIVING RESISTANCE OF 110 TONS PER PILE AS DETERMINED BY THE MODIFIED GATES DYNAMIC FORMULA. EST. 25' LONG AT N. ABUT.

NOTES

SEE SHEET 6 FOR SECTIONS A1, A2 & A3.

KL Engineering
[A] Better Experience
5400 King James Way
Suite 200
Madison, WI. 53719
Phone: (608) 663-1218
Phone: (800)-810-4012
http://klengineering.com
email@klengineering.com

CITY OF FITCHBURG

NORTH ABUTMENT
B-13-872

Project No:	19-3488
Date:	OCT 2019
Designed By:	CDH
Drafted By:	STD
Checked By:	CAH

Revisions:

SHEET NO.
5 OF 8

PLOT DATE : 7/22/2019 12:35 PM
PLOT BY : SCOTT DEMEUSE
FILE NAME : G:\FITCHBRG\18013-000\CIVIL3D\SHEETSPLAN\STRUCTURES CAD\080106-ABUT-DET.DWG

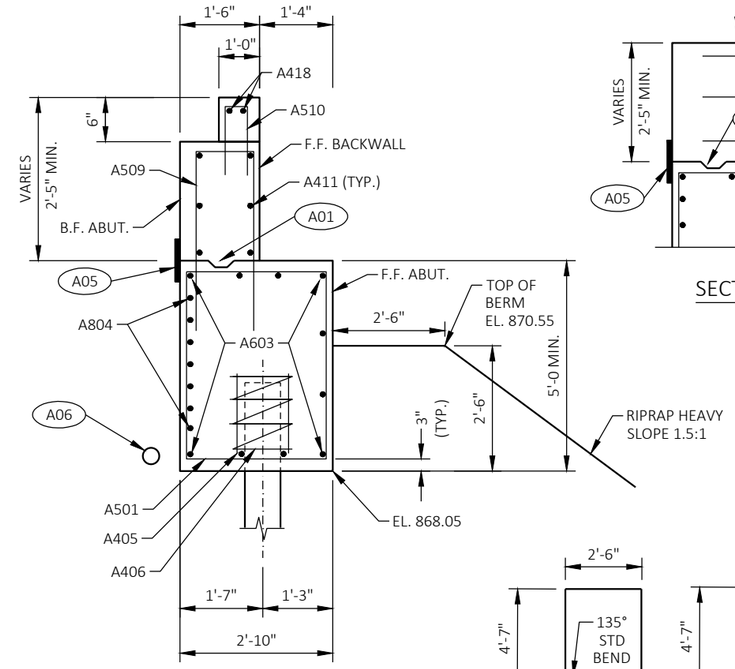

TYPICAL SECTION THRU BODY

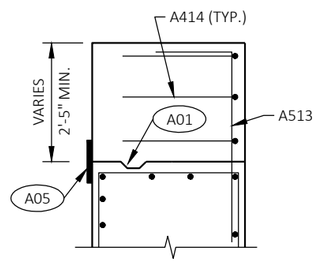

SECTION A3

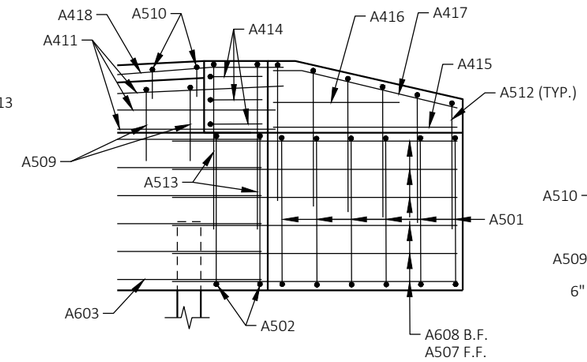

TYPICAL WING ELEVATION

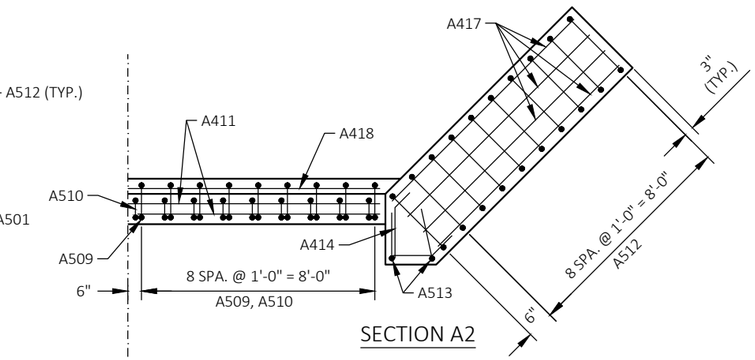

SECTION A2

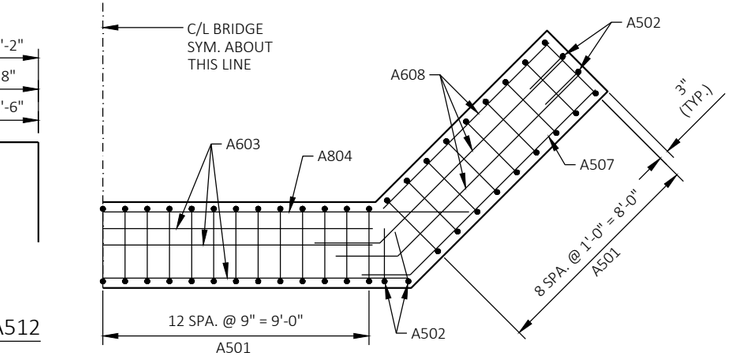

SECTION A1

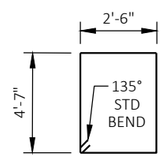

A501

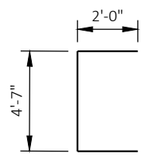

A502

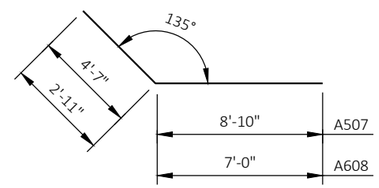

A507, A608

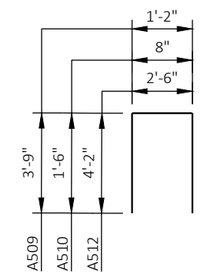

A509, A510, A512

LEGEND

- (A01) CONSTRUCTION JOINT. KEYWAY FORMED BY BEVELED 2"X6".
- (A02) CONSTRUCTION JOINT. POUR CONCRETE ABOVE THIS JOINT AFTER SUPERSTRUCTURE IS IN PLACE. STRIKE OFF AND LEAVE ROUGH.
- (A05) 18" (RMW) RUBBERIZED MEMBRANE WATERPROOFING. SEAL ALL HORIZONTAL AND VERTICAL JOINTS AT BACK FACE.
- (A06) PIPE UNDERDRAIN WRAPPED 6-INCH. CAP END AND SLOPE 0.5% MIN. TO SUITABLE DRAINAGE. RODENT SHIELD REQUIRED.

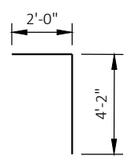

A513

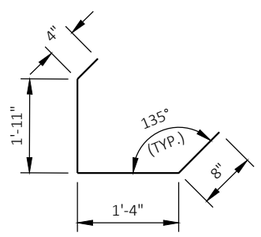

A414

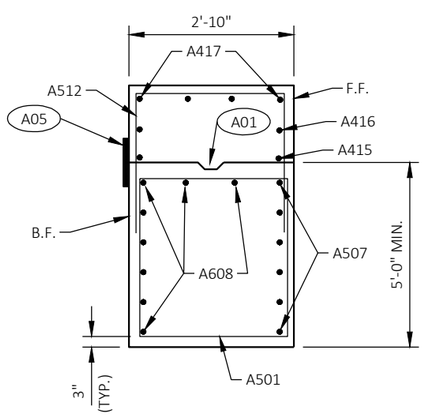

TYPICAL SECTION THRU WING

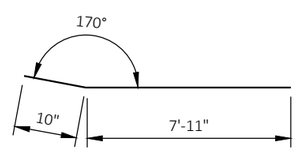

A417

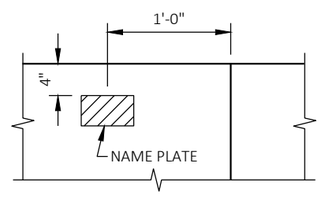

NAME PLATE LOCATION
WING 1

BILL OF BARS

TOTAL COATED = 2,640 LBS EACH ABUT. (5,280 LBS TOTAL)

BAR MARK	NO. REQ'D.		LENGTH	COAT	BENT	LOCATION
	S. ABUT.	N. ABUT.				
A501	43	43	14'-10"	X	X	BODY - STIRRUPS
A502	8	8	8'-4"	X	X	CORNER STIRRUPS
A603	10	10	18'-0"	X		ABUT BODY - HORIZ. - TOP, F.F. & BTM
A804	7	7	25'-6"	X		ABUT BODY - HORIZ. - B.F.
A405	6	6	2'-3"	X		PILE - 2 PER PILE - VERT
A406	3	3	28'-0"	X		PILE - 1 PER PILE - HORIZ
A507	12	12	13'-4"	X	X	WINGS - HORIZ - F.F.
A608	16	16	10'-10"	X	X	WINGS - HORIZ - B.F. & TOP
A509	18	18	8'-5"	X	X	BACKWALL - VERT
A510	18	18	3'-5"	X	X	PAVING BLOCK - VERT
A411	6	6	17'-8"	X		BACKWALL - HORIZ
A512	20	20	10'-7"	X	X	UPPER WING - VERT
A513	4	4	6'-0"	X	X	UPPER WING CORNERS - VERT
A414	6	6	4'-1"	X	X	UPPER WING CORNERS - HORIZ
A415	4	4	8'-10"	X		UPPER WING - HORIZ - F.F. & B.F.
A416	4	4	4'-8"	X		UPPER WING - HORIZ - F.F. & B.F.
A417	8	8	8'-9"	X	X	UPPER WING - HORIZ - TOP
A418	2	2	16'-8"	X		PAVING BLOCK - HORIZ.

KL Engineering
[A] Better Experience
5400 King James Way
Suite 200
Madison, WI. 53719
Phone: (608) 663-1218
Phone: (800)-810-4012
http://klengineering.com
email@klengineering.com

CITY OF FITCHBURG
ABUTMENT DETAILS
B-13-872

Project No: 19-3488
Date: OCT 2019
Designed By: CDH
Drafted By: STD
Checked By: CAH

Revisions:

SHEET NO.
6 OF 8

PLOT DATE : 5/8/2019 9:13 AM

PLOT BY : SCOTT DEMEUSE

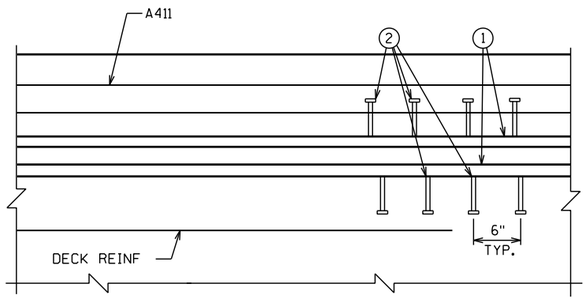

PART PLAN

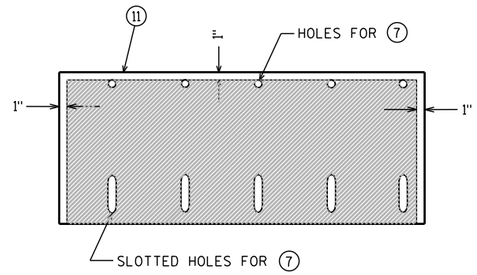

PLAN OF SIDEWALK COVER PLATE WITH SLIP-RESISTANT SURFACE

PLACE SLIP-RESISTANT SURFACE ON TOP WALKING SURFACE IN SHADED AREA ONLY.

APPROVED SLIP-RESISTANT APPLIED SURFACES FOR STEEL PLATES		
PRODUCT	MANUFACTURER	CONTACT AT
SLIPNOT GRADE 2, STEEL	W. S. MOLNAR COMPANY	1-800-SLIPNOT
ALGRIP, STEEL	ROSS TECHNOLOGY CORP.	1-800-345-8170

LEGEND

1. NEOPRENE STRIP SEAL (4 - INCH) AND STEEL EXTRUSIONS.
2. STUDS 5/8"Φ X 6 3/8" LONG AT 6" ALTERNATE CENTERS. WELD TO EXTRUSIONS AND BEND AS SHOWN AFTER WELDING.
7. 3/4"Φ X 1 1/2" STAINLESS STEEL SOCKET FLAT HEAD SCREWS WITH ANTI-SEIZE LUBRICANT. PLACE IN COUNTERSUNK HOLE. RECESS 1/16" BELOW PLATE SURFACE.
8. 3/4"Φ X 4" GALVANIZED HEX HEAD BOLT. BEND 45°.
9. 3/4"Φ X 2 1/4" GALVANIZED THREADED COUPLING.
10. 1" X 5" SLOTTED COUNTERSUNK HOLE FOR NO. 7. PLACE SLOT PARALLEL TO DIRECTION OF MOVEMENT.
11. SIDEWALK COVER PLATE 3/8" X 2'-0" X LIMITS SHOWN WITH HOLES FOR NO. 7. GALVANIZE PLATE AFTER SLIP-RESISTANT SURFACE IS APPLIED.

◪ JOINT OPENING DIMENSION PLUS 1/2-INCH.

▩ BLOCK OUT CONCRETE ABOVE AND AT END OF EXTRUSIONS.

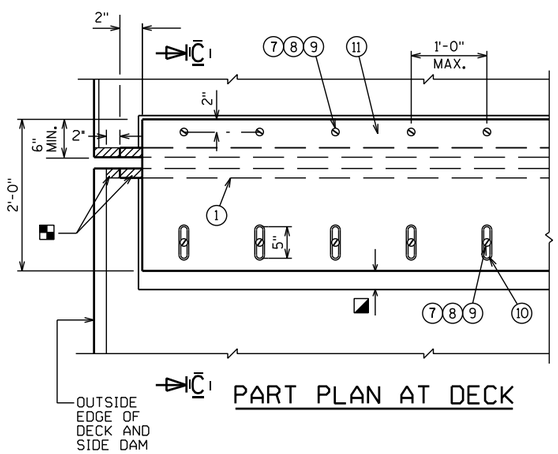

PART PLAN AT DECK

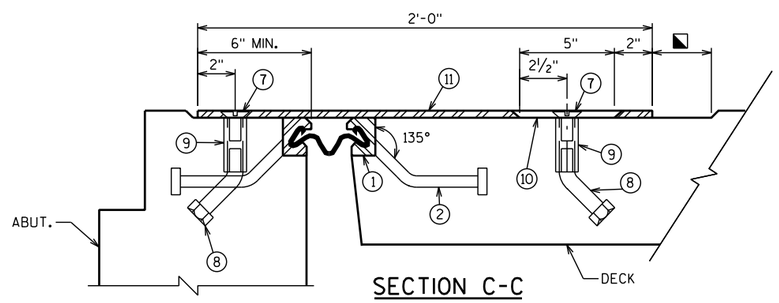

SECTION C-C

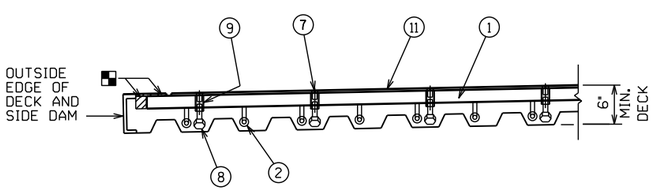

PART SECTION AT DECK

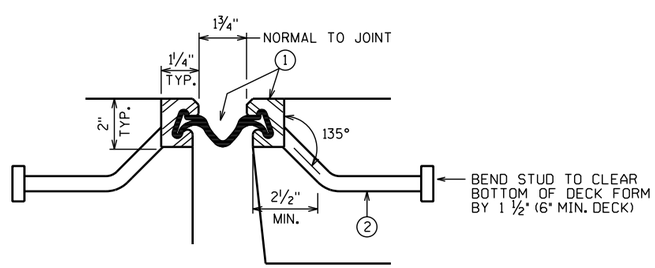

SECTION THRU JOINT

NOTES

NO FIELD SPLICE PERMITTED IN STEEL EXTRUSIONS. NO SPLICING PERMITTED IN NEOPRENE STRIP SEAL.

AFTER FABRICATION, BUT BEFORE SHIPMENT, STRAIGHTEN STEEL EXTRUSIONS SUCH THAT THEY SHALL BE FREE FROM WARP, TWIST AND SWEEP.

FABRICATOR SHALL PROVIDE MEANS OF KEEPING GALVANIZED EXTRUSIONS CLEAN AND SMOOTH DURING SHIPMENT AND PRIOR TO APPLYING LUBRICANT ADHESIVE FOR NEOPRENE GLAND INSTALLATION.

SANDBLAST PLATES, SUPPORTS AND EXTRUSIONS AFTER FABRICATION IN ACCORDANCE WITH SSPC SP. #6 "COMMERCIAL BLAST CLEANING". AFTER BLAST CLEANING, THE PLATES, SUPPORTS AND EXTRUSIONS SHALL BE HOT DIPPED GALVANIZED. SLIP-RESISTANT SURFACE IS APPLIED TO SIDEWALK COVER PLATES BY THE MANUFACTURER AND THEN HOT DIPPED GALVANIZED TO THEIR RECOMMENDATIONS TO MAINTAIN THE INTEGRITY OF THIS SURFACE.

ANCHOR SYSTEM NO. 8 AND NO. 9 SHALL CONFORM TO ASTM A307 AND SHALL BE GALVANIZED IN ACCORDANCE WITH ASTM A153 CLASS C AND D.

STRIP SEAL EXPANSION JOINT ASSEMBLY, INCLUDING ANCHOR STUDS AND HARDWARE WILL BE PAID FOR AT THE LUMP SUM PRICE BID FOR "EXPANSION DEVICE B-13-872".

KL Engineering
[A] Better Experience
5400 King James Way
Suite 200
Madison, WI. 53719
Phone: (608) 663-1218
Phone: (800)-810-4012
http://klengineering.com
email@klengineering.com

CITY OF FITCHBURG

EXPANSION DEVICE
B-13-872

Project No:	19-3488
Date:	OCT 2019
Designed By:	CDH
Drafted By:	STD
Checked By:	CDH

Revisions:

SHEET NO.

7 OF 8

FILE NAME : G:\FITCHBRG\18013-000\CIVIL3D\SHEETSPLAN\STRUCTURES CAD\080404-WD.DWG

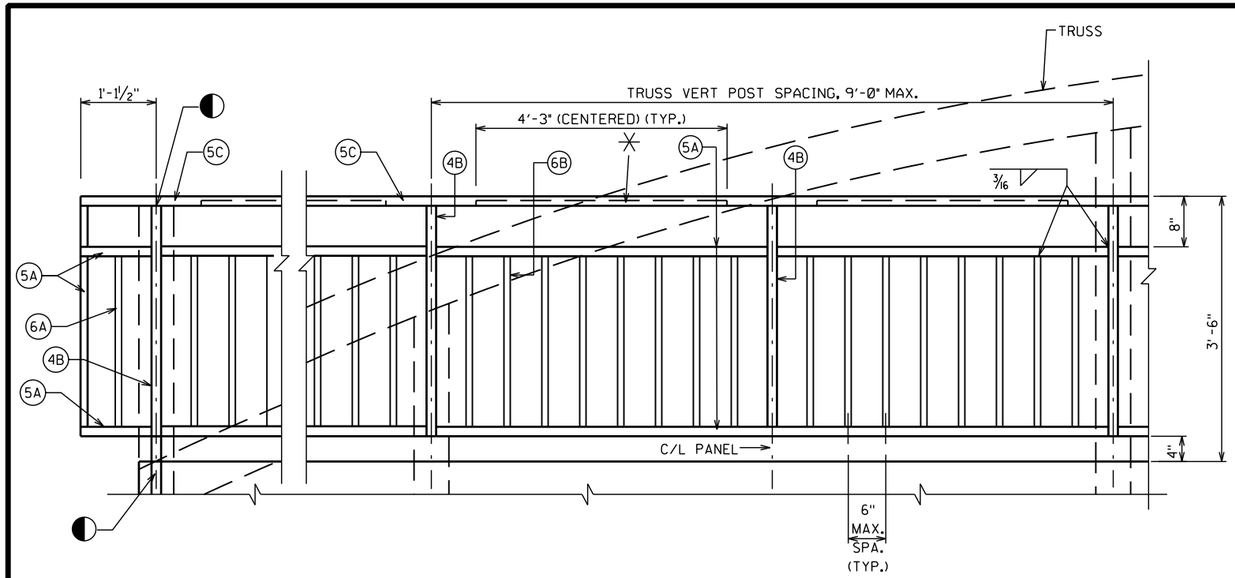

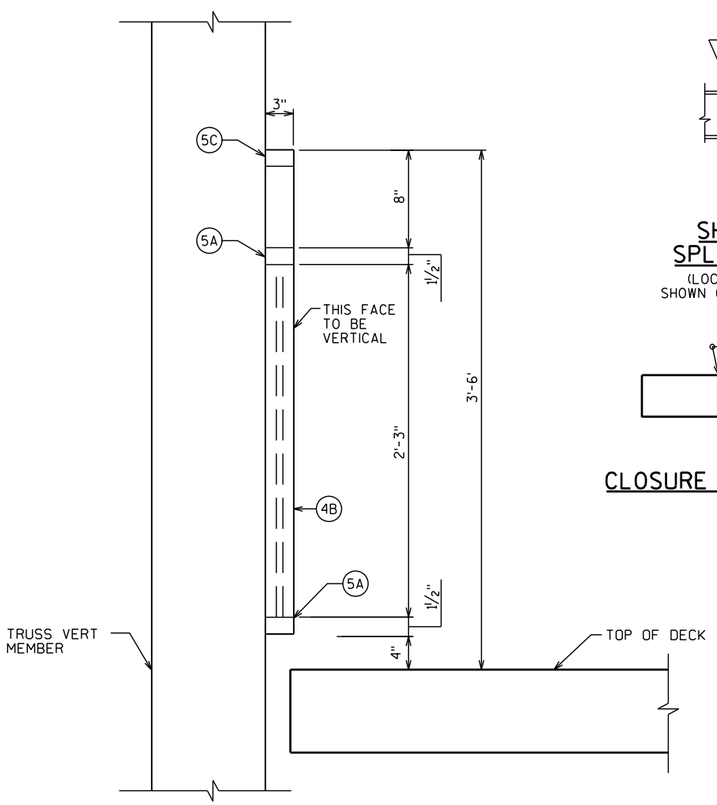

SECTION THRU RAILING

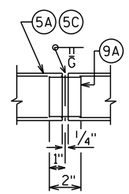

SHOP RAIL SPLICE DETAIL

(LOCATION MUST BE SHOWN ON SHOP DRAWINGS)

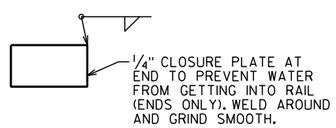

CLOSURE PLUG DETAIL

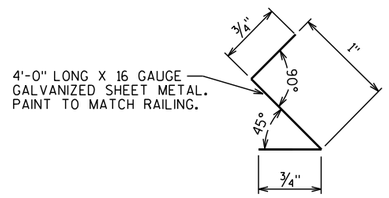

SHEET METAL DETAIL

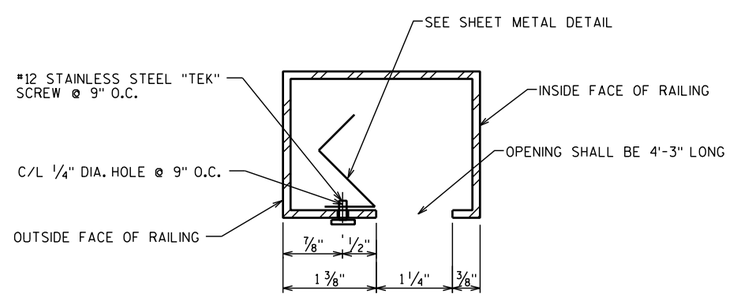

SECTION THRU TOP HORIZONTAL TUBE

LEGEND

- (4B) STRUCTURAL TUBING 3" X 3" X 3/16". PLACE VERTICAL. WELD TO NO. 1 & 5 & TRUSS.
- (5A) STRUCTURAL TUBING 3" X 1½" X 3/16" RAILS. WELD TO NO. 1 & NO. 4.
- (5C) STRUCTURAL TUBING 3" X 2" X 3/16" TOP RAIL. WELD TO NO. 1 & NO. 4. INSIDE OF TUBE TO BE PAINTED AT RECESSED LIGHTING LOCATIONS. PROVIDE MODIFICATIONS FOR RECESSED LIGHTING. SEE DETAILS THIS SHEET.
- (6B) BAR 1" X 1" PICKETS. WELD TO NO. 5. (SPACE AT 6" MAX. C/L TO C/L SPACING) PLACE VERTICAL.
- (9A) RECTANGULAR SLEEVE FABRICATED FROM 3/16" PLATES. PROVIDE "SLIDING FIT".
- ✳ 4'-3" LONG OPENING FOR LIGHTING, SEE DETAIL. PROVIDE OPENINGS AT ALL PANELS. SEE ELECTRICAL DRAWINGS.
- ◐ PROVIDE HOLE IN STRUCTURAL TUBING (4B) & (5C) FOR ELECTRICAL CONDUIT AT EACH END OF THE FOUR BRIDGE CORNERS. COORDINATE WITH THE ELECTRICAL CONTRACTOR. PROVIDE CONDUIT AS REQUIRED.

RAILING NOTES

ALL PLATES, BARS, AND RECTANGULAR SLEEVES SHALL CONFORM TO ASTM A709 GRADE 36. ALL STRUCTURAL TUBING SHALL CONFORM TO ASTM A500 GRADE B.

ALL MATERIAL SHALL BE GALVANIZED AFTER FABRICATION. PRIOR TO GALVANIZING, THE STEEL RAILING SHALL BE GIVEN A NO. 6 BLAST CLEANING PER SSPC SPECIFICATIONS. PAINT OVER GALVANIZING WITH AN APPROVED TIE COAT AND TOP COAT AS SPECIFIED IN THE CONTRACT DOCUMENTS. THE RAILING SHALL BE PAINTED FEDERAL COLOR NO. 14090.

VENT HOLES SHALL BE DRILLED IN POST AND RAIL MEMBERS AS REQUIRED TO FACILITATE GALVANIZING AND DRAINAGE.

TOUCH-UP PAINTING TO BE DONE AT COMPLETION OF STEEL RAILING INSTALLATION TO THE SATISFACTION OF THE ENGINEER AT NO EXTRA COST. ALL STEEL ITEMS SHOWN SHALL BE INCLUDED IN BID ITEMS "PREFABRICATION STEEL TRUSS PEDESTRIAN BRIDGE, B-13-872, LRFD".

COORDINATE RECESSED LIGHTING REQUIREMENTS WITH THE ELECTRICAL CONTRACTOR.

KL Engineering
[A] Better Experience
5400 King James Way
Suite 200
Madison, WI. 53719
Phone: (608) 663-1218
Phone: (800)-810-4012
http://klengineering.com
email@klengineering.com

CITY OF FITCHBURG

RAILING DETAILS
B-13-872

Project No:	19-3488
Date:	OCT 2019
Designed By:	CDH
Drafted By:	STD
Checked By:	CDH

Revisions:

SHEET NO.
8 OF 8

PLOT DATE : 5/8/2019 9:13 AM
PLOT BY : SCOTT DEMEUSE
FILE NAME : G:\FITCHBRG\18013-000\CIVIL3D\SHEETSPLAN\STRUCTURES CAD\080404-WD.DWG

PLOT DATE : 12/13/2019 11:39 AM
PLOT BY : JENNIFER LAUER

BENCHMARK TABLE

NO.	STATION	OFFSET	DESCRIPTION	ELEV.
57	563+59.29'SB'	64.92'RT	SE CORNER OF CONCRETE PARAPET, B-13-327	872.45

LEGEND

- REMOVE EXISTING INLET RISER AND CAP OPENING IN TOP SLAB
- REMOVE EXISTING CAP AND ADJUST OPENING. PROVIDE NEW INLET RISER.
- PROVIDE NEW OPENING IN TOP SLAB AND NEW INLET RISER.
- EXISTING INLET RISER TO REMAIN

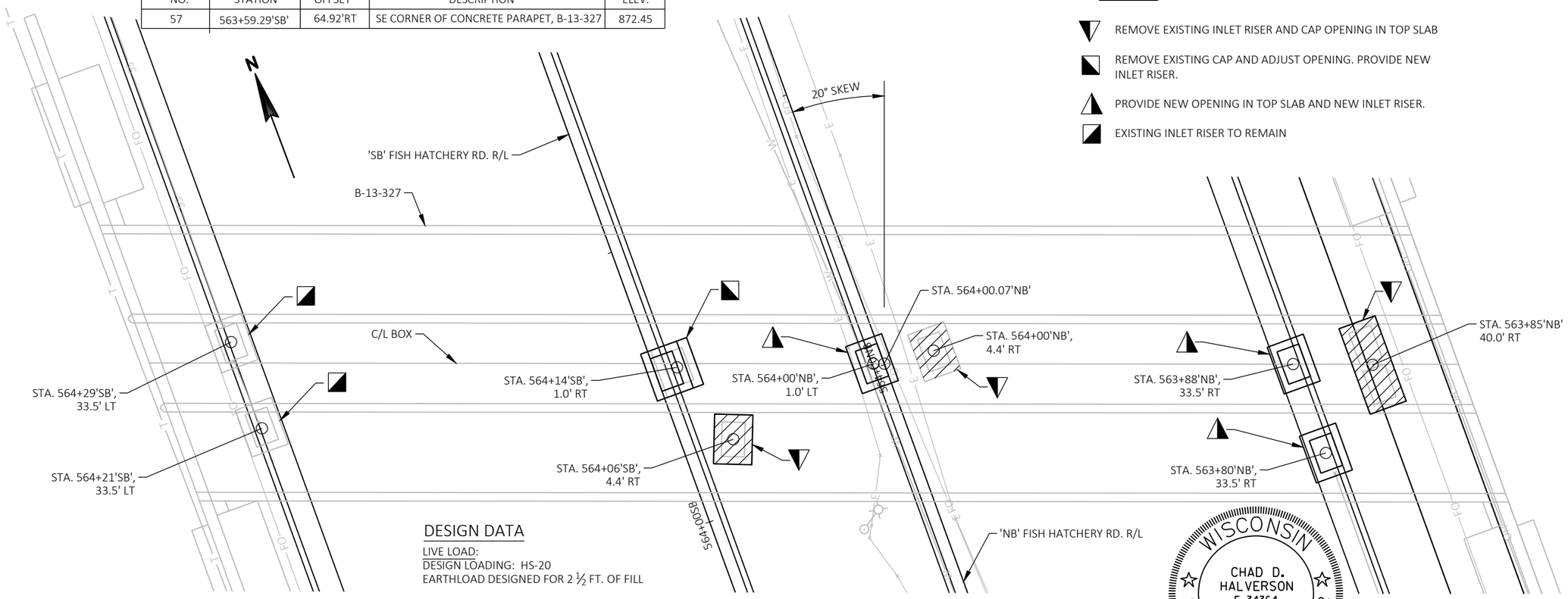

DESIGN DATA

LIVE LOAD:
DESIGN LOADING: HS-20
EARTHLOAD DESIGNED FOR 2 ½ FT. OF FILL

MATERIAL PROPERTIES:
CONCRETE MASONRY.....f'c = 4,000 P.S.I.
BAR STEEL REINFORCEMENT, GRADE 60....fy = 60,000 P.S.I.

TRAFFIC VOLUME

A.D.T. = 37,600 (2020)
= 39,200 (2040)
RDS = 40 MPH

WISCONSIN
CHAD D. HALVERSON
E-34364
MADISON, WI
PROFESSIONAL ENGINEER

December 13, 2019

LIST OF DRAWINGS

1. GENERAL PLAN
2. REMOVAL DETAILS
3. INLET DETAILS 1
4. INLET DETAILS 2
5. REPAIR DETAILS

TOTAL ESTIMATED QUANTITIES

ITEM NUMBER	ITEM DESCRIPTION	UNIT	TOTAL
902.01.01	REMOVING OLD STRUCTURE OVER WATERWAY STA 564NB+00	LS	1
902.02.01	EXCAVATION FOR STRUCTURES BRIDGES B-13-327	LS	1
902.03	CONCRETE MASONRY BRIDGES	CY	3
902.04	ADHESIVE ANCHORS 5/8-INCH	EACH	80
902.05	BAR STEEL REINFORCEMENT HS STRUCTURES	LB	370
902.06	RUBBERIZED MEMBRANE WATERPROOFING	SY	19
902.07	BACKFILL STRUCTURE TYPE A	TON	300
902.30	SAWING PAVEMENT DECK PREPARATION	LF	100
902.31	PREPARATION DECKC TYPE 1	SY	50
902.32	CONCRETE MASONRY DECK REPAIR	CY	3
902.33	CLEANING CULVERT TOP SLAB	SY	300
902.34	SHEET MEMBRANE WATERPROOFING FOR TOP SLAB B-13-327	SY	300
902.35	EPOXY CRACK SEALING	LF	200
902.36	PROTECTIVE SURFACE TRATMENT RESEAL	SY	14
902.37	CONCRETE SURFACE REPAIR	SF	40

GENERAL NOTES

DIMENSIONS SHOWN ARE BASED ON THE ORIGINAL STRUCTURE PLANS.

DRAWINGS SHALL NOT BE SCALED.

THE EXISTING STRUCTURE, B-13-327, IS A 3-CELL CONCRETE BOX CULVERT. REMOVE EXISTING INLET RISERS, CAPS AND TOP SLAB AS SHOWN IN PLAN DETAILS.

ALL CONCRETE REMOVAL NOTE COVERED WITH NEW CONCRETE SHALL BE DEFINED BY A 1-INCH DEEP SAW CUT.

LOWER LIMITS OF EXCAVATION FOR STRUCTURES SHALL BE THE TOP SURFACE OF THE EXISTING CULVERT.

LOCATIONS OF EXSISTING INLETS ARE APPROXIMATE. FIELD ADJUST LOCATIONS OF PROPOSED INLETS TO MATCH FIELD CONDITIONS AS DIRECTED BY THE ENGINEER.

INLET STATIONS AND OFFSETS PROVIDED TO THE CENTER OF THE OPENING.

UTILIZE EXISTING BAR STEEL REINFROCEMENT WHERE SHOWN AND EXTEND 24 BAR DIAMETERS INTO NEW WORK, UNLESS SPECIFIED OTHERWISE.

BAR STEEL REINFORCEMENT SHALL BE EMBEDDED 2-INCHES CLEAR UNLESS SHOWN OR NOTED OTHERWISE.

THE FIRST ONE OR FIRST TWO DIGITS OF THE BAR MARK SIGNIFIES THE BAR SIZE.

STRUCTURE DESIGN CONTACT
CHAD HALVERSON (608) 663-1218

KL Engineering
[A] Better Experience
5400 King James Way
Suite 200
Madison, WI. 53719
Phone: (608) 663-1218
Phone: (800)-810-4012
http://klengineering.com
email@klengineering.com

CITY OF FITCHBURG

GENERAL PLAN B-13-327

NO.	DATE	REVISION	BY

KL Engineering [A] Better Experience

STRUCTURE B-13-327

FISH HATCHERY ROAD/CTH "D" OVER NINE SPRINGS CREEK

COUNTY DANE | ~~TOWN~~/CITY/~~VILLAGE~~ FITCHBURG

DESIGN SPEC. REHABILITATION – N/A

DESIGNED BY CDH	DESIGN CK'D. CAH	DRAWN BY STD	PLANS CK'D. CDH

GENERAL PLAN

SHEET 1 OF 5

Project No: 18013
Date: 7-29-2019
Designed By: CDH
Drafted By: STD
Checked By: CAH

Revisions:

SHEET NO. 1 OF 5

FILE NAME : G:\FITCHBRG\18013-000\CIVIL3D\SHEETSPLAN\STRUCTURES CAD\080201-GP .DWG

PLOT DATE : 7/18/2019 1:55 PM
PLOT BY : SCOTT DEMEUSE
FILE NAME : G:\FITCHBRG\18013-000\CIVIL3D\SHEETSPLAN\STRUCTURES CAD\080202-REM_DET.DWG

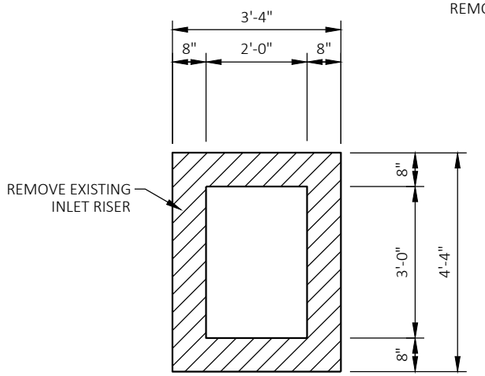

PLAN

STA. 564+06'SB', 4.4' RT
STA. 564+00'NB', 4.4' RT

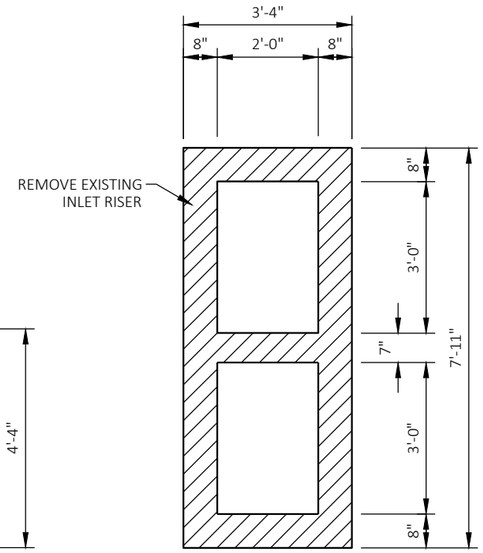

PLAN

STA. 563+85'NB', 40.0' RT

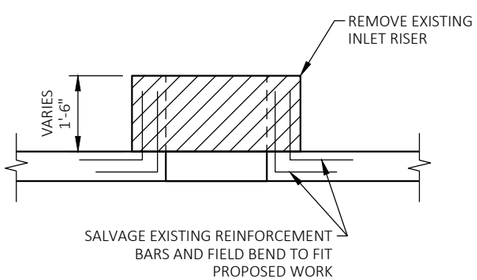

SECTION

RISER REMOVAL DETAILS

STA. 564+06'SB', 4.4' RT
STA. 564+00'NB', 4.4' RT
STA. 563+85'NB', 40.0' RT

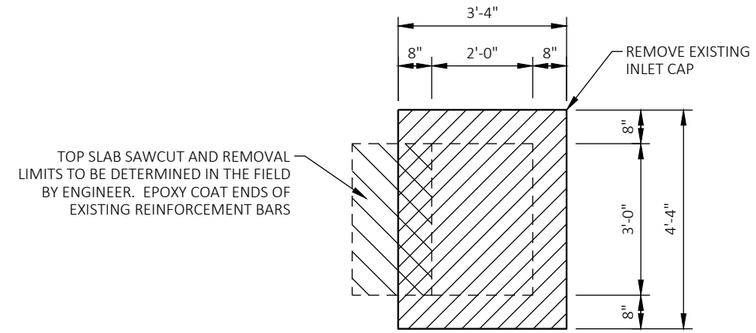

PLAN

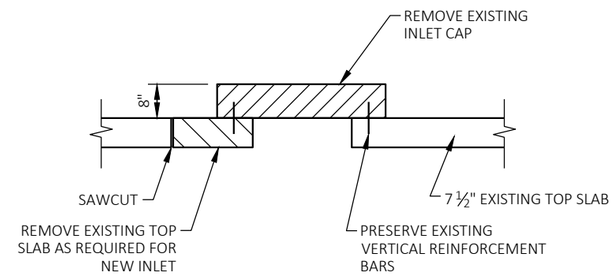

SECTION

CAP REMOVAL DETAILS

STA. 564+14'SB', 1.0' RT

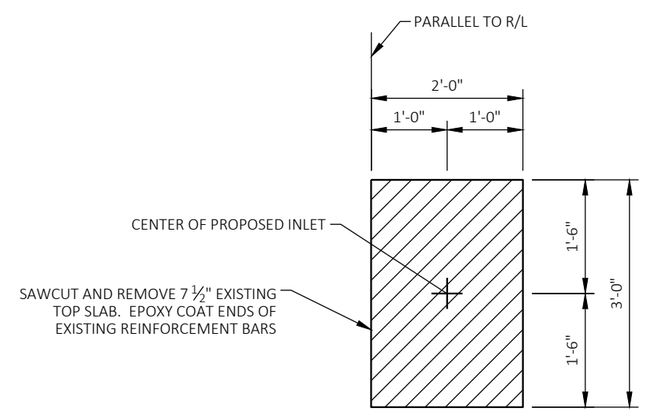

TOP SLAB REMOVAL DETAILS

STA. 564+00'NB', 1.0' LT
STA. 563+80'NB', 33.5' RT
STA. 563+88'NB', 33.5' RT

KL Engineering
[A] Better Experience
5400 King James Way
Suite 200
Madison, WI. 53719
Phone: (608) 663-1218
Phone: (800)-810-4012
http://klengineering.com
email@klengineering.com

CITY OF FITCHBURG

REMOVAL DETAILS
B-13-327

Project No:	19-3488
Date:	OCT 2019
Designed By:	CDH
Drafted By:	STD
Checked By:	CAH

Revisions:

SHEET NO.

2 OF 5

PLOT DATE : 7/18/2019 1:57 PM
PLOT BY : SCOTT DEMEUSE
FILE NAME : G:\FITCHBRG\18013-000\CIVIL3D\SHEETSPLAN\STRUCTURES CAD\080203-DET.DWG

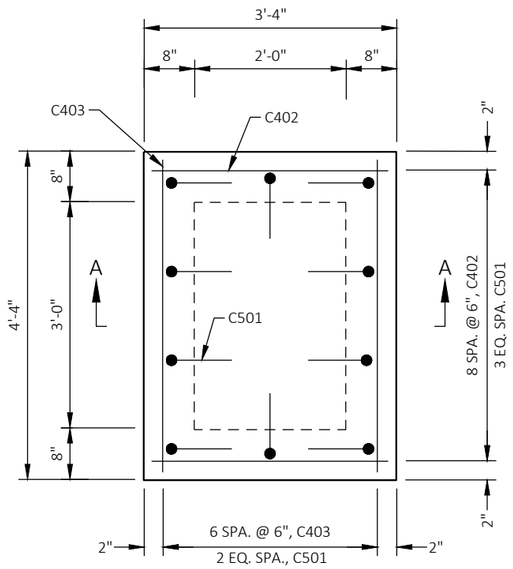

PLAN

STA. 564+06'SB', 4.4' RT
STA. 564+00'NB', 4.4' RT

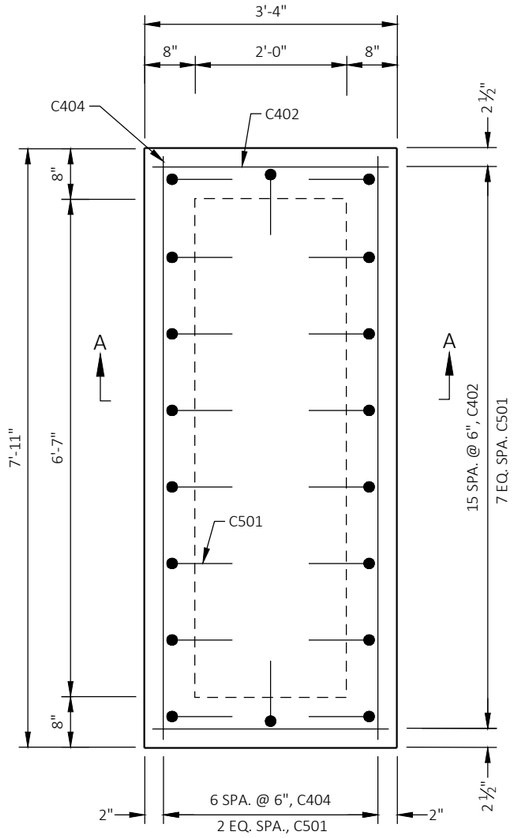

PLAN

STA. 563+85'NB', 40.0' RT

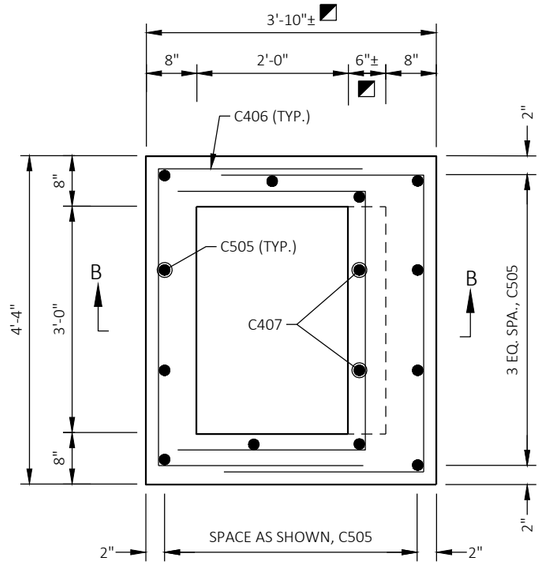

PLAN

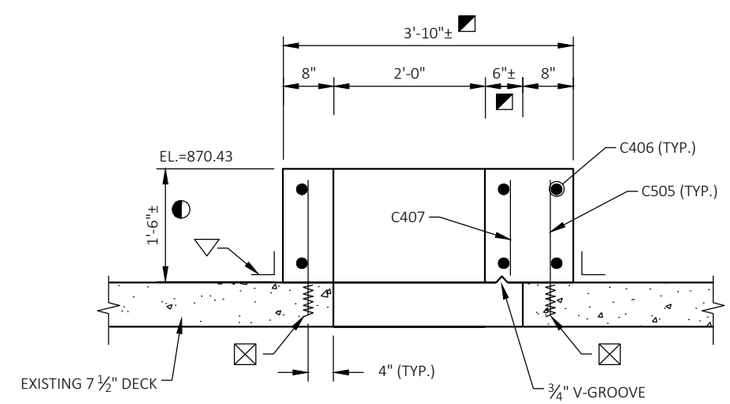

SECTION B-B

INLET DETAILS

STA. 564+14'SB', 1.0' RT

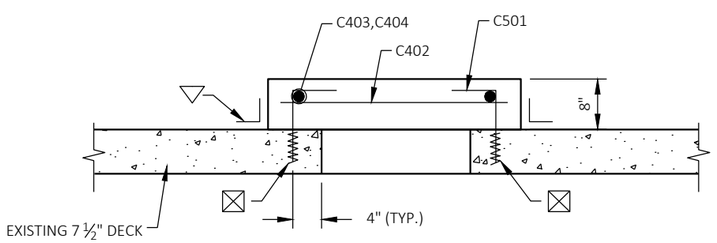

SECTION A-A

CAP DETAILS

STA. 564+06'SB', 4.4' RT
STA. 564+00'NB', 4.4' RT
STA. 563+85'NB', 40.0' RT

LEGEND

- DIMENSION ESTIMATED, FIELD VERIFY
- ADHESIVE ANCHORS NO. 5 BAR. EMBED 3-INCHES IN CONCRETE
- RUBBERIZED MEMBRANE WATERPROOFING ALL AROUND
- APPROXIMATE RISER HEIGHT, FIELD VERIFY.

KL Engineering
[A] Better Experience
5400 King James Way
Suite 200
Madison, WI. 53719
Phone: (608) 663-1218
Phone: (800)-810-4012
http://klengineering.com
email@klengineering.com

CITY OF FITCHBURG

INLET DETAILS 1
B-13-327

Project No:	19-3488
Date:	OCT 2019
Designed By:	CDH
Drafted By:	STD
Checked By:	CAH

Revisions:

SHEET NO.

3 OF 5

PLOT DATE : 7/18/2019 1:59 PM
PLOT BY : SCOTT DEMEUSE
FILE NAME : G:\FITCHBRG\18013-000\CIVIL3D\SHEETSPLAN\STRUCTURES CAD\080204-DET-2.DWG

BILL OF BARS

UNCOATED TOTAL = 370 LBS

BAR MARK	NO. REQ'D.	LENGTH	COAT	BENT	LOCATION
C 501	38	1'-4"		X	VERT DOWELS
C 402	34	3'-0"			HORIZ
C 403	14	4'-0"			HORIZ
C 404	7	7'-7"			HORIZ
C 505	42	1'-7"			VERT DOWELS
C 406	18	8'-8"		X	HORIZ
C 407	2	1'-2"			VERT

NOTE:

TRIM C505 BARS IN FIELD TO PROVIDE 2" CLEAR COVER.

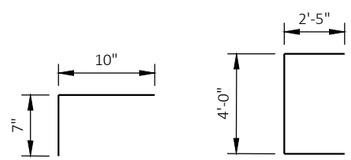

C501 C406

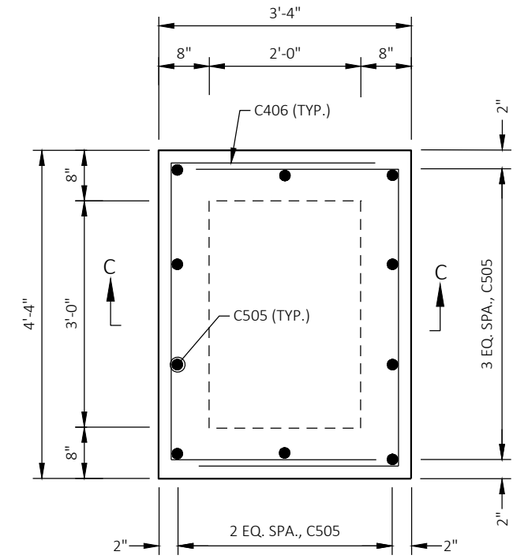

PLAN

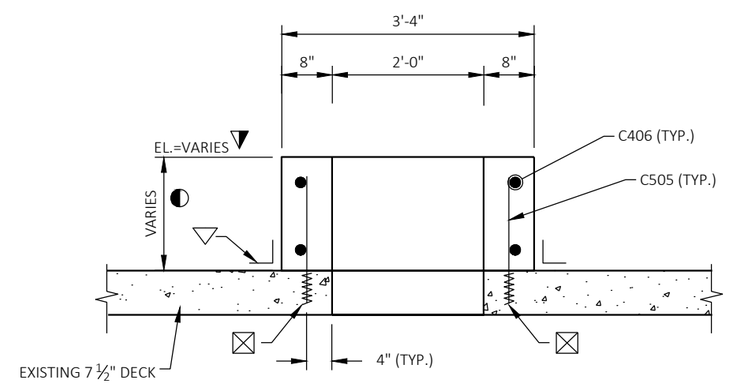

SECTION C-C

INLET DETAILS

STA. 564+00'NB', 1.0' LT
STA. 563+80'NB', 33.5' RT
STA. 563+88'NB', 33.5' RT

LOCATION	ELEV. TOP RISER	RISER HEIGHT
STA. 564+00'NB', 1.0' LT	870.00	1'-1'
STA. 563+80'NB', 33.5' RT	869.34	10"
STA. 563+88'NB', 33.5' RT	869.34	8"

LEGEND

- APPROXIMATE RISER HEIGHT, FIELD VERIFY
- ADHESIVE ANCHORS NO. 5 BAR. EMBED 3-INCHES IN CONCRETE
- RUBBERIZED MEMBRANE WATERPROOFING ALL AROUND

KL Engineering
[A] Better Experience
5400 King James Way
Suite 200
Madison, WI. 53719
Phone: (608) 663-1218
Phone: (800)-810-4012
http://klengineering.com
email@klengineering.com

CITY OF FITCHBURG

INLET DETAILS 2
B-13-327

Project No: 19-3488
Date: OCT 2019
Designed By: CDH
Drafted By: STD
Checked By: CAH

Revisions:

SHEET NO.

4 OF 5

PLOT DATE : 7/18/2019 2:16 PM
PLOT BY : SCOTT DEMEUSE
FILE NAME : G:\FITCHBRG\180113-000\CIVIL3D\SHEETSPLAN\STRUCTURES CAD\080205-DET-3.DWG

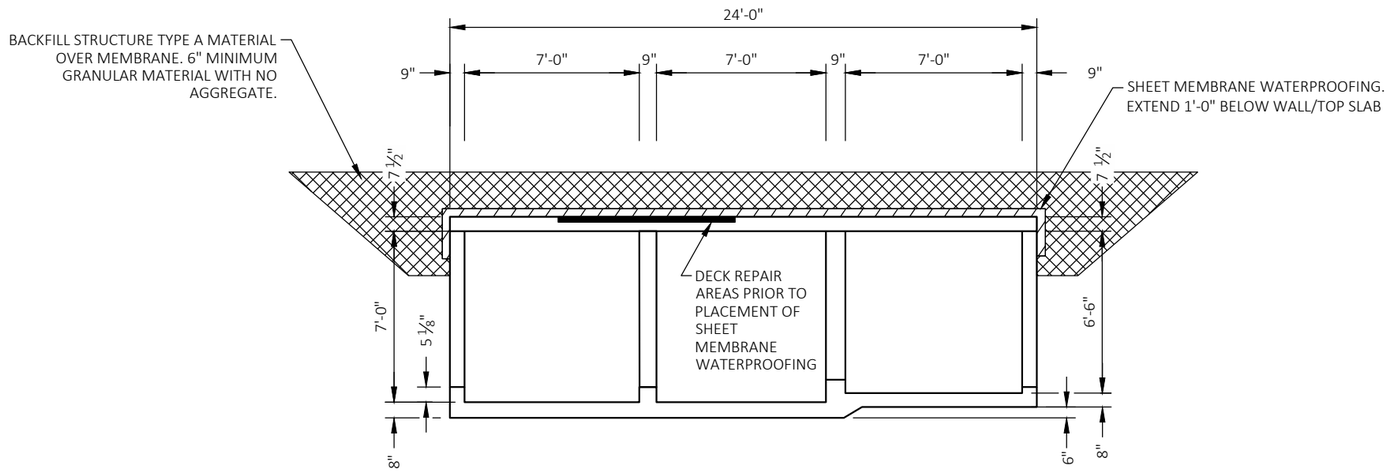

TYPICAL SECTION THU BOX

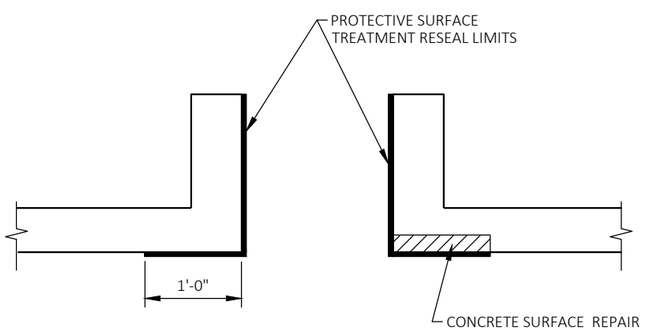

INLET REPAIR DETAILS

NOTES:

LIMITS FOR DECK PREPARATION TYPE 1 ON THE TOP SLAB TO BE DETERMINED IN THE FIELD BY THE ENGINEER AFTER EXCAVATION AND REMOVAL OF EXISTING INLETS AND INLET OPENINGS ARE COMPLETE.

CLEANING CULVERT TOP SLAB TO BE PERFORMED AFTER ALL INLET RECONSTRUCTION WORK IS COMPLETE AND SHALL IMMEDIATELY PRECEED INSTALLATION OF SHEET MEMBRANE WATERPROOFING FOR TOP SLAB.

LIMITS OF CONCRETE SURFACE REPAIR AND EPOXY CRACK SEALING ON INTERIOR OF BOX CELLS TO BE DETERMINED IN THE FIELD BY THE ENGINEER.

APPLY PROTECTIVE SURFACE TREATMENT RESEAL AT ALL INLET RISERS AND 1'-0" MIN. OF BOTTOM OF TOP SLAB AROUND ALL INLETS.

KL Engineering
[A] Better Experience
5400 King James Way
Suite 200
Madison, WI. 53719
Phone: (608) 663-1218
Phone: (800)-810-4012
http://klengineering.com
email@klengineering.com

CITY OF FITCHBURG

REPAIR DETIALS
B-13-327

Project No:	19-3488
Date:	OCT 2019
Designed By:	CDH
Drafted By:	STD
Checked By:	CAH

Revisions:

SHEET NO.

5 OF 5

PLOT DATE : 12/13/2019 11:50 AM

PLOT BY : JENNIFER LAUER

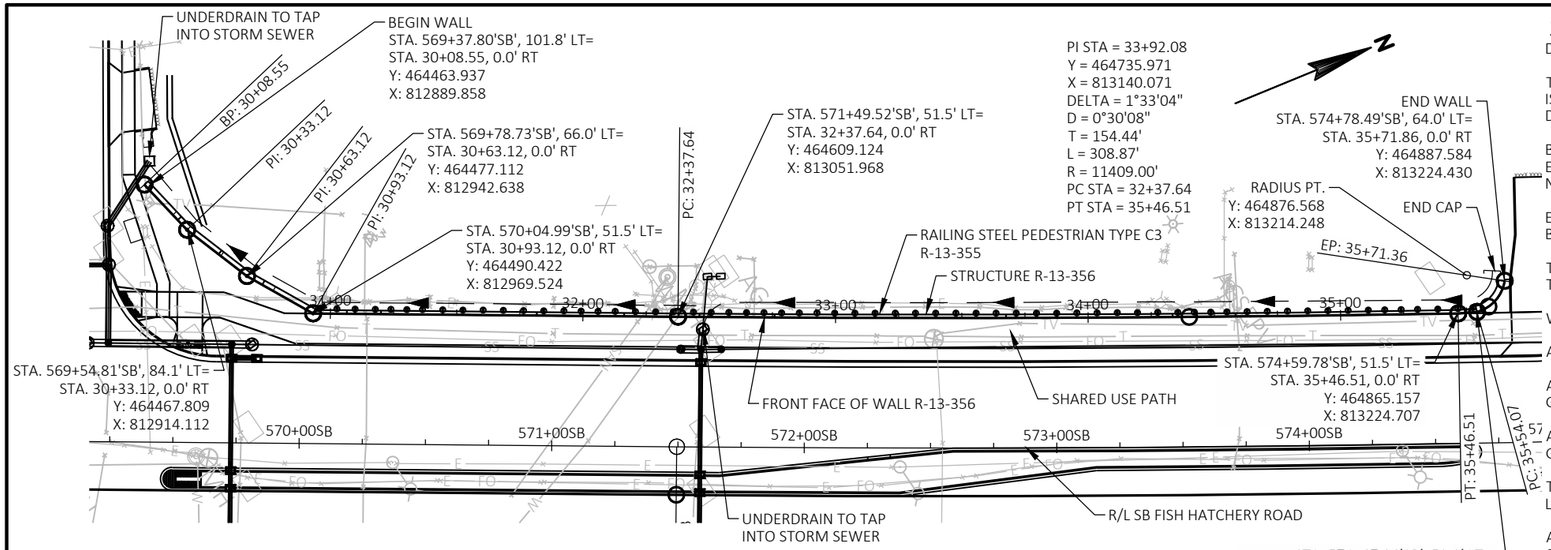

PLAN

(WALL MODULAR BLOCK GRAVITY LRFD, AND SOLDIER PILE WALL, R-13-356)

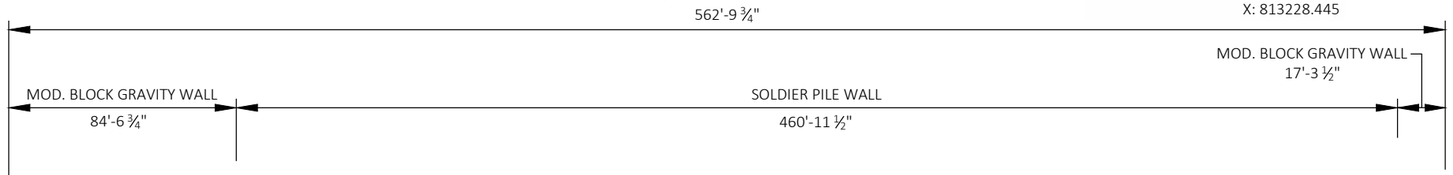

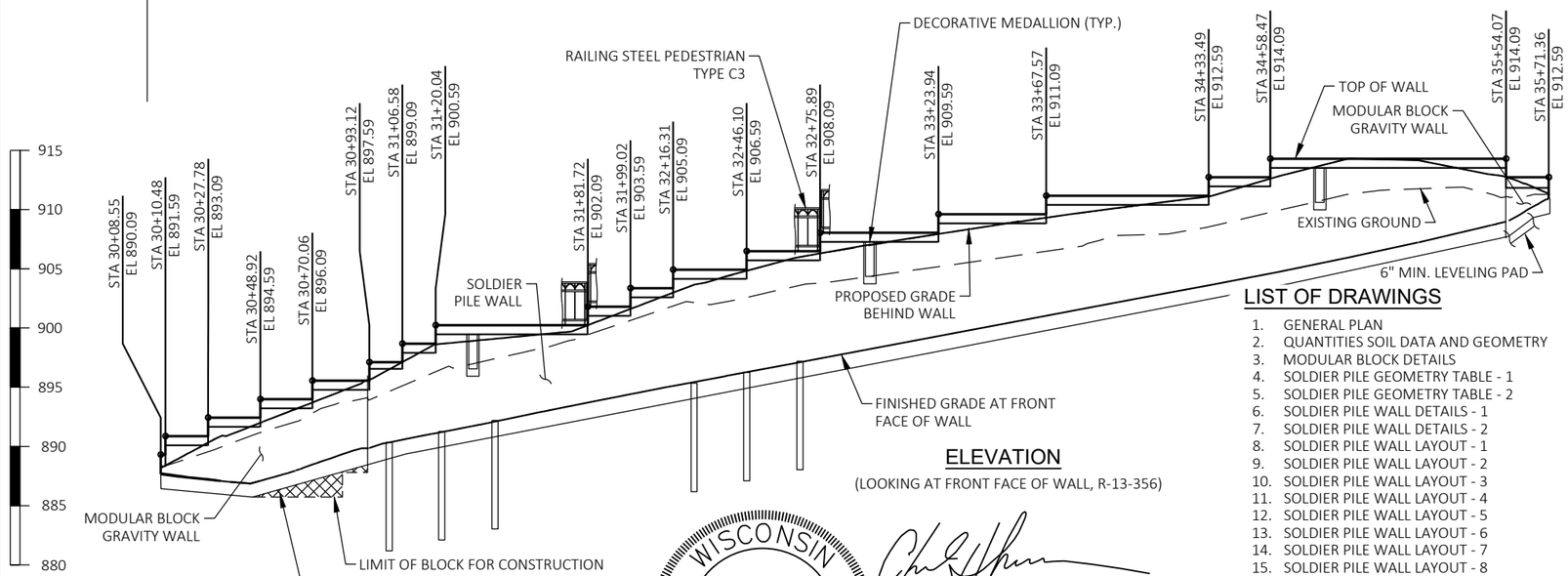

ELEVATION

(LOOKING AT FRONT FACE OF WALL, R-13-356)

WISCONSIN
CHAD D. HALVERSON
E-34364
MADISON, WI
PROFESSIONAL ENGINEER

December 13, 2019

STRUCTURE DESIGN CONTACT
CHAD HALVERSON (608) 663-1218

GENERAL NOTES

DRAWINGS SHALL NOT BE SCALED

THE PLAN QUANTITY FOR THE BID ITEM "WALL MODULAR BLOCK GRAVITY LRFD R-13-356" IS BASED ON A WALL HEIGHT MEASURED FROM THE TOP OF THE WALL TO A CONSTANT DEPTH OF 1'-6" BELOW FINISHED GRADE.

BLOCK FACE SHALL HAVE THE APPEARANCE OF REDI-ROCK LEDGE STONE OR APPROVED EQUAL. COLOR TO BE FEDERAL COLOR NO. 33448. COPING COLOR TO BE FEDERAL COLOR NO. 26134.

EXCAVATION FOR MODULAR BLOCK WALL IS INCLUDED WITH ITEM "WALL MODULAR BLOCK GRAVITY LRFD R-13-356".

THE EXISTING GROUND LINE IS THE UPPER LIMIT OF EXCAVATION FOR STRUCTURES FOR THE SOLDIER PILE WALL.

WEATHERED ROCK IS EXPECTED WITHIN THE WALL EXCAVATION LIMITS.

ALL STATION AND ALL ELEVATIONS ARE IN FEET.

ALL DIMENSIONS AND STATIONING ARE ALONG THE FRONT FACE OF WALL AT FINISHED GROUND, UNLESS SHOWN OTHERWISE.

ALL STRUCTURAL STEEL SHALL CONFORM TO THE REQUIREMENTS OF AASHTO M270 GRADE 50 EXCEPT AS NOTED ON THE PLANS.

THE CONTRACTOR IS RESPONSIBLE FOR THE DESIGN AND PERFORMANCE OF THE TIMBER LAGGING.

ANY ADDITIONAL SHORING REQUIRED TO CONSTRUCT WALL SHALL BE THE RESPONSIBILTY OF THE CONTRACTOR.

DESIGN DATA

THE CONTRACTOR SHALL PROVIDE COMPLETE DESIGN, PLANS, DETAILS, SPECIFICATIONS, AND SHOP DRAWINGS FOR THE RETAINING WALLS IN ACCORDANCE WITH THE SPECIAL PROVISIONS. THE MODULAR BLOCK RETAINING WALL MANUFACTURER SHALL PROVIDE TECHNICAL ASSISTANCE TO THE CONTRACTOR DURING CONSTRUCTION. THE COST OF FURNISHING THESE ITEMS SHALL BE INCLUDED IN THE BID ITEM "WALL MODULAR BLOCK GRAVITY LRFD R-13-356".

PLANS, ELEVATIONS AND DETAILS SHOWN ON THESE DRAWINGS ARE INTENDED TO INDICATE WALL LOCATIONS, LENGTHS, HEIGHTS, AND DETAILS COMMON TO THE WALL SYSTEM SELECTED. THE CONTRACTOR SHALL VERIFY THAT THE WALL SYSTEM SELECTED WILL CONFORM TO THE REQUIRED ALIGNMENTS AND DETAILS.

THE RETAINING WALL IS TO BE DESIGNED USING ELEVATIONS GIVEN ON THIS SHEET AND IN THE GEOMETRY TABLE.

DESIGN FOR RETAINING WALL TO PROVIDE FOR FINISHED GRADE SLOPED BEHIND WALL AS SHOWN ON THE TYPICAL WALL SECTION AND ROADWAY CROSS SECTIONS.

DESIGN RETAINING WALL FOR A LIVE LOAD OF 100 PSF. FOR AREAS IN FRONT OF PARKING LOTS DESIGN FOR A LIVE LOAD OF 170 PSF.

CONTRACTOR TO VERIFY STEP LOCATIONS BASED ON BLOCK LENGTHS USED. WALL WAS DESIGNED USING REDI-ROCK BLOCK DIMENSIONS. ADJUST COPING AND RAIL SPACING ACCORDINGLY.

LIVE LOAD

LIVE LOAD SURCHARGE..... 100 P.S.F.
LIVE LOAD SURCHARGE (PARKING LOTS)... 170 P.S.F.

MATERIAL PROPERTIES:

CONCRETE MASONRY:
RETAINING WALLS..... f'c = 4,000 P.S.I.
SOLDIER PILE FOOTING..... f'c = 3,500 P.S.I.

BAR STEEL REINFORCEMENT, GRADE 60....fy = 60,000 P.S.I.

STRUCTURAL STEEL HS.....fy = 50,000 P.S.I

*TIMBER LAGGING.....Fb = 975 P.S.I.
Fv = 90 P.S.I.
Fc = 565 P.S.I.
E = 1,600,000 P.S.I.

* MATERIAL VALUES BASE ON DOUGLAS FIR-LARCH (NO. 2) OR SOUTHERN PINE (NO. 2), CONSTRUCTION GRADE, ROUGH CUT LUMBER.

LIST OF DRAWINGS

1. GENERAL PLAN
2. QUANTITIES SOIL DATA AND GEOMETRY
3. MODULAR BLOCK DETAILS
4. SOLDIER PILE GEOMETRY TABLE - 1
5. SOLDIER PILE GEOMETRY TABLE - 2
6. SOLDIER PILE WALL DETAILS - 1
7. SOLDIER PILE WALL DETAILS - 2
8. SOLDIER PILE WALL LAYOUT - 1
9. SOLDIER PILE WALL LAYOUT - 2
10. SOLDIER PILE WALL LAYOUT - 3
11. SOLDIER PILE WALL LAYOUT - 4
12. SOLDIER PILE WALL LAYOUT - 5
13. SOLDIER PILE WALL LAYOUT - 6
14. SOLDIER PILE WALL LAYOUT - 7
15. SOLDIER PILE WALL LAYOUT - 8
16. WALL REINFORCEMENT - 1
17. WALL REINFORCEMENT - 2
18. WALL REINFORCEMENT - 4
19. WALL REINFORCEMENT - 5
20. WALL REINFORCEMENT DETAILS
21. AESTHETIC DETAILS
22. RAILING STEEL PEDESTRIAN TYPE C3
23. RAILING LAYOUT - 1
24. RAILING LAYOUT - 2
25. SUBSURFACE EXPLORATION

KL Engineering
[A] Better Experience
5400 King James Way
Suite 200
Madison, WI. 53719
Phone: (608) 663-1218
Phone: (800)-810-4012
http://klengineering.com
email@klengineering.com

CITY OF FITCHBURG

GENERAL PLAN R-13-356

Project No:	18013
Date:	7-29-2019
Designed By:	CDH
Drafted By:	STD
Checked By:	CAH

Revisions:

SHEET NO.

1 OF 25

FILE NAME : G:\FITCHBRG\18013-000\CIVIL3D\SHEETSPLAN\STRUCTURES CAD\080501-GP.DWG

PLOT DATE : 7/29/2019 2:39 PM
PLOT BY : COLE HERNIKL
FILE NAME : G:\FITCHBRG\18013-000\CIVIL3D\SHEETSPLAN\STRUCTURES CAD\080502-GN.DWG

SOIL PARAMETERS

*DESIGN WALLS FOR THESE VALUES.

STRATUM LOCATION & SOIL DESIGN	TOTAL UNIT WEIGHT (PCF)	FRACTION ANGLE (DEGREES)	COHESION (PCF)
RETAINED SOIL (GRANULAR BACKFILL) *	135.0	30	0
BORING 8 (STA. 570+00'SB')			
LEAN CLAY (CL) 894.0 FT - 893.6 FT	125.0	0	500
SILTY SAND WITH GRAVEL (SM) 893.6 FT - 889.0 FT	125.0	29	0
SILTY SAND WITH GRAVEL (SM) 889.0 FT - 885.3 FT	125.0	32	0
BORINGS 9 - 11 (SOLDIER PILE WALL SECTION)			
6 INCHES OF FILL TOPSOIL	125.0	25	0
4.5 FEET OF FILL MATERIAL	130.0	28	0
7.0 FEET OF FILL MATERIAL	130.0	29	0
BORING 11X (STA. 573+53'SB')			
LEAN CLAY (CL) 910.8 FT - 910.1 FT	125.0	0	500
SILTY SAND WITH FILL (SM) 910.1 FT - 907.8 FT	125.0	28	0
SILTY SAND WITH FILL (SM) 907.8 FT - 904.3 FT	125.0	29	0
DOLOMITE 904.3 FT - 896.3 FT	149.0	45	0
SANDSTONE 896.3 FT - 894.3 FT	149.0	45	0

BENCHMARK TABLE

NO.	STATION	OFFSET	DESCRIPTION	ELEV.
58	569+37.86'SB'	80.55' LT	WEST CORNER OF CONCRETE PAD EPED	888.55
59	574+52.20'SB'	58.73' LT	SOUTH SIDE OF CONCRETE BASE TFSM	929.34

TOTAL ESTIMATED QUANTITIES

ITEM NUMBER	ITEM DESCRIPTION	UNIT	TOTAL
318.20	GEOTEXTILE TYPE DF SCHEDULE A	SY	180
648.20	PIPE UNDERDRAIN WRAPPED 6-INCH	LF	600
902.10	BAR STEEL REINFORCEMENT HS STRUCTURES	LB	19,650
902.18.04	RAILING STEEL PEDESTRIAN TYPE C3	LF	553
902.19.04	CONCRETE STAINING R-13-356	SF	6,760
902.20.04	WALL MODULAR BLOCK GRAVITY LRFD, R-13-356	SF	630
902.21	EXCAVATION FOR STRUCTURES RETAINING WALLS R-13-356	LS	1
902.22	CONCRETE MASONRY SOLDIER PILE FOOTINGS	CY	82
902.23	CONCRETE MASONRY RETAINING WALLS	CY	210
902.24	STRUCTURAL STEEL HS	LB	149,860
902.25	WELDED STUD SHEAR CONNECTORS 3/4X5-INCH	EACH	694
902.26	ARCHITECTURAL SURFACE TREATMENT R-13-356	SF	4,400
902.27	FOUNDATION DRILLING 24-INCH	LF	707
902.28	TIMBER LAGGING	MBM	10.5
902.29	GEOCOMPOSITE DRAIN BOARD	SF	3,510
	NON-BID ITEMS		
	PREFORMED JOINT FILLER	SIZE	3/4", 1"
	NON-BITUMINOUS JOINT SEALER		

WALL EXTERNAL & OVERALL STABILITY EVALUATION

RETAINING WALL DIMENSIONS			
WALL CROSS-SECTION STATION	30+89.4	35+55	
APPLICABLE BORINGS [1]	8	11X	
LIVE LOAD SURCHARGE (PSF)	100	100	
DEAD LOAD SURCHARGE (PSF)	0	0	
TOTAL WALL HEIGHT (FT)	6.75	5.10	
EXPOSED WALL HEIGHT (FT)	5.25	3.60	
WALL EMBEDMENT (FT)	1.50	1.50	
BOTTOM BLOCK DEPTH (IN)	60	--	
WALL BATTER (DEGREES)[2]	3.6 / 7.2	--	
RETAINING WALL EXTERNAL STABILITY ANALYSES RESULTS			
SLIDING (CDR > 1.0)	1.3 / 1.5	--	
ECCENTRICITY (CDR > 1.0)	1.8 / 2.9	--	
GLOBAL STABILITY (CDR > 1.0) [3]	4.7 / --	--	
BEARING RESISTANCE (CDR > 1.0)	2.5 / 3.0	--	
REQUIRED BEARING RESISTANCE (PSF)	3,800 / 3,900	--	
SETTLEMENT (IN)	<0.5	--	

NOTES:

[1] IF MORE THAN ONE BORING IS LISTED, THEN THE COMPOSITE SOIL VALUES WERE USED FOR ANALYSES.

[2] THE WALL BATTER IS MEASURED FROM THE VERTICAL.

[3] GLOBAL STABILITY IS ONLY EVALUATED AT THE CRITICAL WALL LOCATION.

CDR = CAPACITY DEMAND RATIO PSF = POUNDS PER SQUARE FOOT

GEOMETRY TABLE

MODULAR BLOCK GRAVITY WALL

DESCRIPTION	FHR STA	OFFSET	WALL STA	TOP WALL EL	F.F. FINISHED GRADE	B.F. FINISHED GRADE
BEGIN WALL	569+35.12	104.6	30+08.55	890.09	888.59	889.05
	569+39.13	100.43	30+10.48	890.09	888.42	889.21
STEP	569+39.13	100.43	30+10.48	891.59	888.42	889.21
	569+49.19	89.96	30+25.00	891.59	888.14	890.75
	569+51.12	87.96	30+27.78	891.59	888.09	891.06
STEP	569+51.12	87.96	30+27.78	893.09	888.09	891.06
	569+67.41	74.57	30+48.92	893.09	888.09	892.66
STEP	569+67.41	74.57	30+48.92	894.59	888.09	892.66
	569+68.27	73.91	30+50.00	894.59	888.15	892.75
	569+84.80	62.637	30+70.06	894.59	889.33	894.31
STEP	569+84.80	62.637	30+70.06	896.09	889.33	894.31
	569+89.13	60.25	30+75.00	896.09	889.62	894.70
END WALL	570+04.99	51.5	30+93.12	896.09	890.76	896.09
BEGIN WALL	574+67.36	51.97	35+54.07	912.59	908.98	912.59
	574+72.70	54.53	35+60.00	912.59	909.59	912.18
END WALL	574+78.49	64.01	35+71.36	912.59	910.82	911.32

KL Engineering
[A] Better Experience
5400 King James Way
Suite 200
Madison, WI. 53719
Phone: (608) 663-1218
Phone: (800)-810-4012
http://klengineering.com
email@klengineering.com

CITY OF FITCHBURG

QUANTITIES, SOIL DATA AND GEOMETRY R-13-356

Project No: 19-3488
Date: OCT 2019
Designed By: CAH
Drafted By: STD
Checked By: CDH

Revisions:

SHEET NO.

2 OF 25

PLOT DATE : 7/28/2019 10:39 AM

PLOT BY : SCOTT DEMEUSE

FILE NAME : G:\FITCHBRG\18013-000\CIVIL3D\SHEETSPLAN\STRUCTURES CAD\080503-XS.DWG

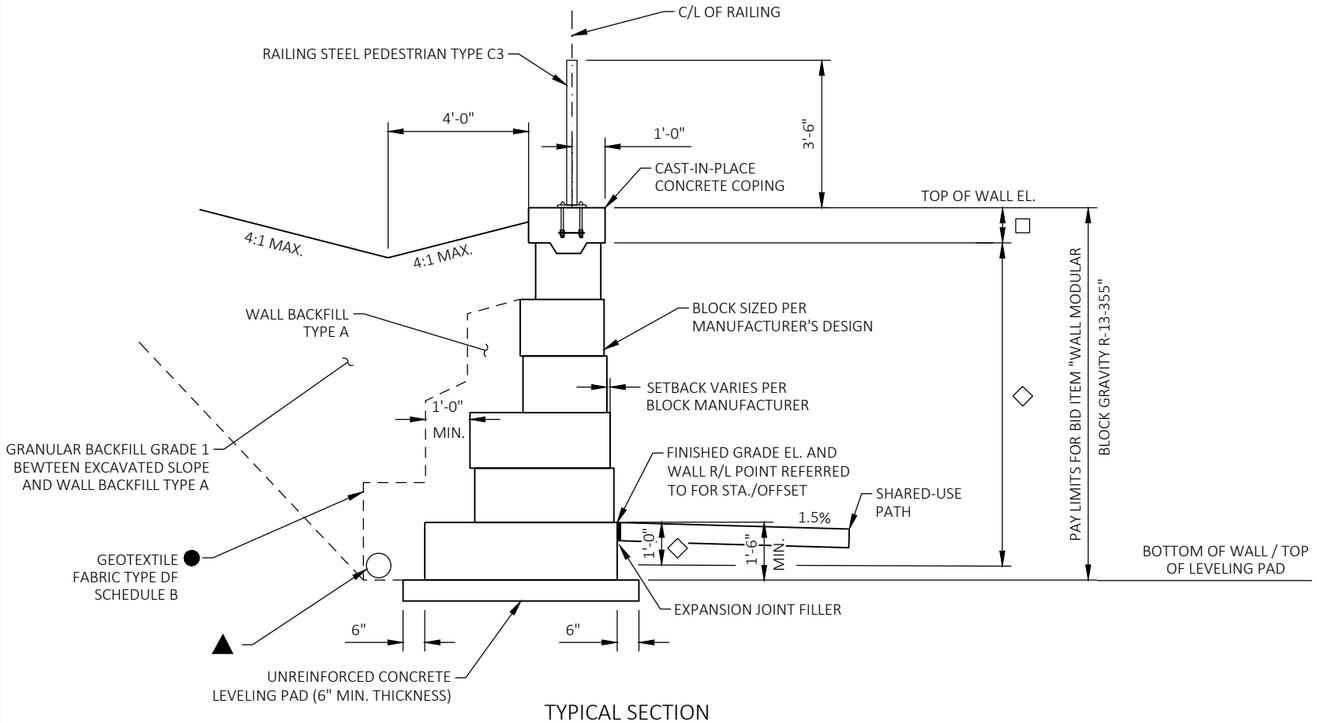

TYPICAL SECTION

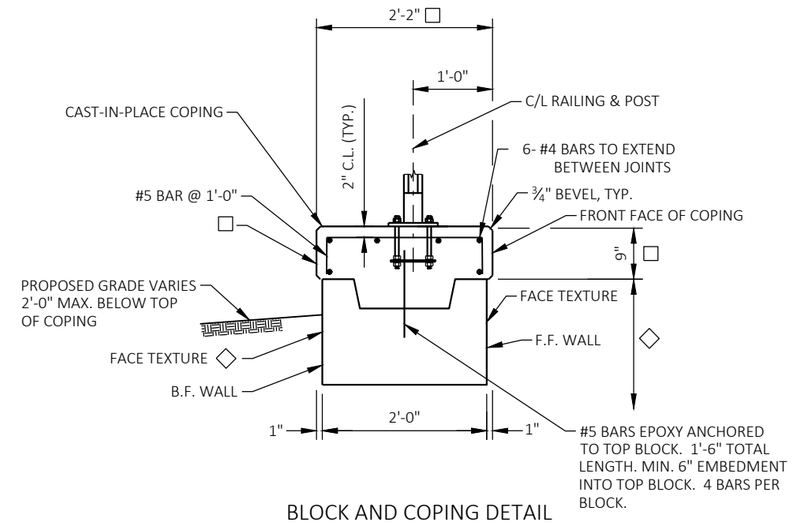

BLOCK AND COPING DETAIL

LEGEND

▲ PIPE UNDERDRAIN WRAPPED 6-INCH, SLOPE 0.5% MIN. TO SUITABLE DRAINAGE. ATTACH END CAP AT HIGH END OF PIPE UNDERDRAIN. CONNECT TO STORM SEWER.

● GEOTEXTILE FABRIC SHALL COMPLETELY SEPARATE WALL BACKFILL TYPE A FROM BACKFILL ON ALL SIDES.

□ APPLY CONCRETE STAINING TO ALL COPING FACES. COLOR SHALL BE FEDERAL COLOR NO. 26134.

◇ APPLY CONCRETE STAINING FROM TOP OF BLOCK TO 1'-0" BELOW FINISHED GRADE ELEVATION, FRONT AND BACK FACE OF WALL. COLOR SHALL BE FEDERAL COLOR NO. 33448.

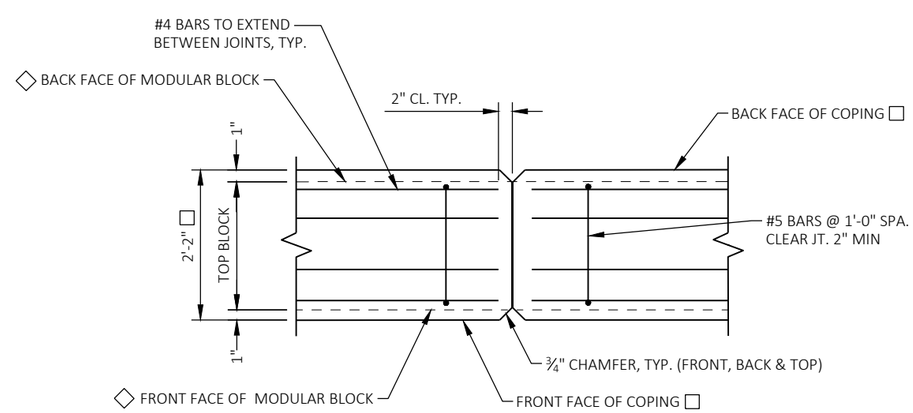

COPING CONTRACTION JOINT

DO NOT RUN BAR STEEL THRU JOINT
HORIZ. SPA. OF JOINT = 12'-0"

KL Engineering
[A] Better Experience
5400 King James Way
Suite 200
Madison, WI. 53719
Phone: (608) 663-1218
Phone: (800)-810-4012
http://klengineering.com
email@klengineering.com

CITY OF FITCHBURG

MODULAR BLOCK DETAILS
R-13-356

Project No:	19-3488
Date:	OCT 2019
Designed By:	CAH
Drafted By:	STD
Checked By:	CDH

Revisions:

SHEET NO.

3 OF 25

PLOT DATE : 10/17/2019 3:08 PM

PLOT BY : COLE HERNIKL

FILE NAME : G:\FITCHBRG\18013-000\CIVIL3D\SHEETSPLAN\STRUCTURES CAD\080504-GN.DWG

GEOMETRY TABLE
SOLDIER PILE WALL

REFERENCE / PILE NUMBER	WALL STA	OFFSET - SEE NOTE BELOW	TOP WALL EL	B.F. FINISHED GRADE	B.F. EXPOSED WALL HEIGHT (FT)	F.F. FINISHED GRADE	F.F. EXPOSED WALL HEIGHT (FT)	EXISTING GROUND LINE AT F.F. WALL	TOP OF PILE	TOP OF FOOTING	BOTTOM OF FOOTING	FOOTING LENGTH	SOLDIER PILE SECTION	SOLDIER PILE LENGTH	NO. OF STUDS
BEGIN WALL	30+93.12	--	897.59	896.18	1.41	890.76	6.83	894.64	--	--	--	--	--	--	--
1	30+95.38	1.86	897.59	896.38	1.21	890.85	6.74	894.71	895.88	888.35	876.88	11.47	W12x96	19.0	10
2	31+02.55	1.86	897.59	897.11	0.48	891.12	6.47	895.27	896.61	888.62	877.11	11.51	W12x96	19.5	10
STEP	31+06.58	--	899.09	897.60	1.49	891.30	7.79	895.65	--	--	--	--	--	--	--
3	31+09.72	1.86	899.09	897.84	1.25	891.38	7.71	895.85	897.34	888.88	877.34	11.54	W12x96	20.0	10
4	31+17.72	1.86	899.09	898.71	0.38	891.70	7.39	896.52	898.21	889.20	877.71	11.49	W12x96	20.5	10
STEP / E	31+20.04	--	900.59	899.02	1.57	891.84	8.75	896.79	--	--	--	--	--	--	--
5	31+23.97	1.86	900.59	899.09	1.50	891.98	8.61	897.07	898.59	889.48	878.09	11.39	W12x96	20.5	12
6	31+30.22	1.86	900.59	899.22	1.37	892.22	8.37	897.32	898.72	889.72	878.22	11.50	W12x96	20.5	10
7	31+36.47	1.86	900.59	899.33	1.26	892.46	8.13	897.54	898.83	889.96	878.33	11.63	W12x96	20.5	10
7A	31+44.47	1.86	900.59	899.48	1.11	892.79	7.80	897.88	898.98	890.29	878.98	11.31	W12x96	20.0	10
C	31+50.72	1.86	900.59	899.58	1.01	893.04	7.55	898.17	--	--	--	--	--	--	--
8	31+52.47	1.86	900.59	899.64	0.95	893.12	7.47	898.24	899.14	890.62	879.14	11.48	W12x96	20.0	10
9	31+60.47	1.86	900.59	899.78	0.81	893.45	7.14	898.61	899.28	890.95	879.28	11.67	W12x96	20.0	10
10	31+68.47	1.86	900.59	899.93	0.66	893.77	6.82	899.04	899.43	891.27	879.93	11.34	W12x96	19.5	10
11	31+76.47	1.86	900.59	900.18	0.41	894.10	6.49	899.47	899.68	891.60	880.18	11.42	W12x96	19.5	10
STEP /C	31+81.72	--	902.09	900.59	1.50	894.31	7.78	899.81	--	--	--	--	--	--	--
12	31+84.47	1.86	902.09	900.80	1.29	894.42	7.67	900.00	900.30	891.92	880.30	11.62	W12x96	20.0	10
13	31+92.47	1.86	902.09	901.38	0.71	894.74	7.35	900.57	900.88	892.24	880.88	11.36	W12x96	20.0	10
STEP	31+99.02	--	903.59	901.90	1.69	894.99	8.60	901.06	--	--	--	--	--	--	--
14	31+99.22	1.86	903.59	901.92	1.67	895.01	8.58	901.06	901.42	892.51	880.92	11.59	W12x96	20.5	10
15	32+05.97	1.86	903.59	902.42	1.17	895.27	8.32	901.48	901.92	892.77	881.42	11.35	W12x96	20.5	12
16	32+12.72	1.86	903.59	902.93	0.66	895.52	8.07	901.86	902.43	893.02	881.43	11.59	W12x96	21.0	12
STEP / E	32+16.31	--	905.09	903.22	1.87	895.66	9.43	902.15	--	--	--	--	--	--	--
17	32+20.72	1.89	905.09	903.55	1.54	895.82	9.27	902.46	903.05	893.32	882.05	11.27	W12x136	21.0	12
18	32+28.72	1.89	905.09	904.02	1.07	896.12	8.97	902.29	903.52	893.62	882.02	11.60	W12x136	21.5	12
19	32+35.72	1.89	905.09	904.41	0.68	896.39	8.70	902.42	903.91	893.89	882.41	11.48	W12x136	21.5	12
20	32+43.72	1.89	905.09	904.85	0.24	896.68	8.41	902.73	904.35	894.18	882.85	11.33	W12x136	21.5	12
STEP / C	32+46.10	--	906.59	905.00	1.59	896.78	9.81	902.85	--	--	--	--	--	--	--
21	32+50.71	1.89	906.59	905.24	1.35	896.94	9.65	903.04	904.74	894.44	883.24	11.20	W12x136	21.5	12
22	32+57.71	1.89	906.59	905.61	0.98	897.21	9.38	903.35	905.11	894.71	883.11	11.60	W12x136	22.0	12
23	32+64.71	1.89	906.59	905.99	0.60	897.47	9.12	903.66	905.49	894.97	883.49	11.48	W12x136	22.0	12
24	32+71.71	1.89	906.59	906.26	0.33	897.73	8.86	903.95	905.76	895.23	883.76	11.47	W12x136	22.0	12
STEP / E	32+75.89	--	908.09	906.40	1.69	897.89	10.20	904.01	--	--	--	--	--	--	--
25	32+78.65	1.89	908.09	906.50	1.59	898.00	10.09	904.05	906.00	895.50	884.00	11.50	W12x136	22.0	12
26	32+85.65	1.89	908.09	906.75	1.34	898.26	9.83	904.24	906.25	895.76	884.25	11.51	W12x136	22.0	12
27	32+92.65	1.89	908.09	906.99	1.10	898.52	9.57	904.45	906.49	896.02	884.49	11.53	W12x136	22.0	12
28	32+99.65	1.89	908.09	907.22	0.87	898.79	9.30	904.65	906.72	896.29	884.72	11.57	W12x136	22.0	12
C	33+03.00	--	908.09	907.32	0.77	898.91	9.18	904.75	--	--	--	--	--	--	--
29	33+07.65	1.89	908.09	907.47	0.62	899.09	9.00	904.89	906.97	896.59	885.47	11.12	W12x136	21.5	12
30	33+15.65	1.89	908.09	907.72	0.37	899.39	8.70	905.12	907.22	896.89	885.72	11.17	W12x136	21.5	12
31	33+23.65	1.89	908.09	907.98	0.11	899.69	8.40	905.36	907.48	897.19	885.98	11.21	W12x136	21.5	12
STEP	33+23.94	--	909.59	907.98	1.61	899.70	9.89	905.37	--	--	--	--	--	--	--
32	33+31.65	1.89	909.59	908.22	1.37	899.99	9.60	905.59	907.72	897.49	886.22	11.27	W12x136	21.5	12
C	33+35.00	--	909.59	908.32	1.27	900.12	9.47	905.68	--	--	--	--	--	--	--
33	33+39.65	1.89	909.59	908.47	1.12	900.29	9.30	905.81	907.97	897.79	886.47	11.32	W12x136	21.5	12
34	33+47.65	1.89	909.59	908.71	0.88	900.59	9.00	906.04	908.21	898.09	886.71	11.38	W12x136	21.5	12
35	33+55.59	1.89	909.59	908.95	0.64	900.89	8.70	906.26	908.45	898.39	886.95	11.44	W12x136	21.5	12
36	33+63.59	1.89	909.59	909.18	0.41	901.19	8.40	906.49	908.68	898.69	887.18	11.51	W12x136	21.5	12
STEP / E	33+67.57	--	911.09	909.29	1.80	901.34	9.75	906.60	--	--	--	--	--	--	--
37	33+71.59	1.89	911.09	909.41	1.68	901.49	9.60	906.72	908.91	898.99	887.41	11.58	W12x136	21.5	12
38	33+79.59	1.89	911.09	909.64	1.45	901.79	9.30	906.93	909.14	899.29	887.64	11.65	W12x136	21.5	12
39	33+87.59	1.89	911.09	909.85	1.24	902.09	9.00	907.38	909.35	899.59	888.35	11.24	W12x136	21.0	12
40	33+95.59	1.89	911.09	910.05	1.04	902.39	8.70	907.86	909.55	899.89	888.55	11.34	W12x136	21.0	12

KL Engineering
[A] Better Experience
5400 King James Way
Suite 200
Madison, WI. 53719
Phone: (608) 663-1218
Phone: (800)-810-4012
http://klengineering.com
email@klengineering.com

CITY OF FITCHBURG

SOLDIER PILE GEOMETRY TABLE - 1
R-13-356

Project No: 19-3488
Date: OCT 2019
Designed By: CDH
Drafted By: STD
Checked By: CAH

Revisions:

SHEET NO.
4 OF 25

PLOT DATE : 10/17/2019 3:09 PM
PLOT BY : COLE HERNIKL
FILE NAME : G:\FITCHBRG\18013-000\CIVIL3D\SHEETSPLAN\STRUCTURES CAD\080504-GN.DWG

GEOMETRY TABLE
SOLDIER PILE WALL

REFERENCE / PILE NUMBER	WALL STA	OFFSET - SEE NOTE BELOW	TOP WALL EL	B.F. FINISHED GRADE	B.F. EXPOSED WALL HEIGHT (FT)	F.F. FINISHED GRADE	F.F. EXPOSED WALL HEIGHT (FT)	EXISTING GROUND LINE AT F.F. WALL	TOP OF PILE	TOP OF FOOTING	BOTTOM OF FOOTING	FOOTING LENGTH	SOLDIER PILE SECTION	SOLDIER PILE LENGTH	NO. OF STUDS
C	33+99.88	1.89	911.09	910.17	0.92	902.56	8.53	907.86	--	--	--	--	--	--	--
41	34+03.59	1.89	911.09	910.26	0.83	902.70	8.39	907.87	909.76	900.20	888.76	11.44	W12x136	21.0	12
42	34+11.59	1.86	911.09	910.47	0.62	903.00	8.09	907.92	909.97	900.50	888.97	11.53	W12x96	21.0	12
43	34+19.59	1.86	911.09	910.67	0.42	903.30	7.79	908.06	910.17	900.80	889.17	11.63	W12x96	21.0	12
44	34+27.52	1.86	911.09	910.86	0.23	903.60	7.49	908.34	910.36	901.10	889.86	11.24	W12x96	20.5	12
STEP / C	34+33.49	--	912.59	911.01	1.58	903.82	8.77	908.55	--	--	--	--	--	--	--
45	34+35.52	1.86	912.59	911.11	1.48	903.90	8.69	908.64	910.61	901.40	890.11	11.29	W12x96	20.5	12
46	34+42.02	1.86	912.59	911.49	1.10	904.15	8.44	908.93	910.99	901.65	890.49	11.16	W12x96	20.5	12
47	34+48.52	1.86	912.59	911.87	0.72	904.39	8.20	909.21	911.37	901.89	890.37	11.52	W12x96	21.0	12
48	34+55.02	1.89	912.59	912.26	0.33	904.64	7.95	909.50	911.76	902.14	890.76	11.38	W12x136	21.0	12
STEP / E	34+58.47	--	914.09	912.46	1.63	904.77	9.32	909.65	--	--	--	--	--	--	--
49	34+62.97	1.89	914.09	912.72	1.37	904.95	9.14	909.86	912.22	902.45	891.22	11.23	W12x136	21.0	12
50	34+70.97	1.89	914.09	913.12	0.97	905.28	8.81	910.26	912.62	902.78	891.62	11.16	W12x136	21.0	12
51	34+78.97	1.89	914.09	913.52	0.57	905.60	8.49	910.66	913.02	903.10	892.02	11.08	W12x136	21.0	12
52	34+86.97	1.89	914.09	913.92	0.17	905.93	8.16	911.04	913.42	903.43	892.42	11.01	W12x136	21.0	12
C	34+90.00	1.89	914.09	914.08	0.01	906.06	8.03	911.17	--	--	--	--	--	--	--
53	34+94.97	1.89	914.09	914.07	0.02	906.27	7.82	911.31	913.57	903.77	892.57	11.20	W12x136	21.0	12
54	35+02.97	1.86	914.09	914.03	0.06	906.62	7.47	911.54	913.53	904.12	892.53	11.59	W12x96	21.0	12
55	35+10.97	1.86	914.09	913.99	0.10	906.98	7.11	911.60	913.49	904.48	892.99	11.49	W12x96	20.5	10
56	35+17.44	1.86	914.09	913.96	0.13	907.26	6.83	911.65	913.46	904.76	893.46	11.30	W12x96	20.0	10
E	35+20.00	1.86	914.09	913.89	0.20	907.38	6.71	911.67	--	--	--	--	--	--	--
57	35+23.94	1.86	914.09	913.74	0.35	907.56	6.53	911.70	913.24	905.06	893.74	11.32	W12x96	19.5	10
58	35+30.44	1.86	914.09	913.48	0.61	907.87	6.22	911.75	912.98	905.37	893.98	11.39	W12x96	19.0	10
59	35+38.43	1.86	914.09	913.16	0.93	908.24	5.85	911.69	912.66	905.74	894.16	11.58	W12x96	18.5	8
60	35+46.43	1.86	914.09	912.85	1.24	908.61	5.48	911.27	912.35	906.11	894.85	11.26	W12x96	17.5	8
61	35+52.51	1.86	914.09	912.67	1.42	908.90	5.19	910.99	912.17	906.40	895.17	11.23	W12x96	17.00	6
END WALL	35+54.07	--	914.09	912.59	1.50	908.99	5.10	911.00	--	--	--	--	--	--	--

NOTES:
ALL WALL STATIONING ARE BASED OFF OF THE FRONT FACE OF THE WALL ALIGNMENT.
ALL OFFSETS ARE THE DISTANCE FROM THE FRONT FACE WALL ALIGNMENT TO THE CENTER OF THE PILE AT THE FRONT FACE FINISHED GRADE ELEVATION.
C = WALL CONTRACTION JOINT
E = WALL EXPANSION JOINT

KL Engineering
[A] Better Experience
5400 King James Way
Suite 200
Madison, WI. 53719
Phone: (608) 663-1218
Phone: (800)-810-4012
http://klengineering.com
email@klengineering.com

CITY OF FITCHBURG
SOLDIER PILE GEOMETRY TABLE - 2
R-13-356

Project No: 19-3488
Date: OCT 2019
Designed By: CDH
Drafted By: STD
Checked By: CAH

Revisions:

SHEET NO.
5 OF 25

PLOT DATE : 7/28/2019 10:44 AM
PLOT BY : SCOTT DEMEUSE
FILE NAME : G:\FITCHBRG\18013-000\CIVIL3D\SHEETSPLAN\STRUCTURES CAD\080506-PPGN.DWG

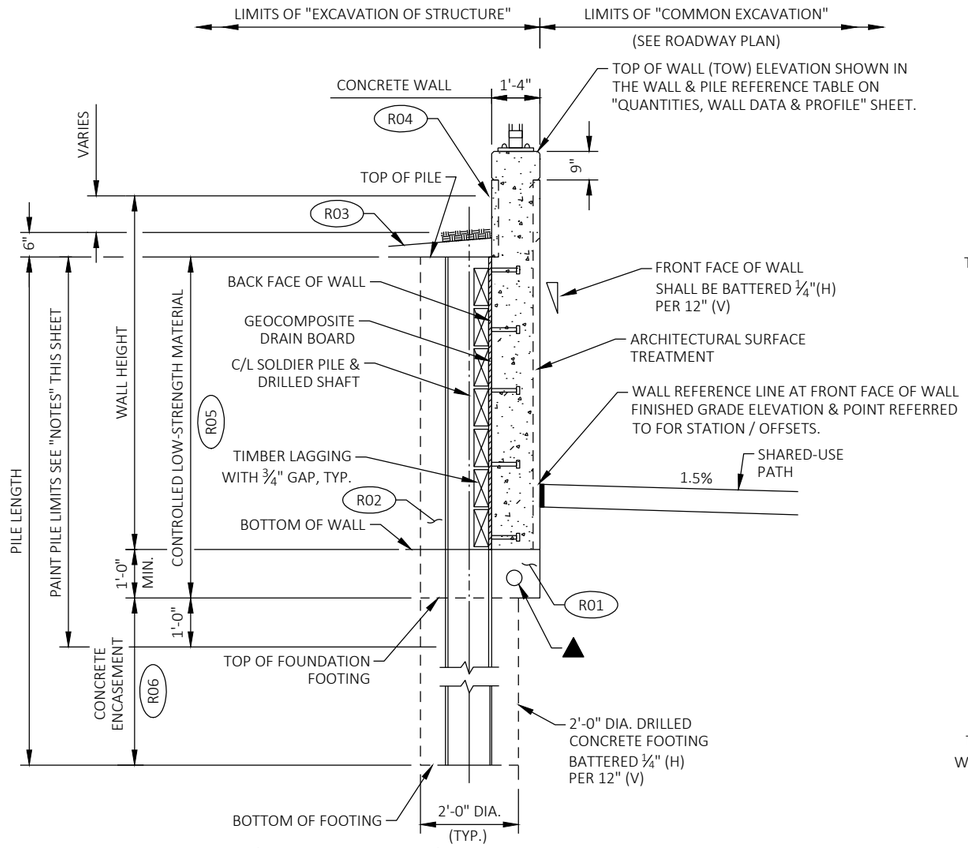

SOLDIER (POST & PANEL) PILE WALL TYPICAL SECTION

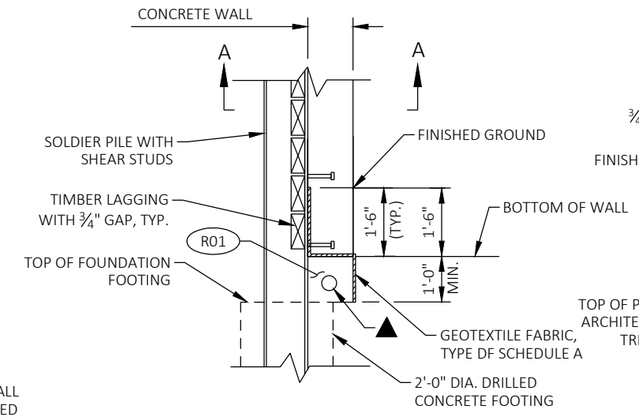

DETAIL A

(AT SOLDIER PILES)

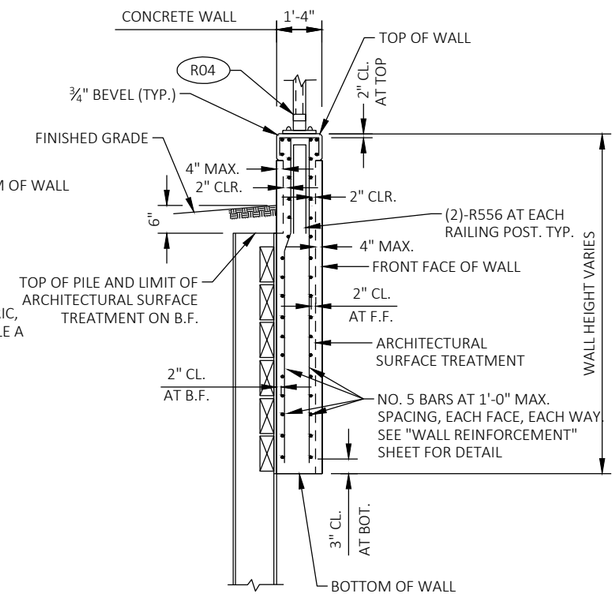

TYPICAL REINFORCEMENT LAYOUT

F.F. - FRONT FACE
B.F. - BACK FACE

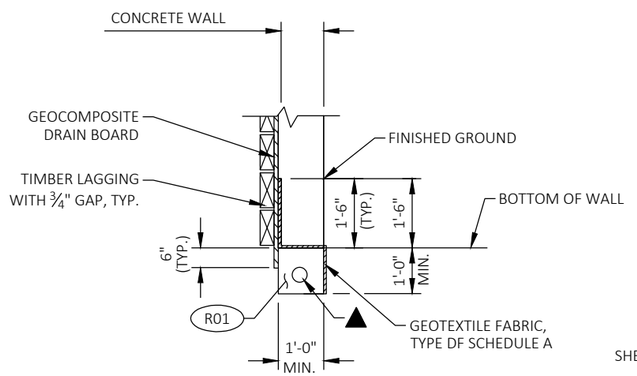

DETAIL B

(BETWEEN SOLDIER PILES)

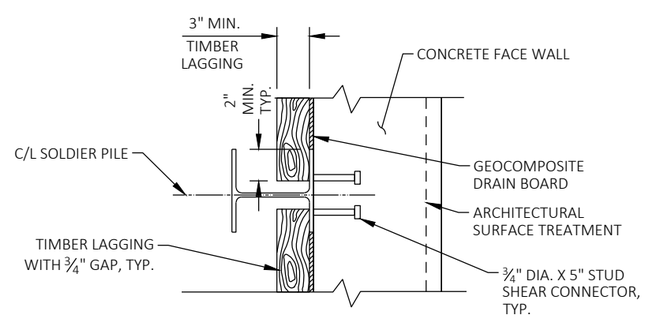

SECTION A-A

(REINFORCEMENT NOT SHOWN FOR CLARITY)

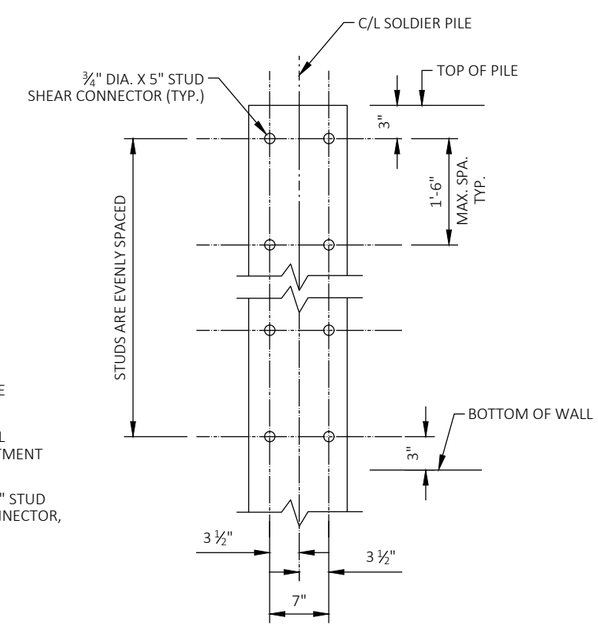

STUD SHEAR CONNECTION LAYOUT

NOTES

ARCHITECTURAL SURFACE TREATMENT TEXTURE SHALL MATCH REDI-ROCK LEDGESTONE APPEARANCE IN PATTERN AND RELIEF AS APPROVED BY THE ENGINEER.

PAINT PILE FROM TOP OF PILE TO 1'-0" BELOW TOP OF FOOTING WITH A PRIME COAT OF ORGANIC ZINC-RICH PAINT. PREPARE THE SURFACE AND APPLY THE PAINT AS SPECIFIED IN SECTION 517 OF THE STANDARD SPECIFICATIONS. PAINTING OF PILE IS INCLUDED WITH BID ITEM "STRUCTURAL STEEL HS".

FOOTING SHOULD BE DRILLED AND PILES SHOULD BE SET WITH A ¼-INCH HORIZONTAL TO 1-FOOT VERTICAL BATTER.

FILL VOIDS BEHIND LAGGING WITH #1 OR #2 COARSE AGGREGATE. INCLUDED WITH BID ITEMS "EXCAVATION FOR STRUCTURES RETAINING WALL R-13-356".

LEGEND

▲ PIPE UNDERDRAIN WRAPPED 6-INCH, SLOPE 0.5% MIN. TO SUITABLE DRAINAGE. ATTACH END CAP AT HIGH END OF PIPE UNDERDRAIN. SEE DETAIL THIS SHEET. CONNECT TO STORM SEWER WHERE FEASIBLE.

R01 DRAINAGE AGGREGATE MINIMUM OF 1'-0" X 1'-0" BASE AGGREGATE OPEN GRADED IN GEOTEXTILE FABRIC, TYPE DF SCHEDULE A. BASE AGGREGATE IS INCLUDED IN THE PIPE UNDERDRAIN. ATTACH RODENT SHEILD AT END OF PIPE UNDERDRAIN. SEE "QUANTITIES, WALL DATA & PROFILE" SHEET.

R02 FILL AUGERED HOLE AROUND SOLDIER PIPE AND ABOVE FOOTING WITH CONTROLLED LOW-STRENGTH MATERIAL (CLSM). INCLUDED WITH THE BID ITEM "EXCAVATION FOR STRUCTURES RETAINING WALLS R-13-356".

R03 SLOPE BEHIND WALL VARIES. SEE ROADWAY CROSS SECTIONS.

R04 RAILING STEEL PEDESTRIAN TYPE C3. SEE "STEEL RAILING DETAILS" SHEETS.

R05 COST OF DRILLING AND CONTROLLING LOW STRENGTH MATERIAL IN DRILLED HOLES SHALL BE INCLUDED IN THE BID ITEM "EXCAVATION FOR STRUCTURES RETAINING WALLS R-13-356.

R06 CONCRETE ENCASEMENT LIMITS INCLUDES THE PAY LIMITS FOR BOTH THE BID ITEM "FOUNDATION DRILLING 24-INCH DIAMETER" AND THE BID ITEM "CONCRETE MASONRY RETAINING WALLS".

KL Engineering
[A] Better Experience
5400 King James Way
Suite 200
Madison, WI. 53719
Phone: (608) 663-1218
Phone: (800)-810-4012
http://klengineering.com
email@klengineering.com

CITY OF FITCHBURG

SOLDIER PILE WALL DETAILS - 1
R-13-356

Project No:	19-3488
Date:	OCT 2019
Designed By:	CDH
Drafted By:	STD
Checked By:	CDH

Revisions:

SHEET NO.

6 OF 25

PLOT DATE : 7/28/2019 10:46 AM
PLOT BY : SCOTT DEMEUSE
FILE NAME : G:\FITCHBRG\180113-000\CIVIL3D\SHEETSPLAN\STRUCTURES CAD\080507-PPGN.DWG

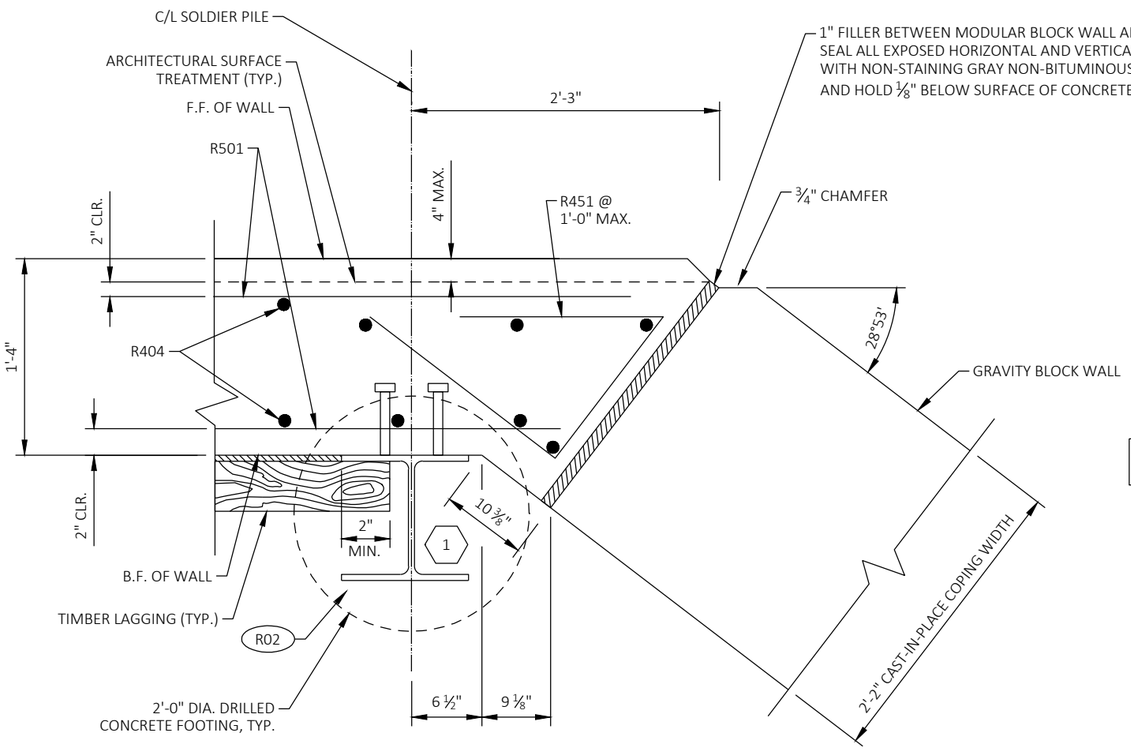

BEGIN SOLDIER PILE WALL DETAIL

F.F. - FRONT FACE
B.F. - BACK FACE

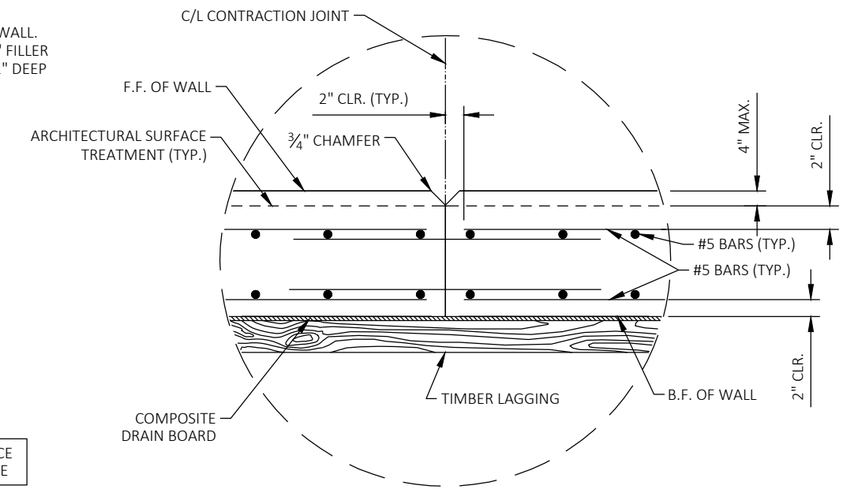

CONTRACTION JOINT DETAIL

(SEE WALL LAYOUT SHEETS FOR LOCATION)

NOTES

R02 FILL AUGERED HOLE AROUND SOLDIER PIPE AND ABOVE FOOTING WITH CONTROLLED LOW-STRENGTH MATERIAL (CLSM). INCLUDED WITH THE BID ITEM "EXCAVATION FOR STRUCTURES RETAINING WALLS R-13-356".

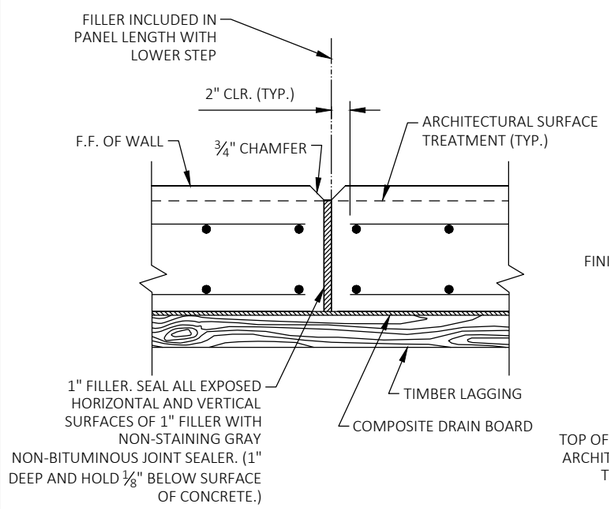

EXPANSION JOINT DETAIL

(SEE WALL LAYOUT SHEETS FOR LOCATION)

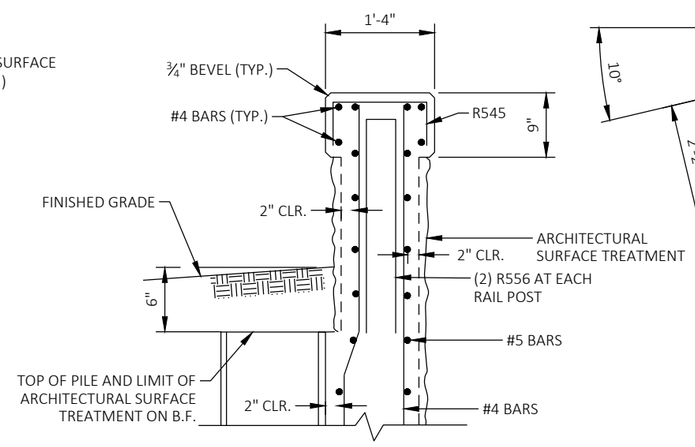

TOP OF WALL DETAIL

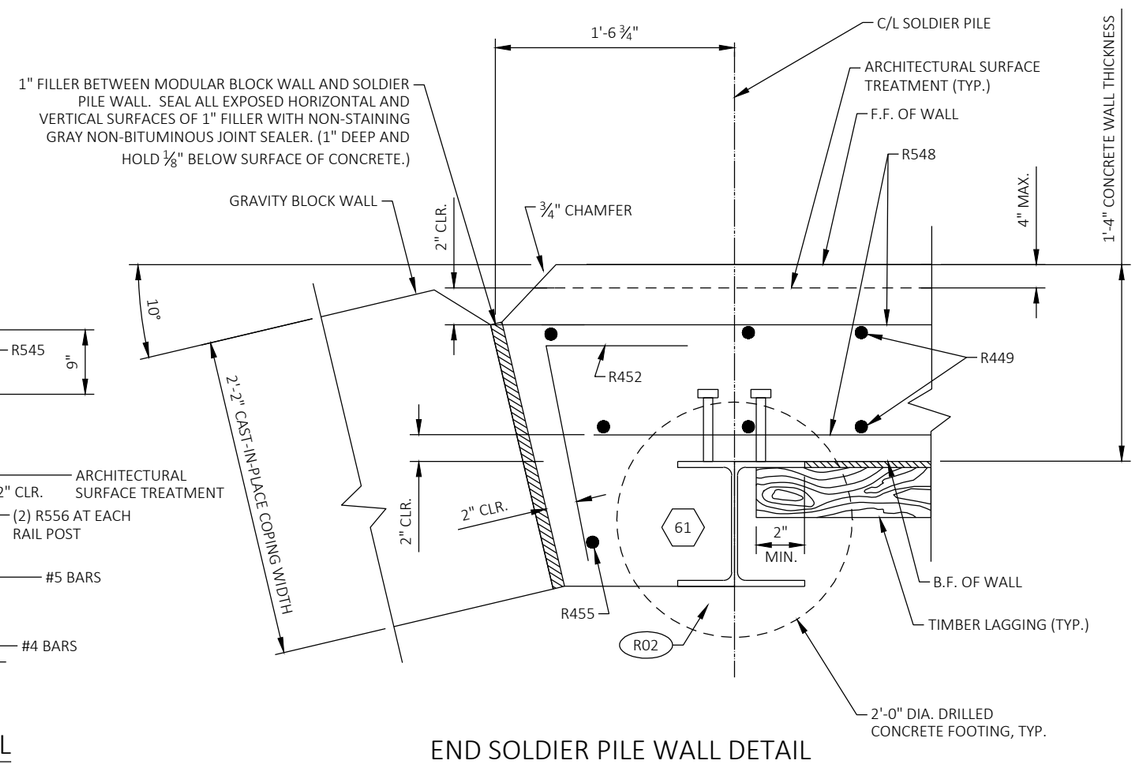

END SOLDIER PILE WALL DETAIL

KL Engineering
[A] Better Experience
5400 King James Way
Suite 200
Madison, WI. 53719
Phone: (608) 663-1218
Phone: (800)-810-4012
http://klengineering.com
email@klengineering.com

CITY OF FITCHBURG

SOLDIER PILE WALL DETAILS - 2
R-13-356

Project No:	19-3488
Date:	OCT 2019
Designed By:	CDH
Drafted By:	STD
Checked By:	CDH

Revisions:

SHEET NO.

7 OF 25

PLOT DATE : 7/29/2019 7:43 AM
PLOT BY : COLE HERNIKL
FILE NAME : G:\FITCHBRG\18013-000\CIVIL3D\SHEETSPLAN\STRUCTURES CAD\080508-WD-1.DWG

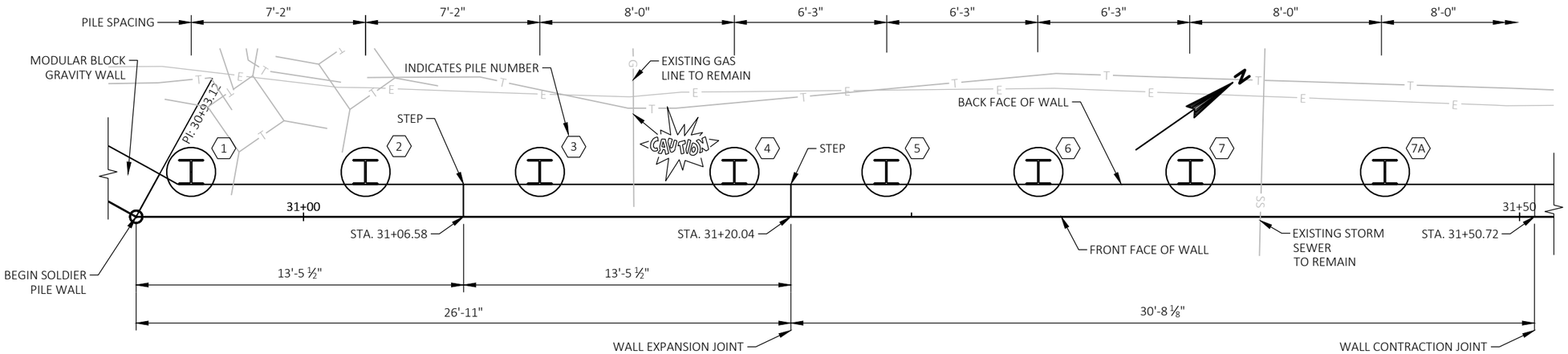

WALL SEGMENT 1 PLAN VIEW

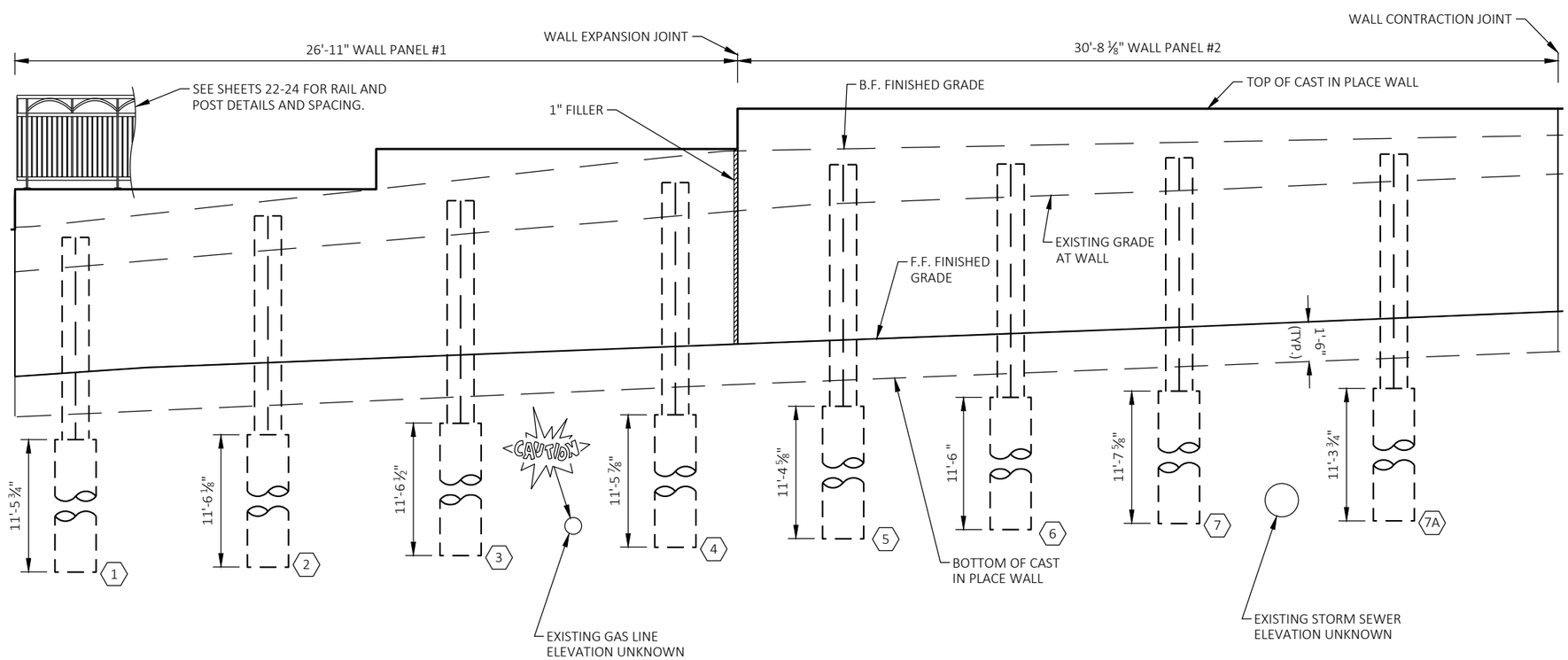

WALL SEGMENT 1 ELEVATION VIEW

KL Engineering
[A] Better Experience
5400 King James Way
Suite 200
Madison, WI. 53719
Phone: (608) 663-1218
Phone: (800)-810-4012
http://klengineering.com
email@klengineering.com

CITY OF FITCHBURG

SOLDIER PILE WALL LAYOUT-1

R-13-356

Project No:	19-3488
Date:	OCT 2019
Designed By:	CDH
Drafted By:	STD
Checked By:	CAH

Revisions:

SHEET NO.

8 OF 25

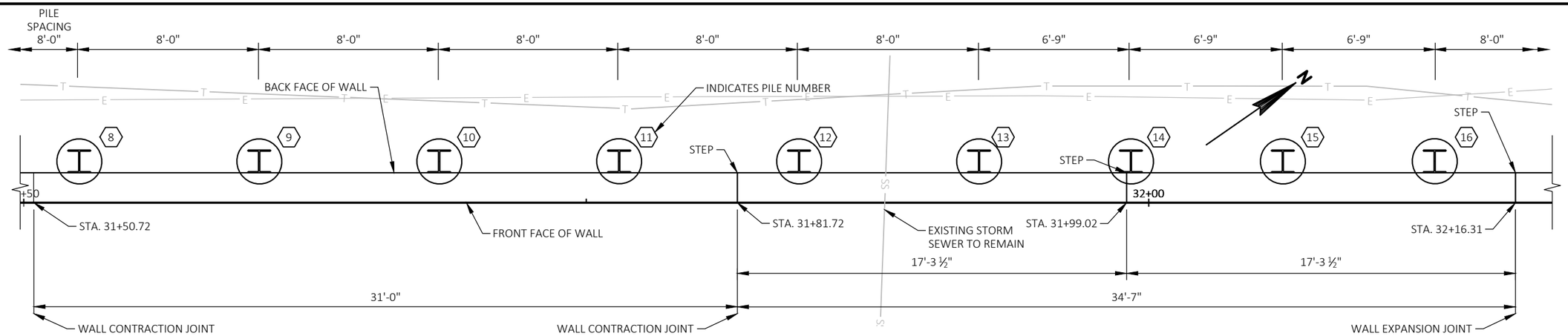

WALL SEGMENT 2 PLAN VIEW

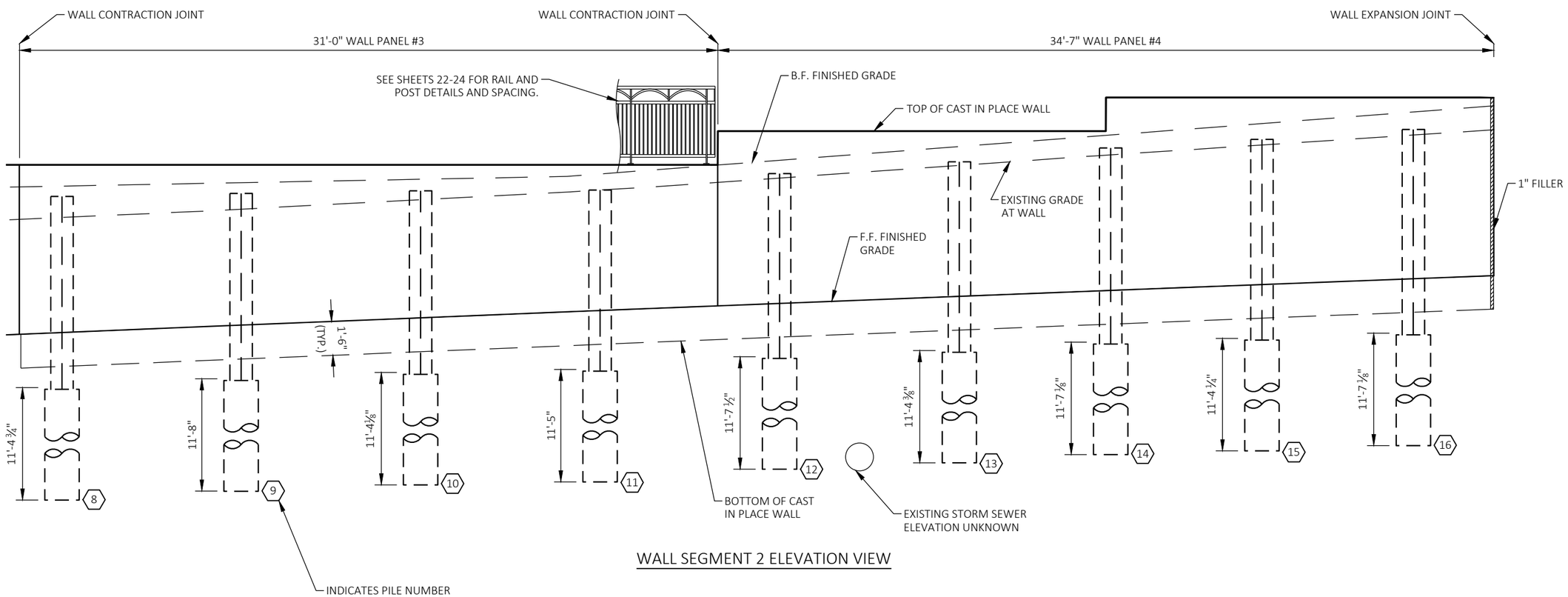

WALL SEGMENT 2 ELEVATION VIEW

KL Engineering
[A] Better Experience
5400 King James Way
Suite 200
Madison, WI. 53719
Phone: (608) 663-1218
Phone: (800)-810-4012
http://klengineering.com
email@klengineering.com

CITY OF FITCHBURG

SOLDIER PILE WALL LAYOUT-2
R-13-356

Project No:	19-3488
Date:	OCT 2019
Designed By:	CDH
Drafted By:	STD
Checked By:	CAH

Revisions:

SHEET NO.

9 OF 25

PLOT DATE : 7/29/2019 7:45 AM
PLOT BY : COLE HERNIKL
FILE NAME : G:\FITCHBRG\18013-000\CIVIL3D\SHEETSPLAN\STRUCTURES CAD\080509-WD-2.DWG

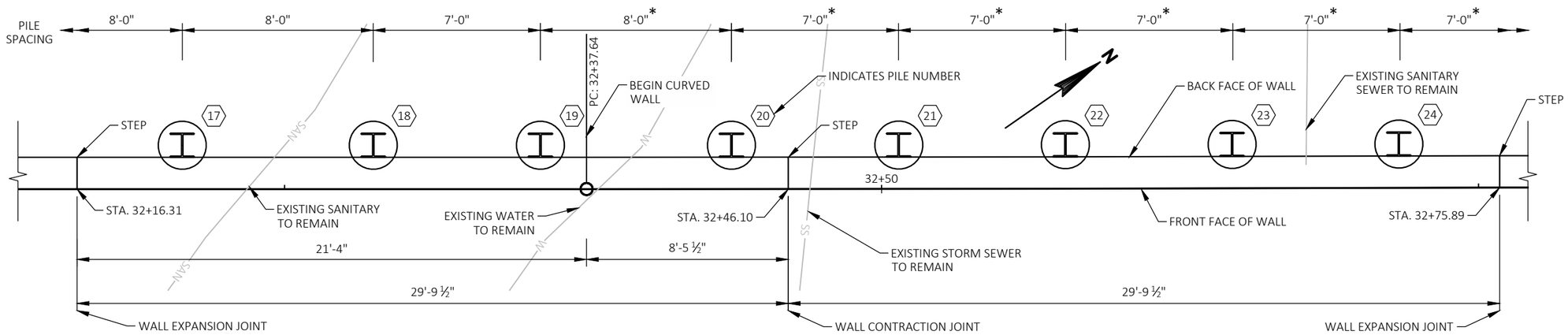

WALL SEGMENT 3 PLAN VIEW

* DENOTES LENGTH ALONG CHORD

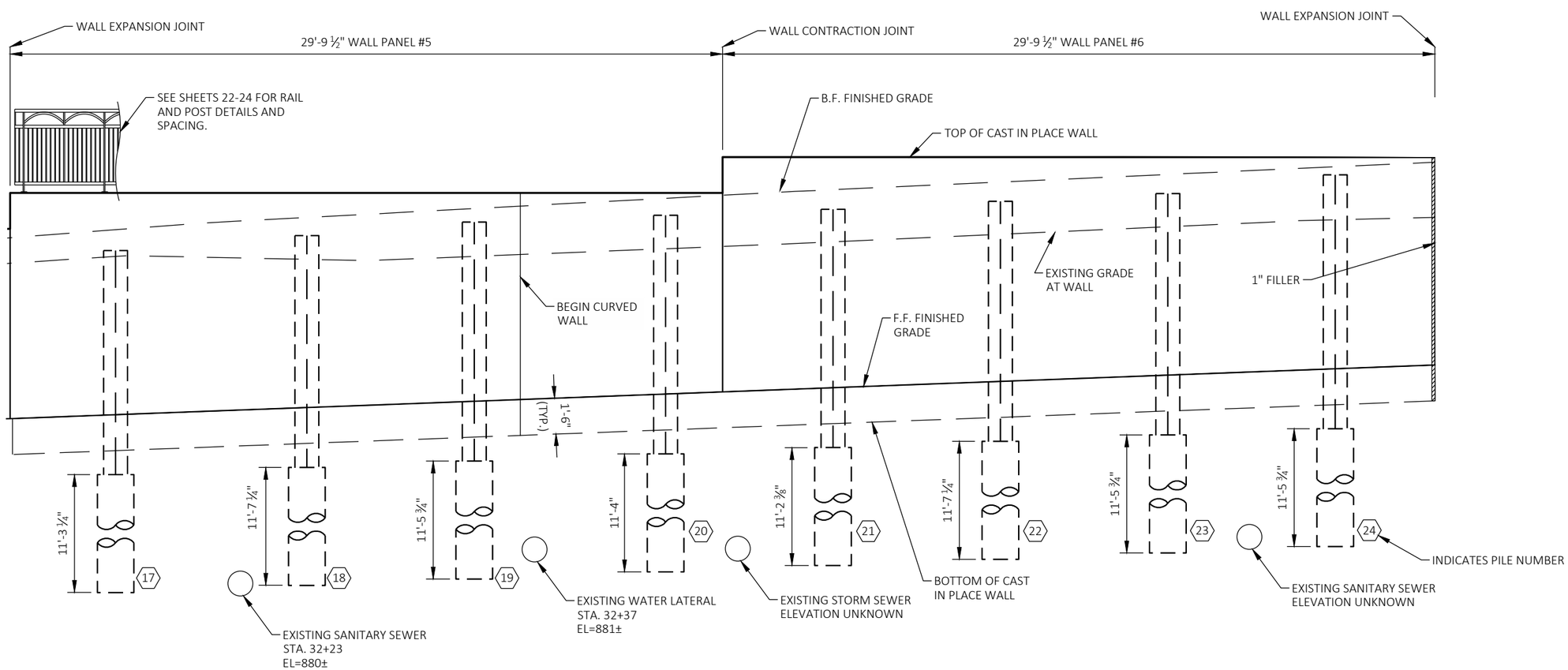

WALL SEGMENT 3 ELEVATION VIEW

KL Engineering
[A] Better Experience
5400 King James Way
Suite 200
Madison, WI. 53719
Phone: (608) 663-1218
Phone: (800)-810-4012
http://klengineering.com
email@klengineering.com

CITY OF FITCHBURG

SOLDIER PILE WALL LAYOUT-3
R-13-356

Project No:	19-3488
Date:	OCT 2019
Designed By:	CDH
Drafted By:	STD
Checked By:	CAH

Revisions:

SHEET NO.

10 OF 25

PLOT DATE : 7/29/2019 7:48 AM
PLOT BY : COLE HERNIKL
FILE NAME : G:\FITCHBRG\18013-000\CIVIL3D\SHEETSPLAN\STRUCTURES CAD\080510-WD-3.DWG

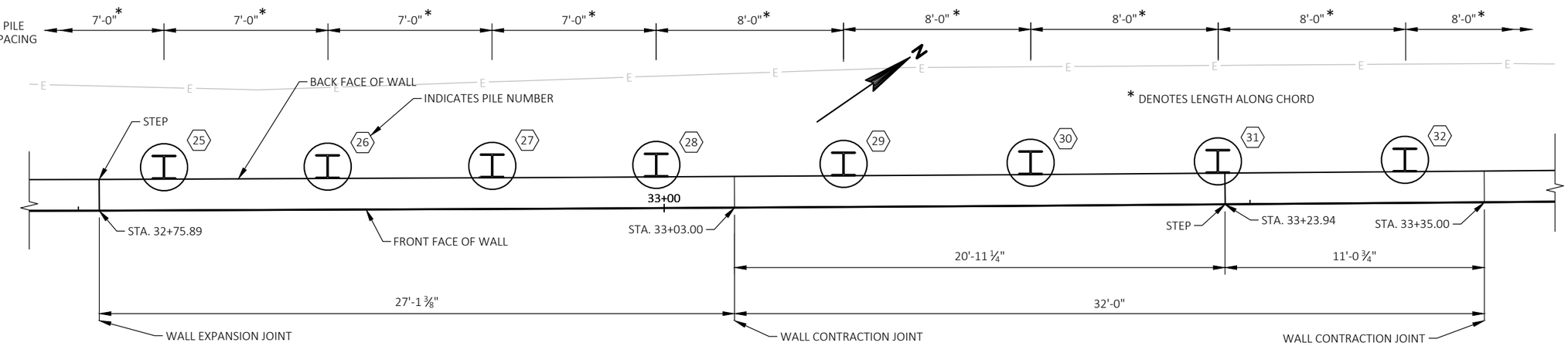

WALL SEGMENT 4 PLAN VIEW

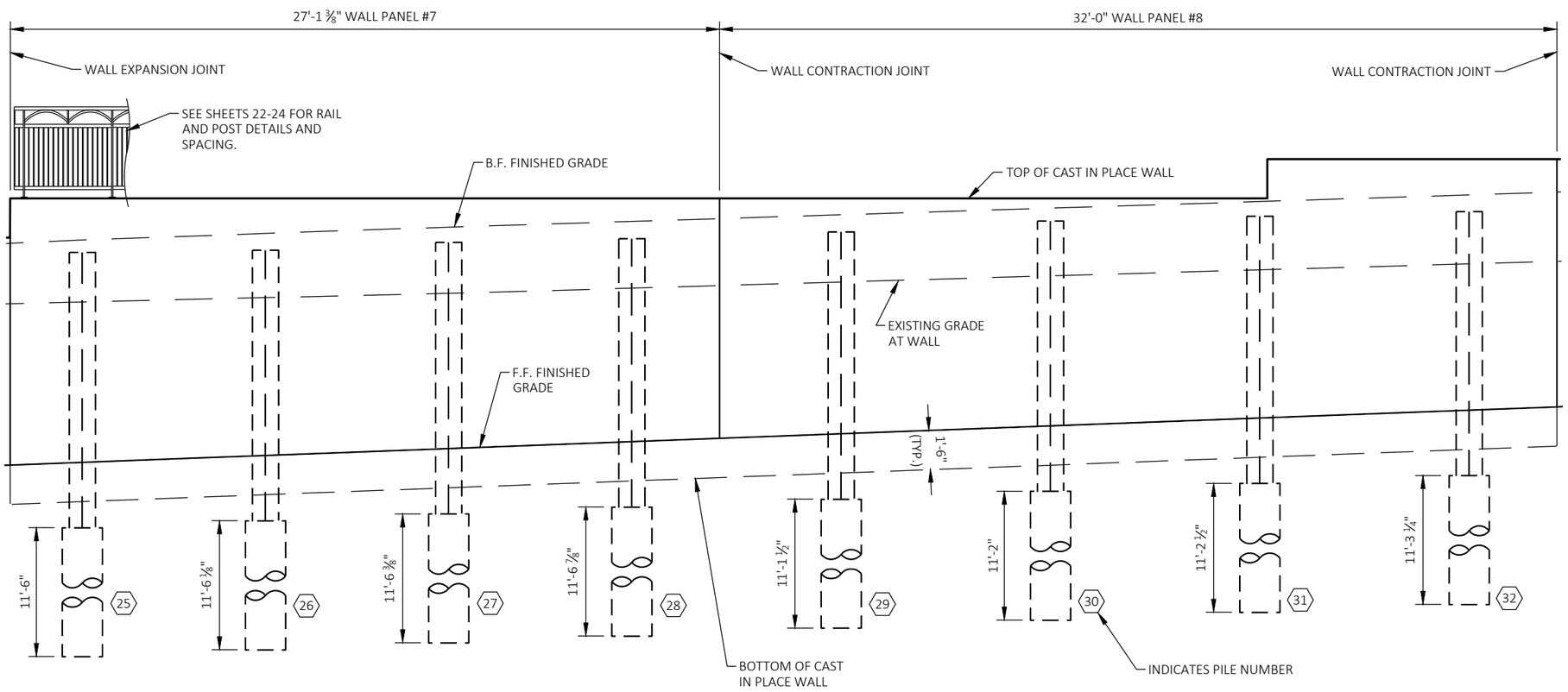

WALL SEGMENT 4 ELEVATION VIEW

KL Engineering
[A] Better Experience
5400 King James Way
Suite 200
Madison, WI. 53719
Phone: (608) 663-1218
Phone: (800)-810-4012
http://klengineering.com
email@klengineering.com

CITY OF FITCHBURG

SOLDIER PILE WALL LAYOUT-4
R-13-356

Project No:	19-3488
Date:	OCT 2019
Designed By:	CDH
Drafted By:	STD
Checked By:	CAH

Revisions:

SHEET NO.

11 OF 25

PLOT DATE : 7/29/2019 7:51 AM
PLOT BY : COLE HERNIKL
FILE NAME : G:\FITCHBRG\18013-000\CIVIL3D\SHEETSPLAN\STRUCTURES CAD\080511-WD-4.DWG

PLOT DATE : 7/29/2019 7:53 AM
PLOT BY : COLE HERNIKL
FILE NAME : G:\FITCHBRG\18013-000\CIVIL3D\SHEETSPLAN\STRUCTURES CAD\080512-WD-5.DWG

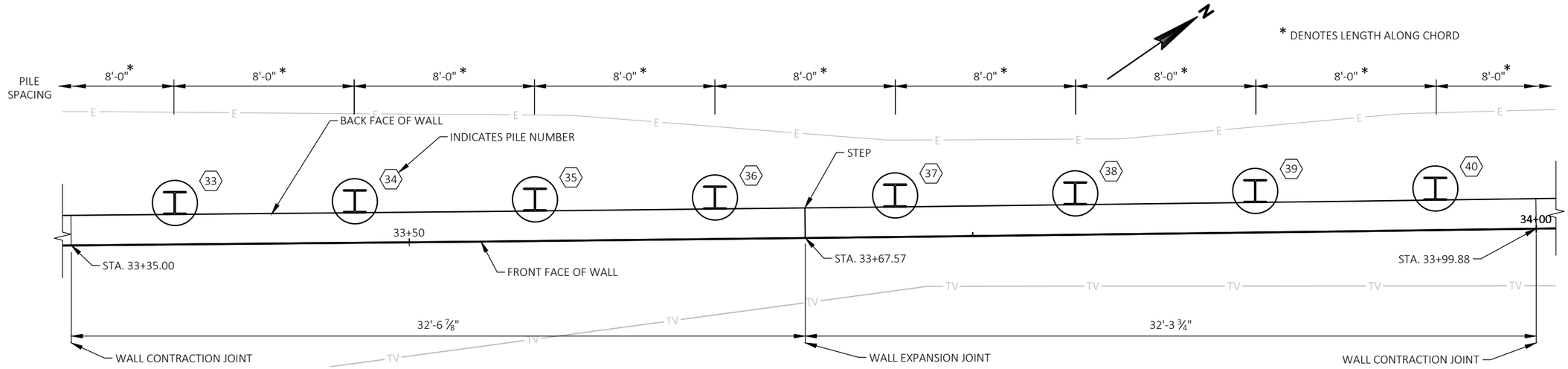

WALL SEGMENT 5 PLAN VIEW

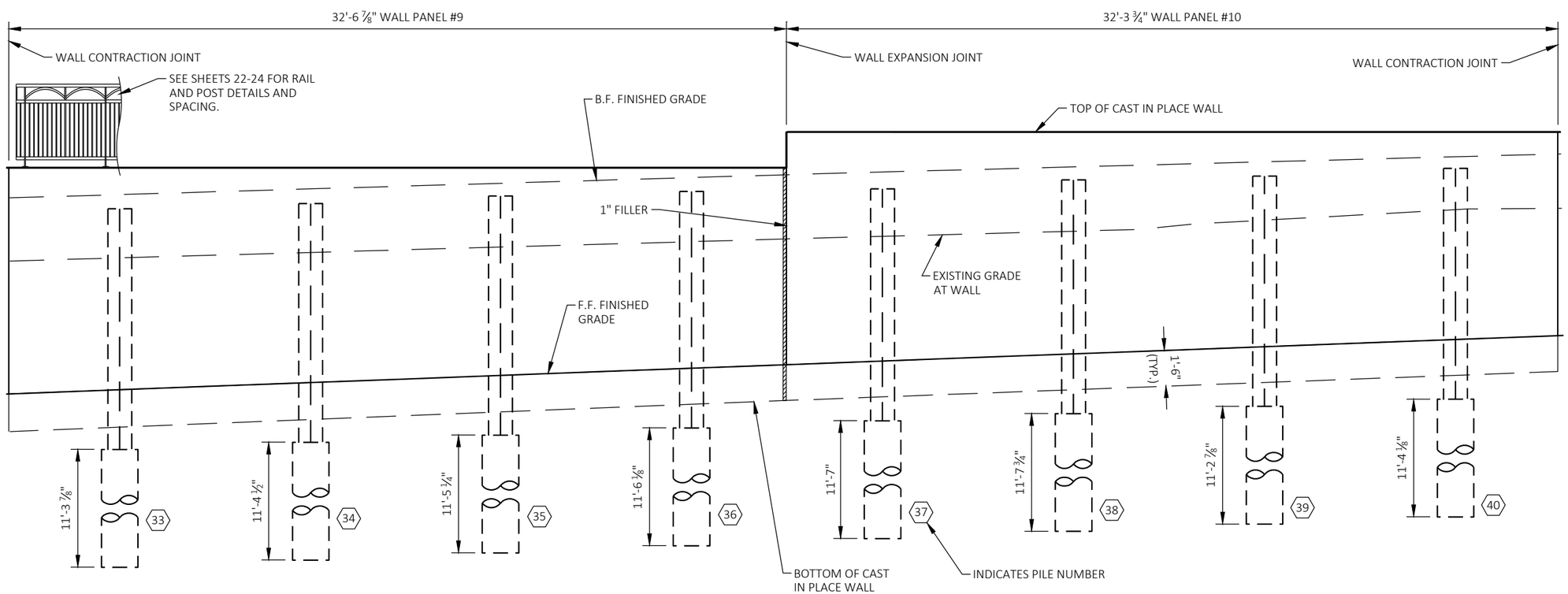

WALL SEGMENT 5 ELEVATION VIEW

KL Engineering
[A] Better Experience
5400 King James Way
Suite 200
Madison, WI. 53719
Phone: (608) 663-1218
Phone: (800)-810-4012
http://klengineering.com
email@klengineering.com

CITY OF FITCHBURG

SOLDIER PILE WALL LAYOUT-5
R-13-356

Project No:	19-3488
Date:	OCT 2019
Designed By:	CDH
Drafted By:	STD
Checked By:	CAH

Revisions:

SHEET NO.

12 OF 25

PLOT DATE : 7/29/2019 8:06 AM
PLOT BY : COLE HERNIKL
FILE NAME : G:\FITCHBRG\18013-000\CIVIL3D\SHEETSPLAN\STRUCTURES CAD\080513-WD-6.DWG

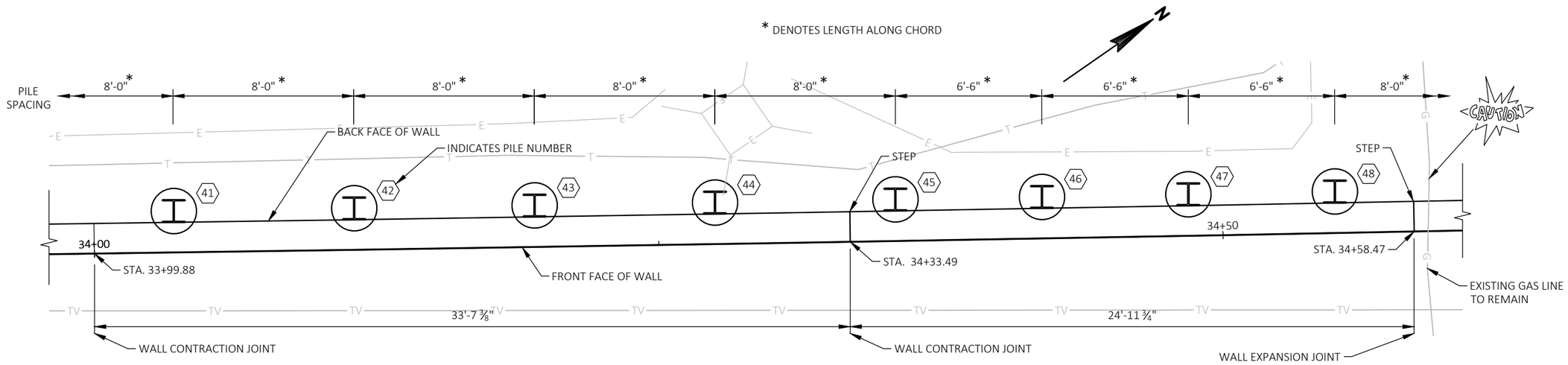

WALL SEGMENT 6 PLAN VIEW

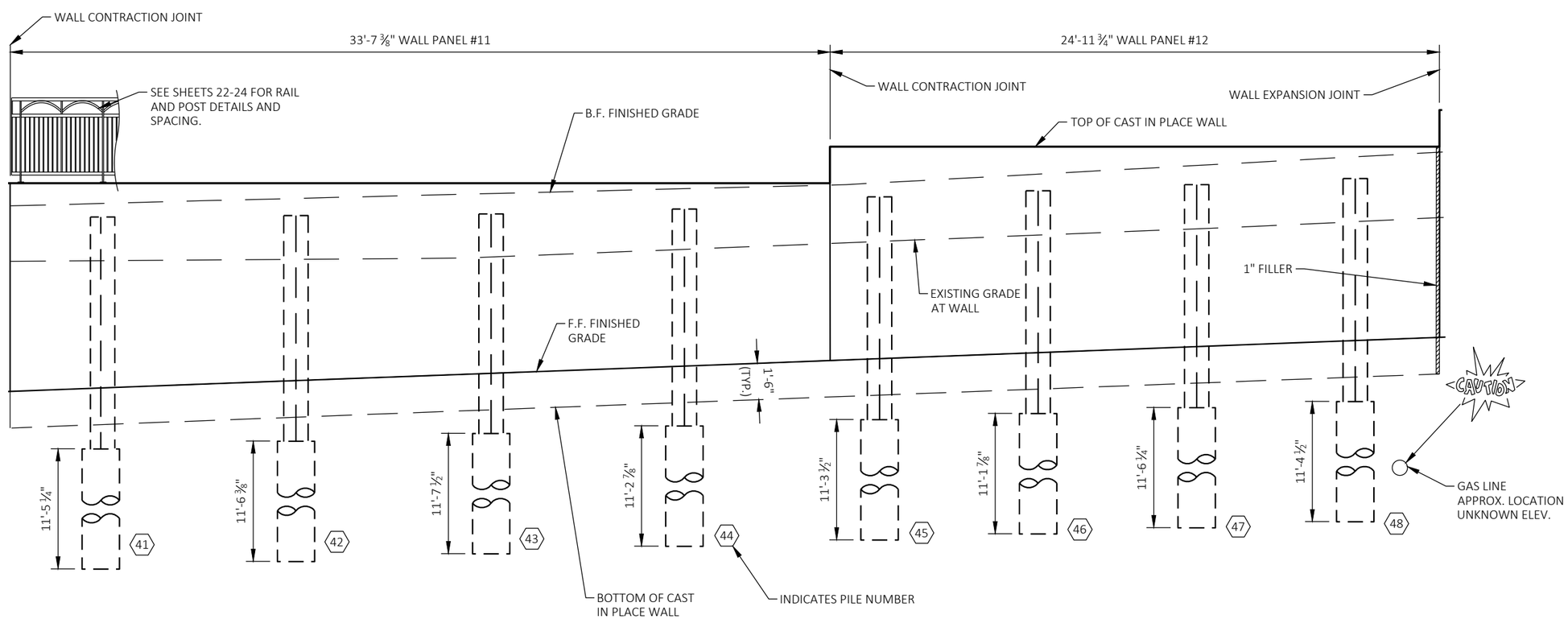

WALL SEGMENT 6 ELEVATION VIEW

KL Engineering
[A] Better Experience
5400 King James Way
Suite 200
Madison, WI. 53719
Phone: (608) 663-1218
Phone: (800)-810-4012
http://klengineering.com
email@klengineering.com

CITY OF FITCHBURG

SOLDIER PILE WALL LAYOUT-6
R-13-356

Project No:	19-3488
Date:	OCT 2019
Designed By:	CDH
Drafted By:	STD
Checked By:	CAH

Revisions:

SHEET NO.

13 OF 25

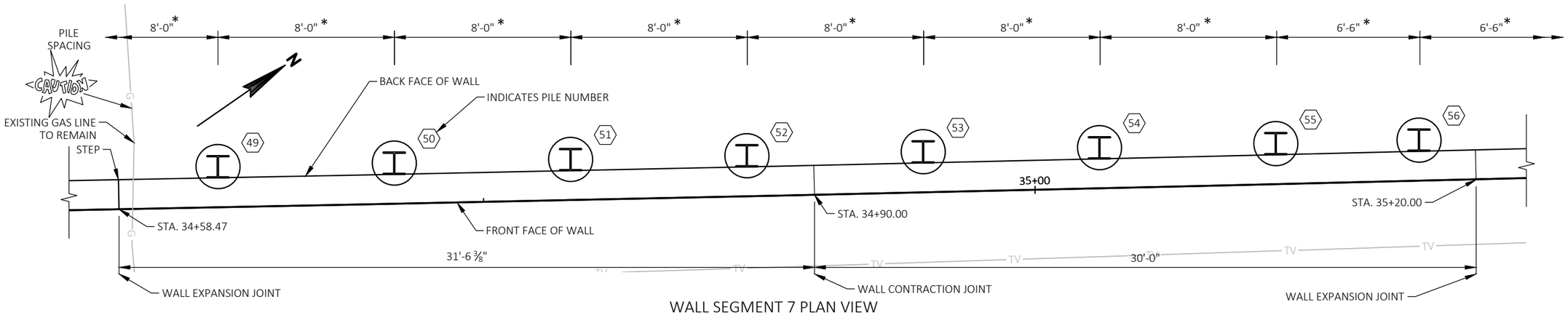

WALL SEGMENT 7 PLAN VIEW

* DENOTES LENGTH ALONG CHORD

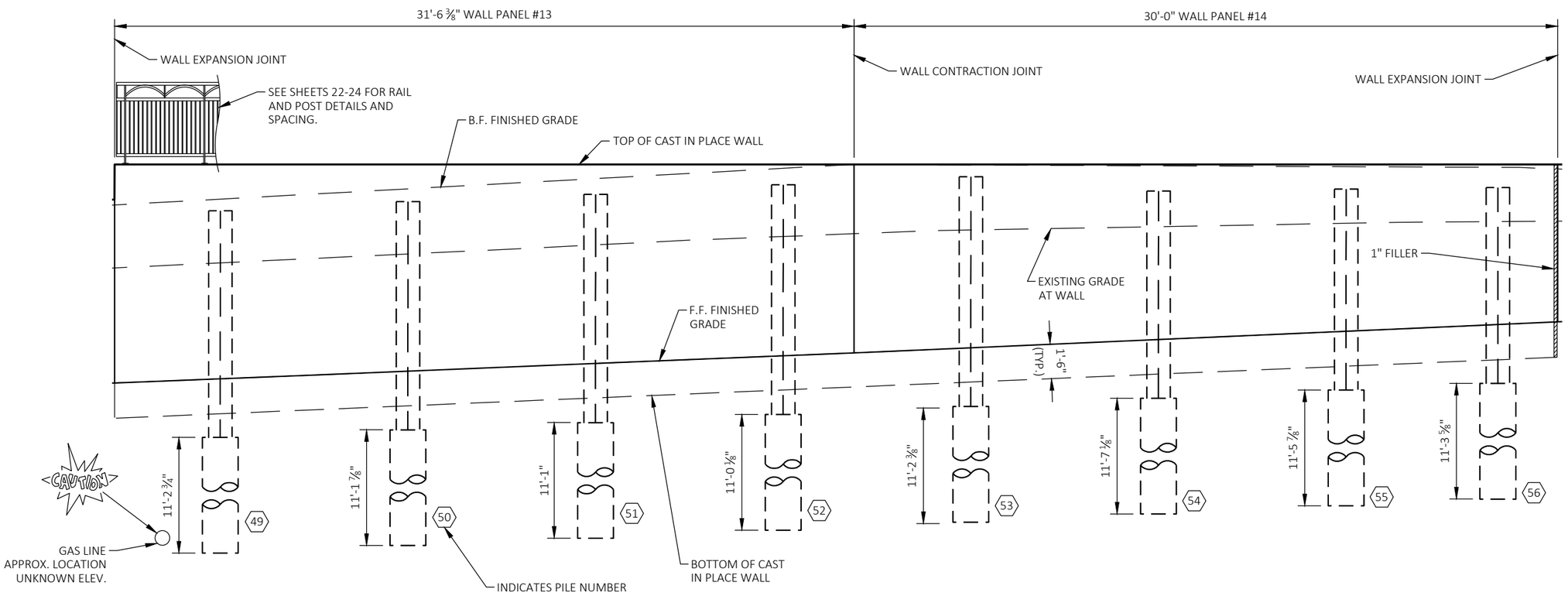

WALL SEGMENT 7 ELEVATION VIEW

KL Engineering
[A] Better Experience
5400 King James Way
Suite 200
Madison, WI. 53719
Phone: (608) 663-1218
Phone: (800)-810-4012
http://klengineering.com
email@klengineering.com

CITY OF FITCHBURG

SOLDIER PILE WALL LAYOUT-7
R-13-356

Project No:	19-3488
Date:	OCT 2019
Designed By:	CDH
Drafted By:	STD
Checked By:	CAH

Revisions:

SHEET NO.

14 OF 25

PLOT DATE : 7/29/2019 8:08 AM
PLOT BY : COLE HERNIKL
FILE NAME : G:\FITCHBRG\18013-000\CIVIL3D\SHEETSPLAN\STRUCTURES CAD\080514-WD-7.DWG

PLOT DATE : 7/29/2019 8:10 AM
PLOT BY : COLE HERNIKL
FILE NAME : G:\FITCHBRG\18013-000\CIVIL3D\SHEETSPLAN\STRUCTURES CAD\080515-WD-8.DWG

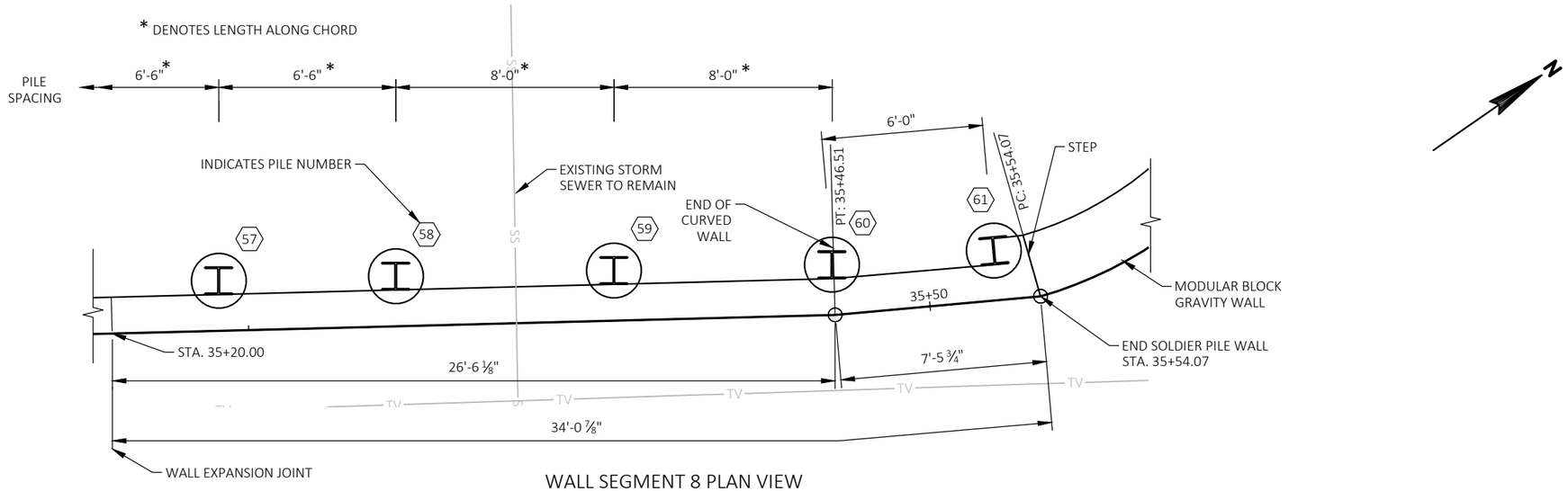

WALL SEGMENT 8 PLAN VIEW

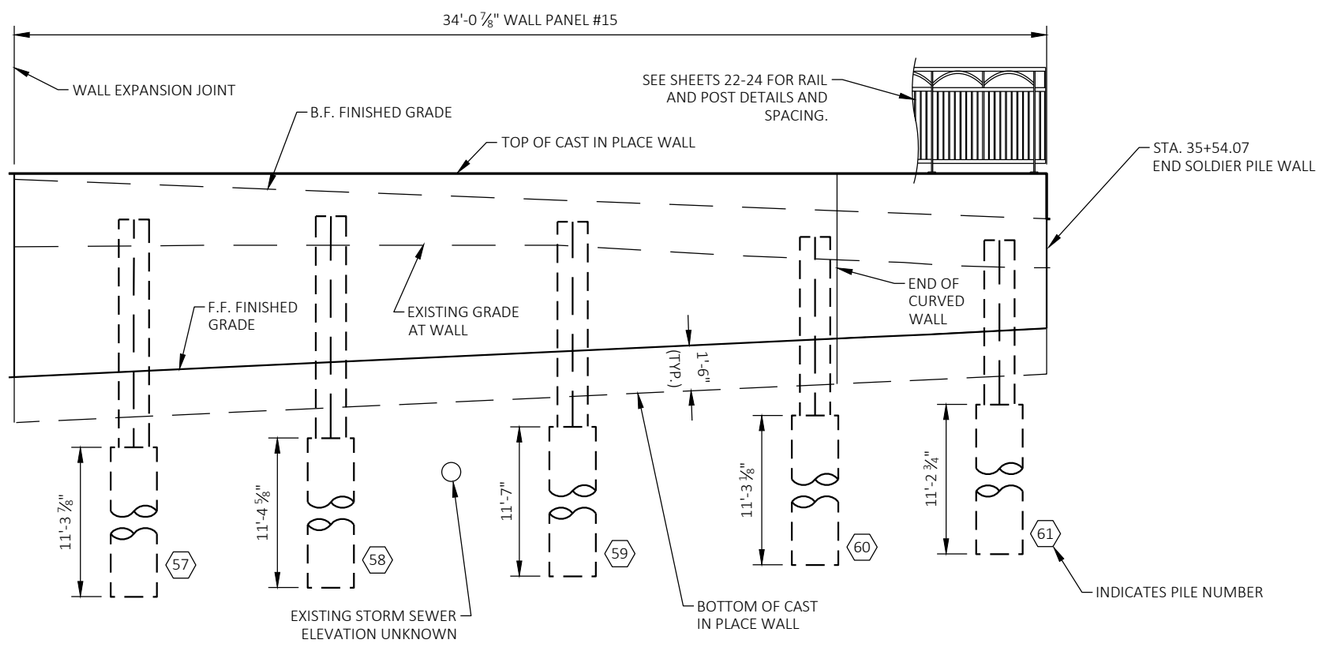

WALL SEGMENT 8 ELEVATION VIEW

KL Engineering
[A] Better Experience
5400 King James Way
Suite 200
Madison, WI. 53719
Phone: (608) 663-1218
Phone: (800)-810-4012
http://klengineering.com
email@klengineering.com

CITY OF FITCHBURG

SOLDIER PILE WALL LAYOUT-8
R-13-356

Project No:	19-3488
Date:	OCT 2019
Designed By:	CDH
Drafted By:	STD
Checked By:	CAH

Revisions:

SHEET NO.

15 OF 25

PLOT DATE : 7/28/2019 10:50 AM
PLOT BY : SCOTT DEMEUSE
FILE NAME : G:\FITCHBRG\18013-000\CIVIL3D\SHEETSPLAN\STRUCTURES CAD\080516-W-REF_1.DWG

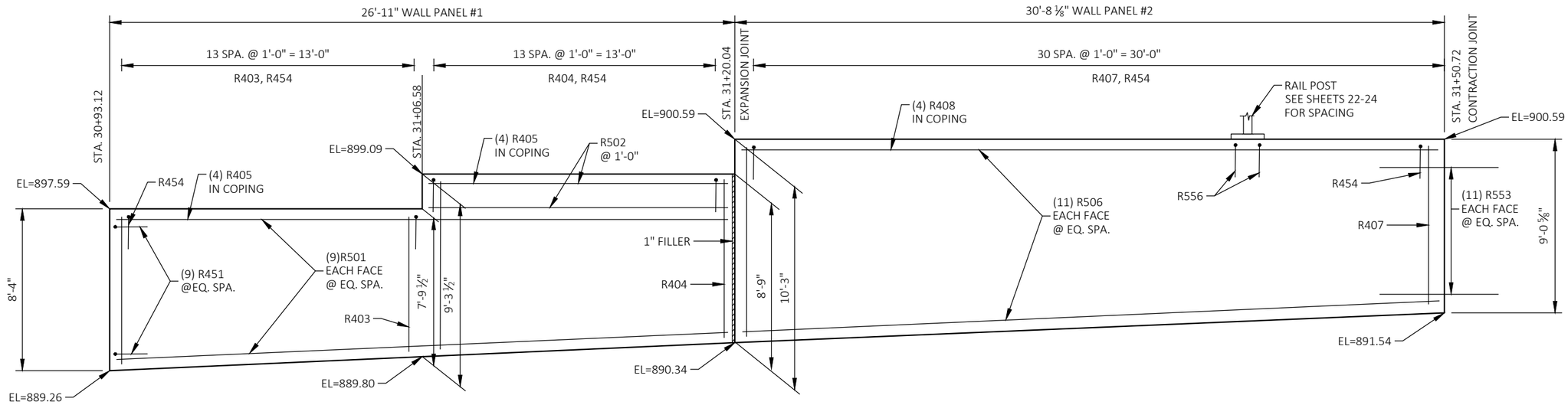

WALL SEGMENT 1

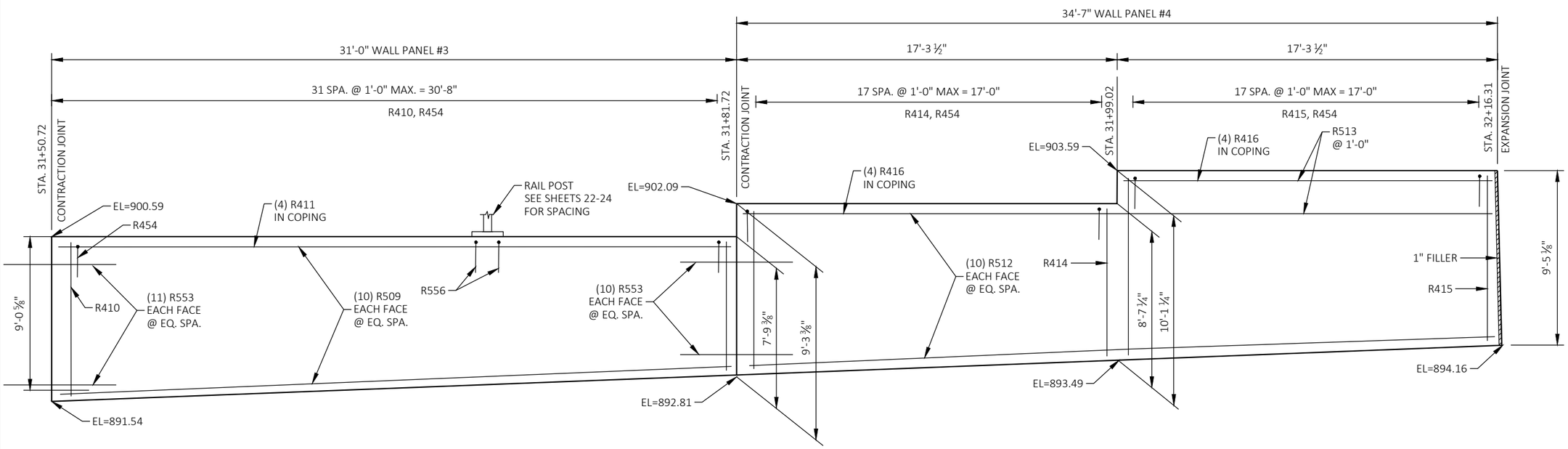

WALL SEGMENT 2

KL Engineering
[A] Better Experience
5400 King James Way
Suite 200
Madison, WI. 53719
Phone: (608) 663-1218
Phone: (800)-810-4012
http://klengineering.com
email@klengineering.com

CITY OF FITCHBURG

WALL REINFORCEMENT - 1
R-13-356

Project No:	19-3488
Date:	OCT 2019
Designed By:	CDH
Drafted By:	STD
Checked By:	CAH

Revisions:

SHEET NO.

16 OF 25

PLOT DATE : 7/28/2019 10:54 AM
PLOT BY : SCOTT DEMEUSE
FILE NAME : G:\FITCHBRG\180113-000\CIVIL3D\SHEETSPLAN\STRUCTURES CAD\080517-W.REF_2.DWG

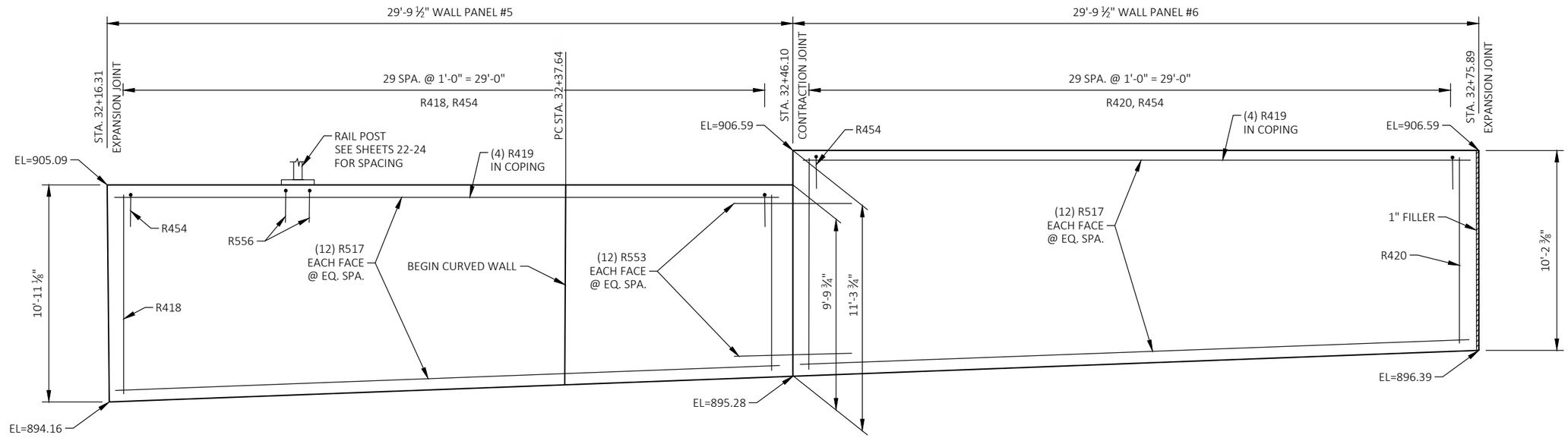

WALL SEGMENT 3

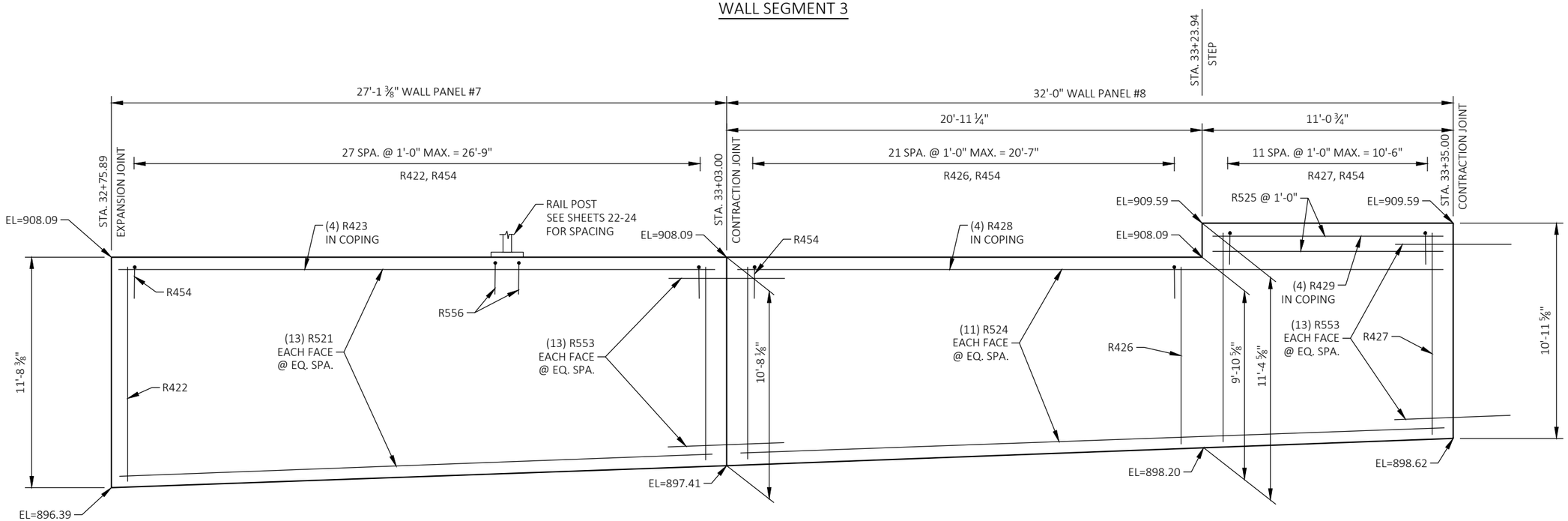

WALL SEGMENT 4

KL Engineering
[A] Better Experience
5400 King James Way
Suite 200
Madison, WI. 53719
Phone: (608) 663-1218
Phone: (800)-810-4012
http://klengineering.com
email@klengineering.com

CITY OF FITCHBURG

WALL REINFORCEMENT - 2
R-13-356

Project No:	19-3488
Date:	OCT 2019
Designed By:	CDH
Drafted By:	STD
Checked By:	CAH

Revisions:

SHEET NO.

17 OF 25

PLOT DATE : 7/28/2019 10:56 AM
PLOT BY : SCOTT DEMEUSE
FILE NAME : G:\FITCHBRG\18013-000\CIVIL3D\SHEETSPLAN\STRUCTURES CAD\080518-W.REF_3.DWG

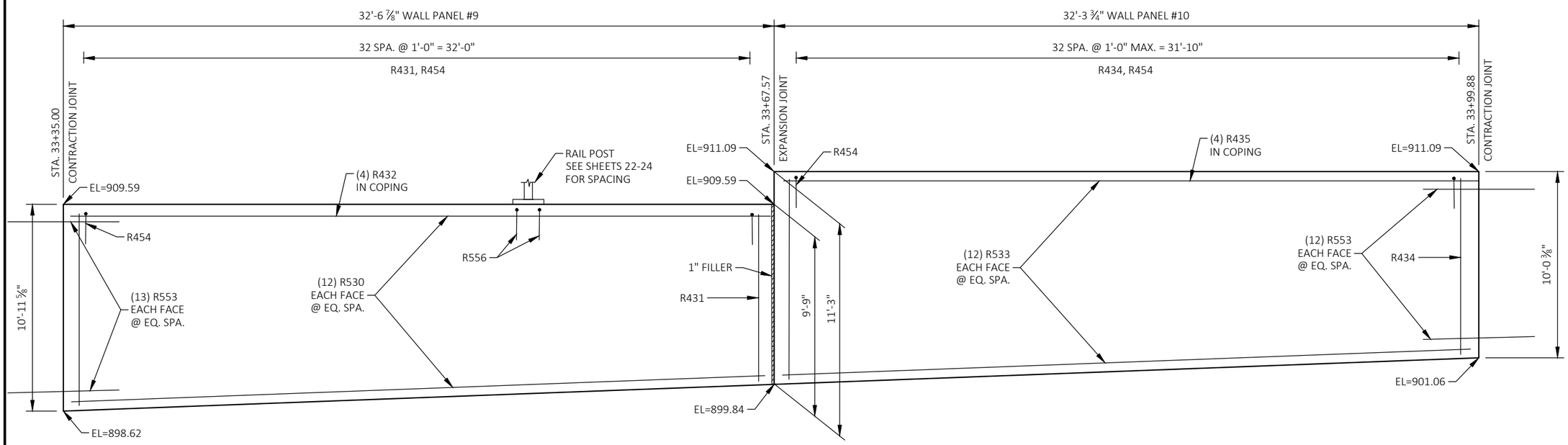

WALL SEGMENT 5

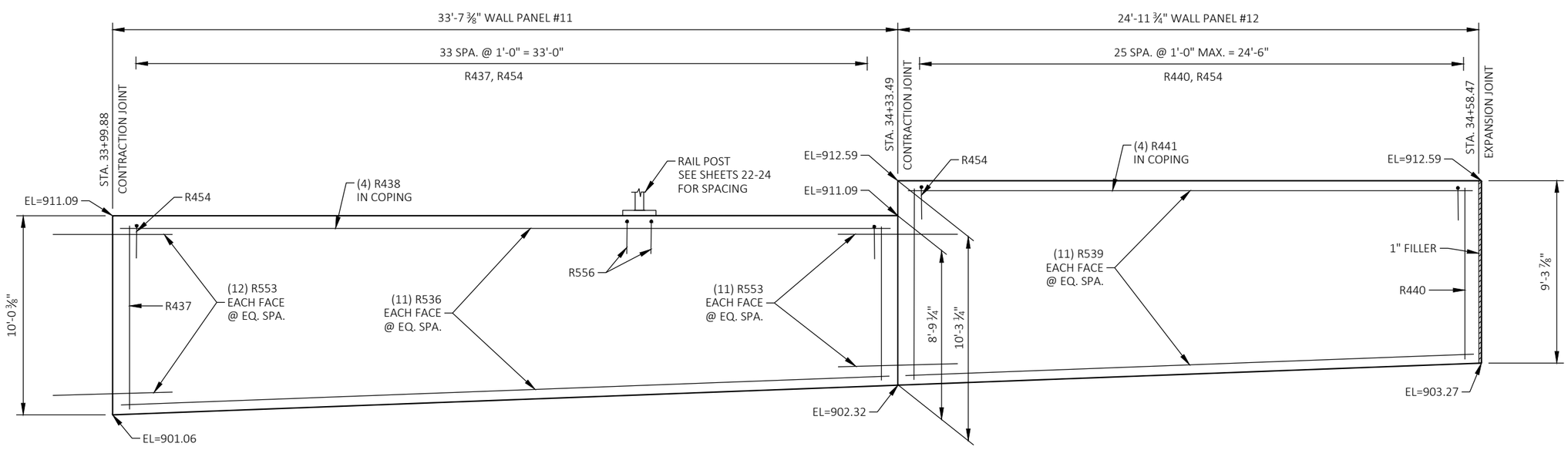

WALL SEGMENT 6

KL Engineering
[A] Better Experience
5400 King James Way
Suite 200
Madison, WI. 53719
Phone: (608) 663-1218
Phone: (800)-810-4012
http://klengineering.com
email@klengineering.com

CITY OF FITCHBURG
WALL REINFORCEMENT - 3
R-13-356

Project No:	19-3488
Date:	OCT 2019
Designed By:	CDH
Drafted By:	STD
Checked By:	CAH

Revisions:

SHEET NO.

18 OF 25

PLOT DATE : 7/28/2019 11:01 AM
PLOT BY : SCOTT DEMEUSE
FILE NAME : G:\FITCHBRG\18013-000\CIVIL3D\SHEETSPLAN\STRUCTURES CAD\080519-W.REF_4.DWG

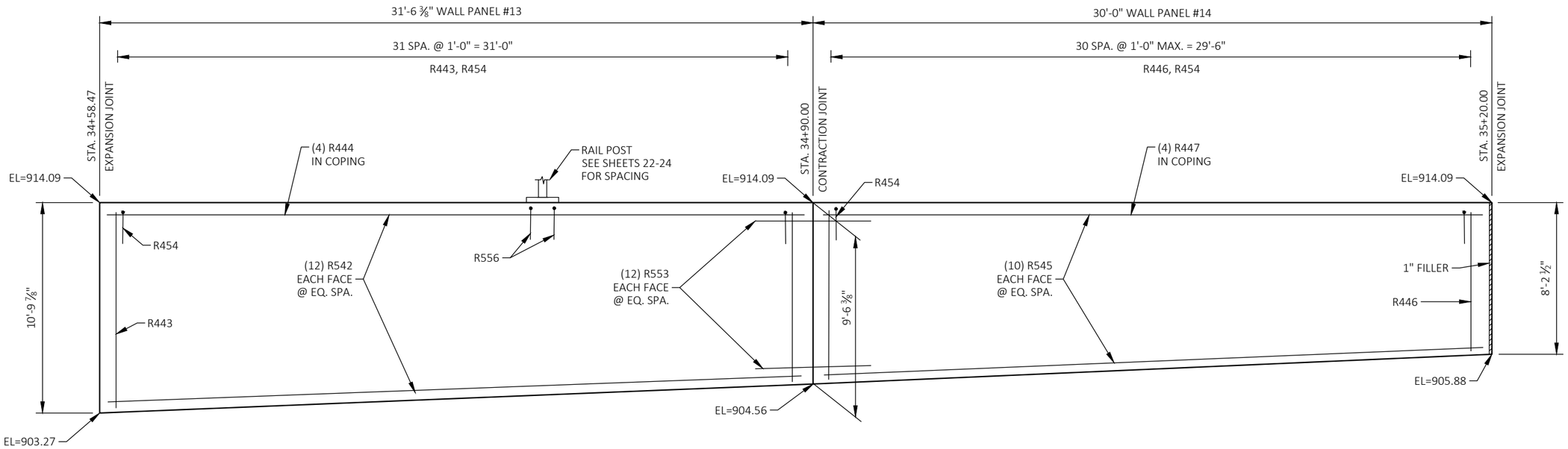

WALL SEGMENT 7

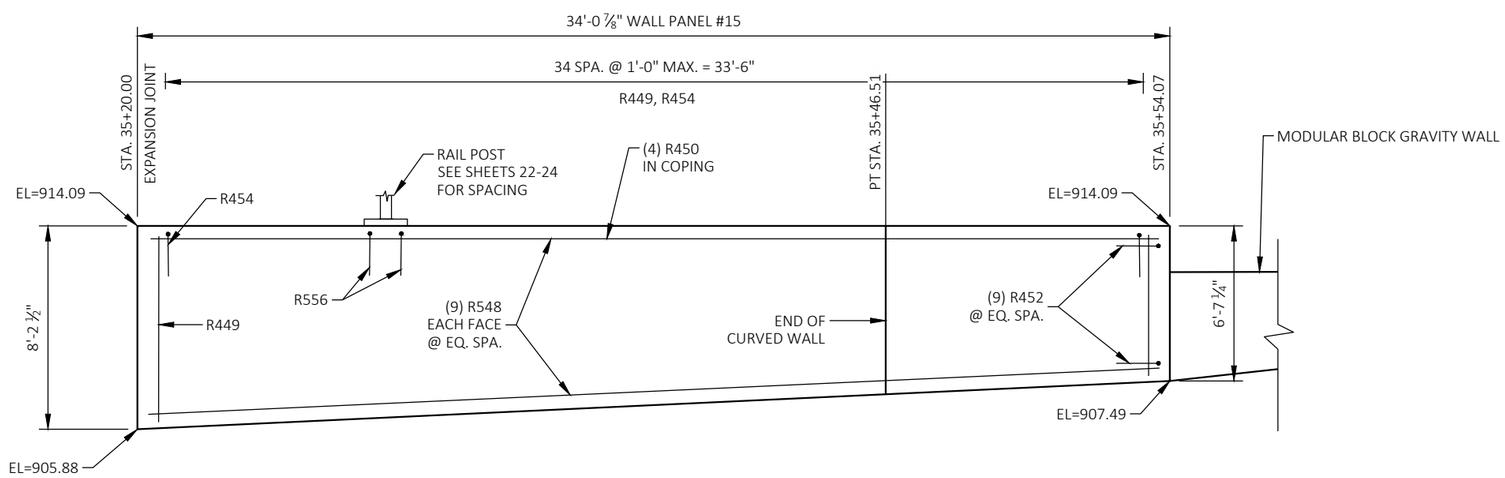

WALL SEGMENT 8

KL Engineering
[A] Better Experience
5400 King James Way
Suite 200
Madison, WI. 53719
Phone: (608) 663-1218
Phone: (800)-810-4012
http://klengineering.com
email@klengineering.com

CITY OF FITCHBURG

WALL REINFORCEMENT - 4
R-13-356

Project No:	19-3488
Date:	OCT 2019
Designed By:	CDH
Drafted By:	STD
Checked By:	CAH

Revisions:

SHEET NO.

19 OF 25

PLOT DATE : 7/28/2019 11:03 AM
PLOT BY : SCOTT DEMEUSE
FILE NAME : G:\FITCHBRG\18013-000\CIVIL3D\SHEETSPLAN\STRUCTURES CAD\080520-W.REF_5.DWG

BILL OF BARS RETAINING WALLS

COATED = 19,650 LBS.

BAR MARK	NO. REQ'D.	LENGTH	COAT	BENT	⚠ BAR SERIES	LOCATION
R501	18	26'-6"	X			PANEL #1 - HORIZ
R502	4	13'-0"	X			PANEL #1 - HORIZ
R403	28	7'-9"	X		X	PANEL #1 - VERT
R404	28	8'-8"	X		X	PANEL #1 - VERT
R405	8	13'-0"	X			PANEL #1 - HORIZ - COPING
R506	22	30'-4"	X			PANEL #2 - HORIZ
R407	62	9'-4"	X		X	PANEL #2 - VERT
R408	4	30'-4"	X			PANEL #2 - HORIZ - COPING
R509	20	30'-8"	X			PANEL #3 - HORIZ
R410	64	8'-0"	X			PANEL #3 - VERT
R411	4	30'-8"	X		X	PANEL #3 - HORIZ - COPING
R512	20	34'-2"	X			PANEL #4 - HORIZ
R513	4	16'-10"	X			PANEL #4 - HORIZ
R414	36	8'-7"	X		X	PANEL #4 - VERT
R415	36	9'-5"	X		X	PANEL #4 - VERT
R416	8	16'-10"	X			PANEL #4 - HORIZ - COPING
R517	48	29'-4"	X			PANEL #5 AND #6 - HORIZ
R418	60	10'-0"	X		X	PANEL #5 - VERT
R419	8	29'-4"	X			PANEL #5 AND #6 - HORIZ - COPING
R420	60	10'-4"	X		X	PANEL #6 - VERT
R521	26	26'-9"	X			PANEL #7 - HORIZ
R422	56	10'-10"	X		X	PANEL #7 - VERT
R423	4	26'-9"	X			PANEL #7 - HORIZ - COPING
R524	22	31'-8"	X			PANEL #8 - HORIZ
R525	4	10'-8"	X			PANEL #8 - HORIZ
R426	44	9'-11"	X		X	PANEL #8 - VERT
R427	24	10'-9"	X		X	PANEL #8 - VERT
R428	4	31'-8"	X			PANEL #8 - HORIZ - COPING
R429	4	10'-8"	X			PANEL #8 - HORIZ - COPING
R530	24	32'-1"	X			PANEL #9 - HORIZ
R431	66	10'-0"	X		X	PANEL #9 - VERT
R432	4	32'-1"	X			PANEL #9 - HORIZ - COPING
R533	24	31'-10"	X			PANEL #10 - HORIZ
R434	33	10'-3"	X		X	PANEL #10 - VERT
R435	4	31'-10"	X			PANEL #10 - HORIZ - COPING
R536	22	33'-3"	X			PANEL #11 - HORIZ
R437	68	9'-0"	X		X	PANEL #11 - VERT
R438	4	33'-3"	X			PANEL #11 - HORIZ - COPING
R539	22	24'-6"	X			PANEL #12 - HORIZ
R440	52	9'-5"	X		X	PANEL #12 - VERT
R441	4	24'-6"	X			PANEL #12 - HORIZ - COPING
R542	24	31'-2"	X			PANEL #13 - HORIZ
R443	64	9'-10"	X		X	PANEL #13 - VERT
R444	4	31'-2"	X			PANEL #13 - HORIZ - COPING
R545	20	29'-6"	X			PANEL #14 - HORIZ
R446	62	8'-6"	X		X	PANEL #14 - VERT
R447	4	29'-6"	X			PANEL #14 - HORIZ - COPING
R548	18	33'-8"	X			PANEL #15 - HORIZ
R449	70	7'-0"	X		X	PANEL #15 - VERT
R450	4	33'-8"	X			PANEL #15 - HORIZ - COPING
R451	9	4'-6"	X	X		PANEL #1 - HORIZ - END
R452	9	2'-11"	X	X		PANEL #15 - HORIZ - END
R553	188	6'-0"	X			CONTRACTION JOINTS - HORIZ
R454	473	1'-8"	X			COPING - VERT
R455	1	6'-3"	X			PANEL #15 - VERT - END
R556	174	2'-3"	X	X		RAILING POSTS - VERT

THE FIRST DIGIT OF A BAR MARK SIGNIFIES THE BAR SIZE.

ALL BAR BEND DIMENSIONS ARE OUT TO OUT OF BAR.

⚠ LENGTH SHOWN FOR BARS IN SERIES IS AN AVERAGE LENGTH AND SHOULD ONLY BE USE FOR BAR WEIGHT CALCULATIONS. SEE "BAR SERIES TABLE" FOR ACTUAL LENGTHS.

BAR SERIES TABLE

MARK	NO. REQUIRED	LENGTH
R403	2 SERIES OF 14	7'-5" TO 8'-0"
R404	2 SERIES OF 14	8'-5" TO 8'-11"
R407	2 SERIES OF 31	8'-8" TO 9'-11"
R410	2 SERIES OF 32	7'-5" TO 8'-8"
R414	2 SERIES OF 18	8'-3" TO 8'-11"
R415	2 SERIES OF 18	9'-1" TO 9'-9"
R418	2 SERIES OF 30	9'-5" TO 10'-7"
R420	2 SERIES OF 30	9'-10" TO 10'-11"
R422	2 SERIES OF 28	10'-4" TO 11'-4"
R426	2 SERIES OF 22	9'-6" TO 10'-4"
R427	2 SERIES OF 12	10'-7" TO 11'-0"
R431	2 SERIES OF 33	9'-5" TO 10'-7"
R434	2 SERIES OF 33	9'-8" TO 10'-11"
R437	2 SERIES OF 34	8'-5" TO 9'-8"
R440	2 SERIES OF 26	8'-11" TO 9'-11"
R443	2 SERIES OF 32	9'-2" TO 10'-5"
R446	2 SERIES OF 31	7'-10" TO 9'-2"
R449	2 SERIES OF 35	6'-3" TO 7'-10"

BUNDLE AND TAG EACH SERIES SEPARATELY.

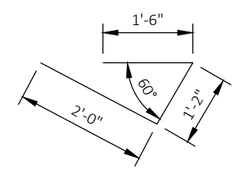

R451

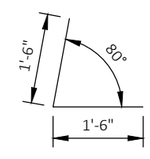

R452

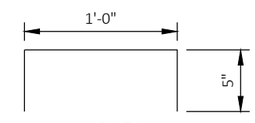

R454

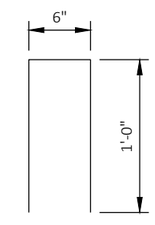

R556

KL Engineering
[A] Better Experience
5400 King James Way
Suite 200
Madison, WI. 53719
Phone: (608) 663-1218
Phone: (800)-810-4012
http://klengineering.com
email@klengineering.com

CITY OF FITCHBURG

WALL REINFORCEMENT DETAILS
R-13-356

Project No:	19-3488
Date:	OCT 2019
Designed By:	CDH
Drafted By:	STD
Checked By:	CAH

Revisions:

SHEET NO.

20 OF 25

PLOT DATE : 7/30/2019 9:16 AM

PLOT BY : SCOTT DEMEUSE

FILE NAME : G:\FITCHBRG\18013-000\CIVIL3D\SHEETSPLAN\STRUCTURES CAD\080521-AES_LAYOUT.DWG

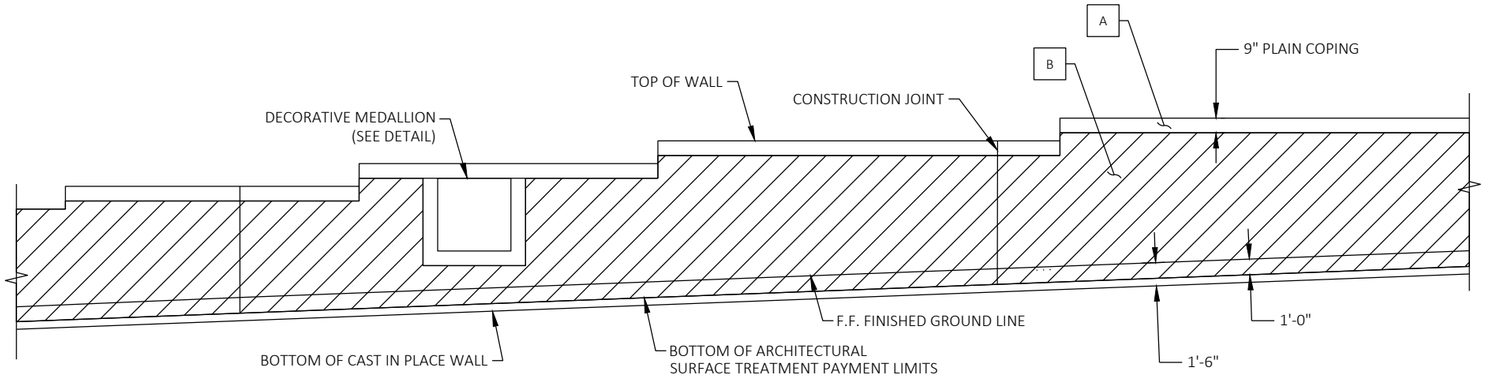

TYPICAL FORMLINER LAYOUT ON F.F. WALL

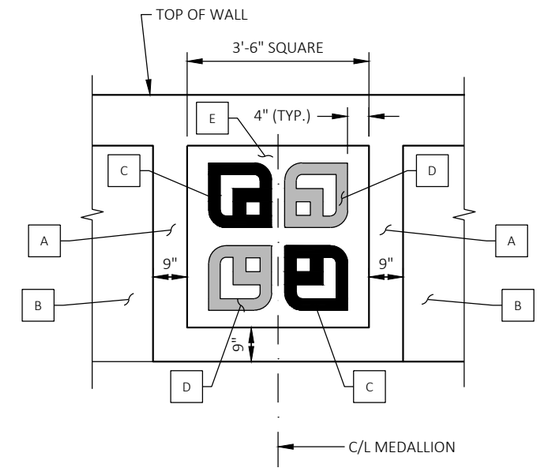

DECORATIVE MEDALLION

C/L MEDALLION STA.
31+33.84
32+95.98
34+63.78

NOTES:

THE FORMLINER COURSING SHALL BE VERTICALLY ALIGNED.

THE FORMLINER COURSING SHALL BE CONTINUOUS AND LEVEL ACROSS CONSTRUCTION JOINTS.

WRAP AROUND/MATCH FORMLINER PATTERN AT CORNERS

FORMLINER BLOCK FACE SHALL MATCH THE APPEARANCE (SIZE, TEXTURE, RELIEF) OF REDI-ROCK LEDGESTONE OR APPROVED EQUAL.

MEDALLION FORMLINER TO BE PROVIDED BY CITY OF FITCHBURG.

MAINTAIN 2-INCHES MIN. CONCRETE OVER REINFORCING AT MEDALLION.

LEGEND

A	APPLY CONCRETE STAINING TO HORIZONTAL AND VERTICAL COPING FACES. COLOR SHALL BE FEDERAL COLOR NO. 26134.
B	APPLY CONCRETE STAINING FROM BOTTOM COPING TO 1'-0" BELOW FINISHED GRADE ELEVATION, FRONT AND BACK FACE OF WALL. COLOR SHALL BE FEDERAL COLOR NO. 33448.
C	APPLY CONCRETE STAINING PANTONE MATCHING SYSTEM COLOR PMS 308 (BLUE)
D	APPLY CONCRETE STAINING PANTONE MATCHING SYSTEM COLOR PMS 308 (BLUE)
E	APPLY CONCRETE STAINING FEDERAL COLOR NO. 27780 (WHITE)

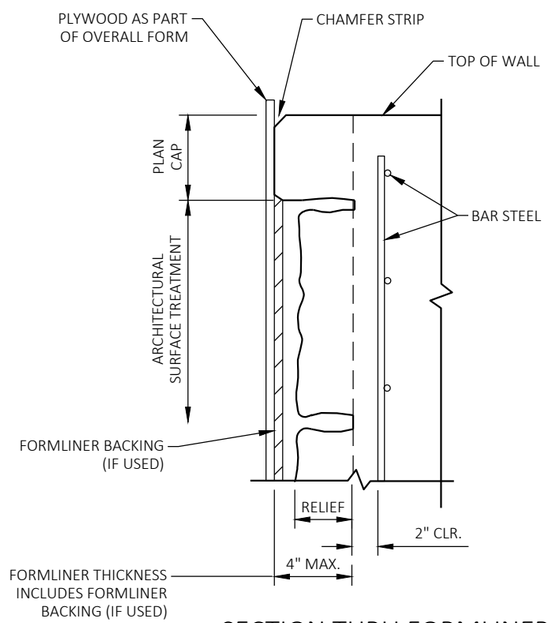

SECTION THRU FORMLINER

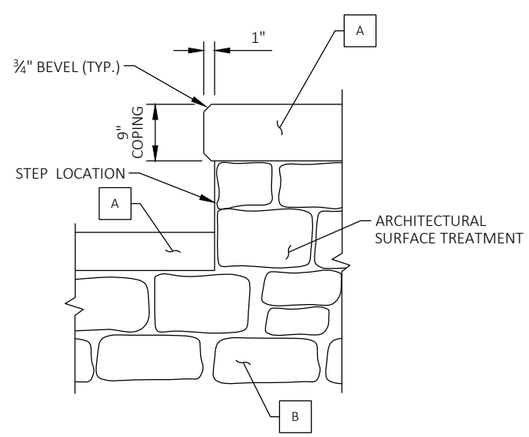

STEP DETAIL

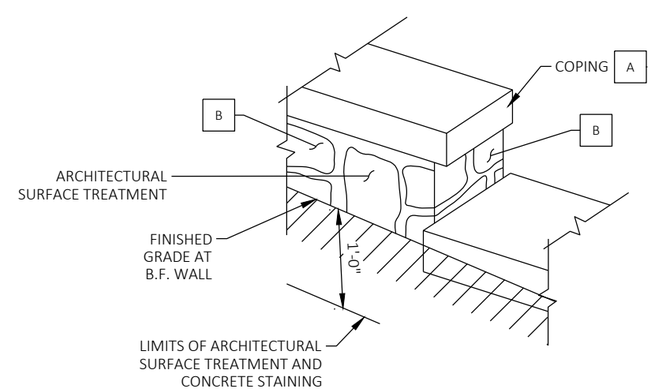

BACK FACE WALL DETAIL

KL Engineering
[A] Better Experience
5400 King James Way
Suite 200
Madison, WI. 53719
Phone: (608) 663-1218
Phone: (800)-810-4012
http://klengineering.com
email@klengineering.com

CITY OF FITCHBURG
AESTHETIC DETAILS
R-13-356

Project No:	19-3488
Date:	OCT 2019
Designed By:	CDH
Drafted By:	STD
Checked By:	CAH

Revisions:

SHEET NO.

21 OF 25

PLOT DATE : 5/8/2019 9:13 AM
PLOT BY : SCOTT DEMEUSE
FILE NAME : G:\FITCHBRG\18013-000\CIVIL3D\SHEETSPLAN\STRUCTURES CAD\080404-WD.DWG

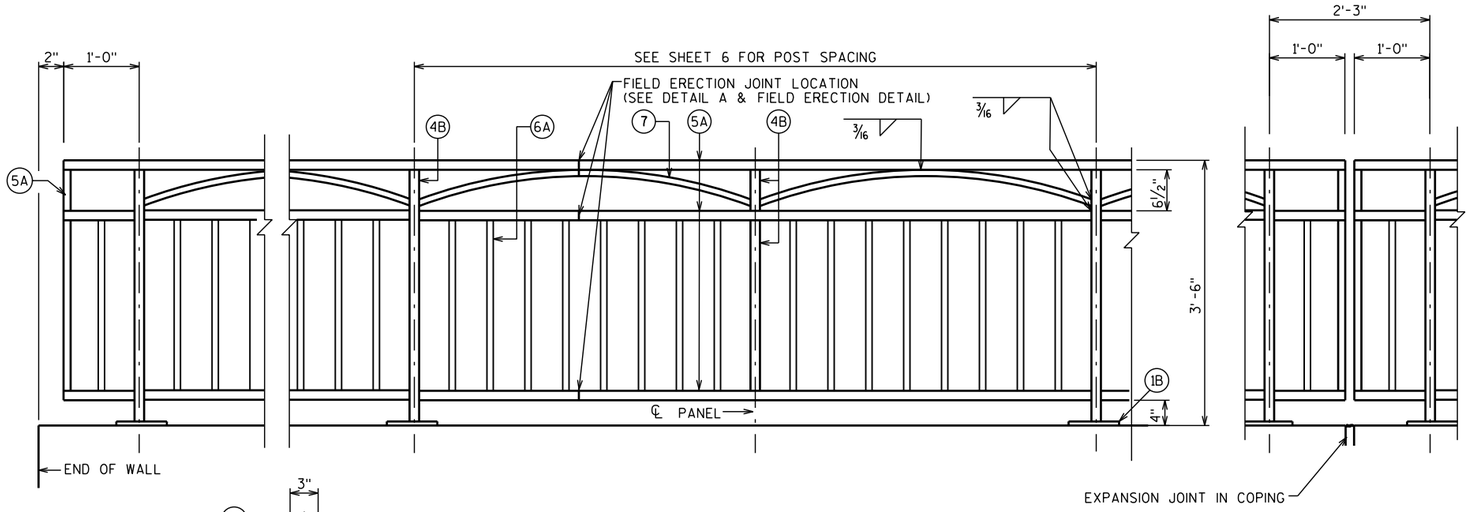

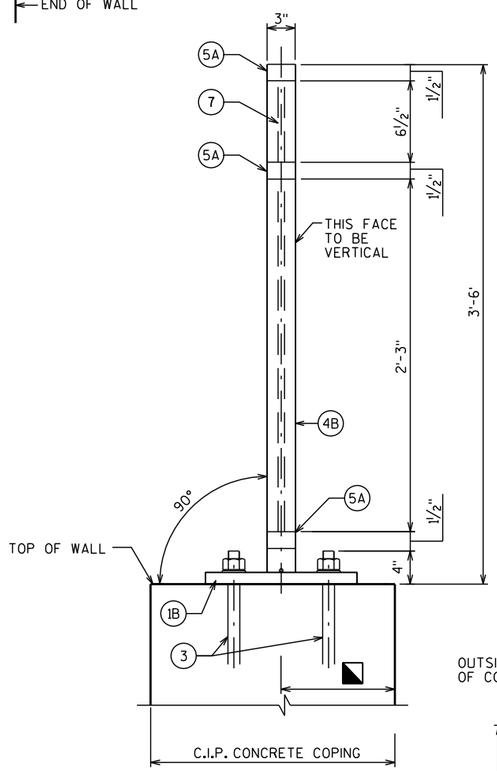

SECTION THRU RAILING

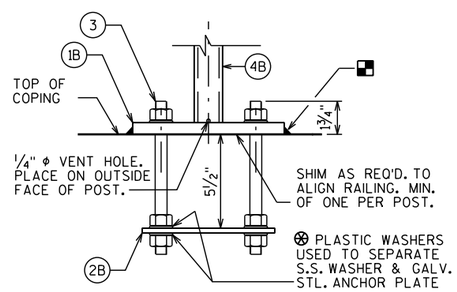

ANCHORAGE FOR RAIL POSTS

NOTE: ANCHOR PLATE NOT REQUIRED WHEN ADHESIVE ANCHORS ARE USED.

1'-0" FOR MODULAR BLOCK WALL
8" FOR SOLDIER PILE WALL

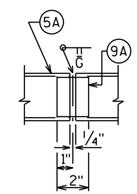

SHOP RAIL SPLICE DETAIL

(LOCATION MUST BE SHOWN ON SHOP DRAWINGS)

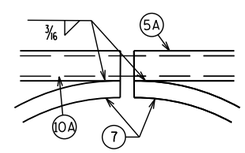

DETAIL A

LEGEND

(1B) PLATE 5/8" X 6" X 10" WITH 3/4" X 1 1/2" SLOTTED HOLES.

(2B) 1/4" X 5" X 9" ANCHOR PLATE WITH 11/16" DIA. HOLE FOR THR'D. RODS NO. 3.

(3) 5/8" DIA. X 9" LONG, TYPE 316 STAINLESS STEEL THREADED RODS (MIN. TENSILE STRENGTH = 70 KSI) WITH NUT AND WASHERS OF SAME ALLOY GROUP. ALTERNATIVE ANCHORAGE: CONCRETE ADHESIVE ANCHORS 5/8-INCH. EMBED 7" IN CONCRETE FOR RAIL POSTS. EMBED 5" IN CONCRETE FOR END RAILS. ADHESIVE ANCHORS SHALL CONFORM TO SECTION 502.2.12 OF THE STANDARD SPECIFICATIONS.

(4B) STRUCTURAL TUBING 3" X 3" X 3/16". PLACE VERTICAL. WELD TO NO. 1 & 5.

(5A) STRUCTURAL TUBING 3" X 1 1/2" X 3/16" RAILS. WELD TO NO. 1 & NO. 4. INSIDE OF TUBE TO BE PAINTED AT ALL FIELD ERECTION & EXPANSION JOINTS.

(6A) BAR 1" X 1" PICKETS. WELD TO NO. 5. (SPACE AT 6" MAX. ℄ TO ℄ SPACING) PLACE VERTICAL.

(7) BAR 1" X 1" BEND TO REQUIRED RADIUS. WELD TO NO. 4B & 5A.

(9A) RECTANGULAR SLEEVE FABRICATED FROM 3/16" PLATES. PROVIDE "SLIDING FIT".

(10A) RECTANGULAR SLEEVE FABRICATED FROM 3/16" PLATES. (1'-4" @ FIELD ERECTION JTS.)

RAILING NOTES

BID ITEM SHALL BE "RAILING STEEL PEDESTRIAN TYPE C3 R-13-355" WHICH SHALL INCLUDE ALL STEEL ITEMS SHOWN.

POST BASE PLATES SHALL BE FLAT WITH ALL SURFACES SMOOTH AND FREE FROM WARP AND ALL EDGES SMOOTH, STRAIGHT AND VERTICAL. ALL PLATE CUTS SHALL BE MACHINE OR MACHINE FLAME CUTS.

ALL PLATES, BARS, AND RECTANGULAR SLEEVES SHALL CONFORM TO ASTM A709 GRADE 36. ALL STRUCTURAL TUBING SHALL CONFORM TO ASTM A500 GRADE B.

ANCHORAGES SHALL BE ACCURATELY PLACED TO PROVIDE CORRECT ALIGNMENT OF RAILING. SET NORMAL TO GRADE.

CUT BOTTOM OF POST TO MAKE POST VERTICAL IN BOTH TRANSVERSE AND LONGITUDINAL DIRECTION.

STEEL SHIMS SHALL BE PROVIDED & USED UNDER BASE PLATES WHERE REQUIRED FOR ALIGNMENT, AND SHALL BE GALVANIZED.

CAULK AROUND PERIMETER OF BASE PLATES, NO. 1, AND FILL BOLT SLOT OPENINGS IN SHIMS AND BASE PLATES WITH NON-STAINING GRAY NON-BITUMINOUS JOINT SEALER.

ALL MATERIAL (EXCEPT NO. 3) SHALL BE GALVANIZED AFTER FABRICATION. PRIOR TO GALVANIZING, THE STEEL RAILING SHALL BE GIVEN A NO. 6 BLAST CLEANING PER SSPC SPECIFICATIONS. PAINT OVER GALVANIZING WITH AN APPROVED TIE COAT AND TOP COAT AS SPECIFIED IN THE CONTRACT DOCUMENTS. THE RAILING SHALL BE PAINTED FEDERAL COLOR NO. 14090.

VENT HOLES SHALL BE DRILLED IN POST AND RAIL MEMBERS AS REQUIRED TO FACILITATE GALVANIZING AND DRAINAGE.

RAILING SHALL BE FABRICATED IN LENGTHS THAT INCLUDE 3 OR 4 POSTS.

TOUCH-UP PAINTING TO BE DONE AT COMPLETION OF STEEL RAILING INSTALLATION TO THE SATISFACTION OF THE ENGINEER AT NO EXTRA COST.

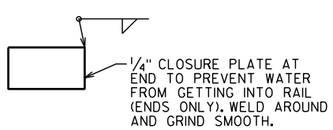

CLOSURE PLUG DETAIL

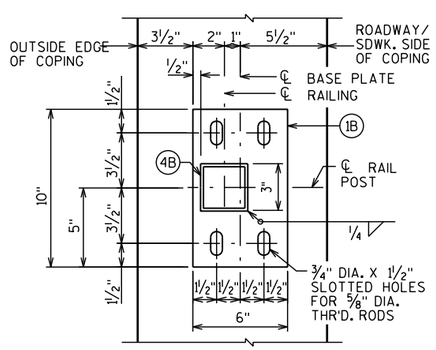

TYPICAL RAIL POST BASE PLATE

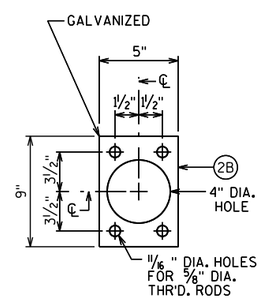

ANCHOR PLATE

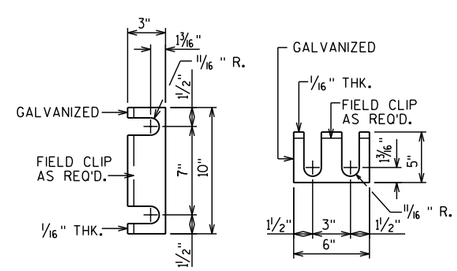

RAIL POST SHIM DETAIL

(2 SETS PER POST)

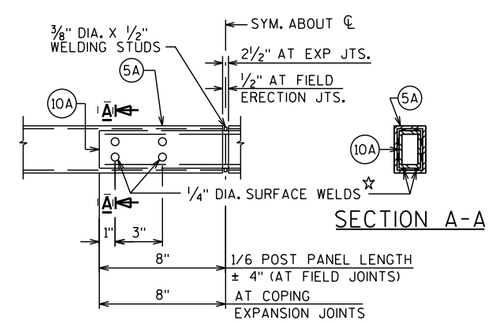

SECTION A-A

FIELD ERECTION JOINT DETAIL

MIN. 5/8" FLAT SURFACE DIA. PUNCHINGS OR STUDS MAY BE USED AS AN ALTERNATE.

KL Engineering
[A] Better Experience
5400 King James Way
Suite 200
Madison, WI. 53719
Phone: (608) 663-1218
Phone: (800)-810-4012
http://klengineering.com
email@klengineering.com

CITY OF FITCHBURG

RAILING STEEL PEDESTRIAN TYPE C3 R-13-356

Project No:	19-3488
Date:	OCT 2019
Designed By:	CDH
Drafted By:	STD
Checked By:	CDH

Revisions:

SHEET NO.

22 OF 25

PLOT DATE : 7/29/2019 8:29 AM
PLOT BY : COLE HERNIKL
FILE NAME : G:\FITCHBRG\18013-000\CIVIL3D\SHEETSPLAN\STRUCTURES CAD\080523-RD.DWG

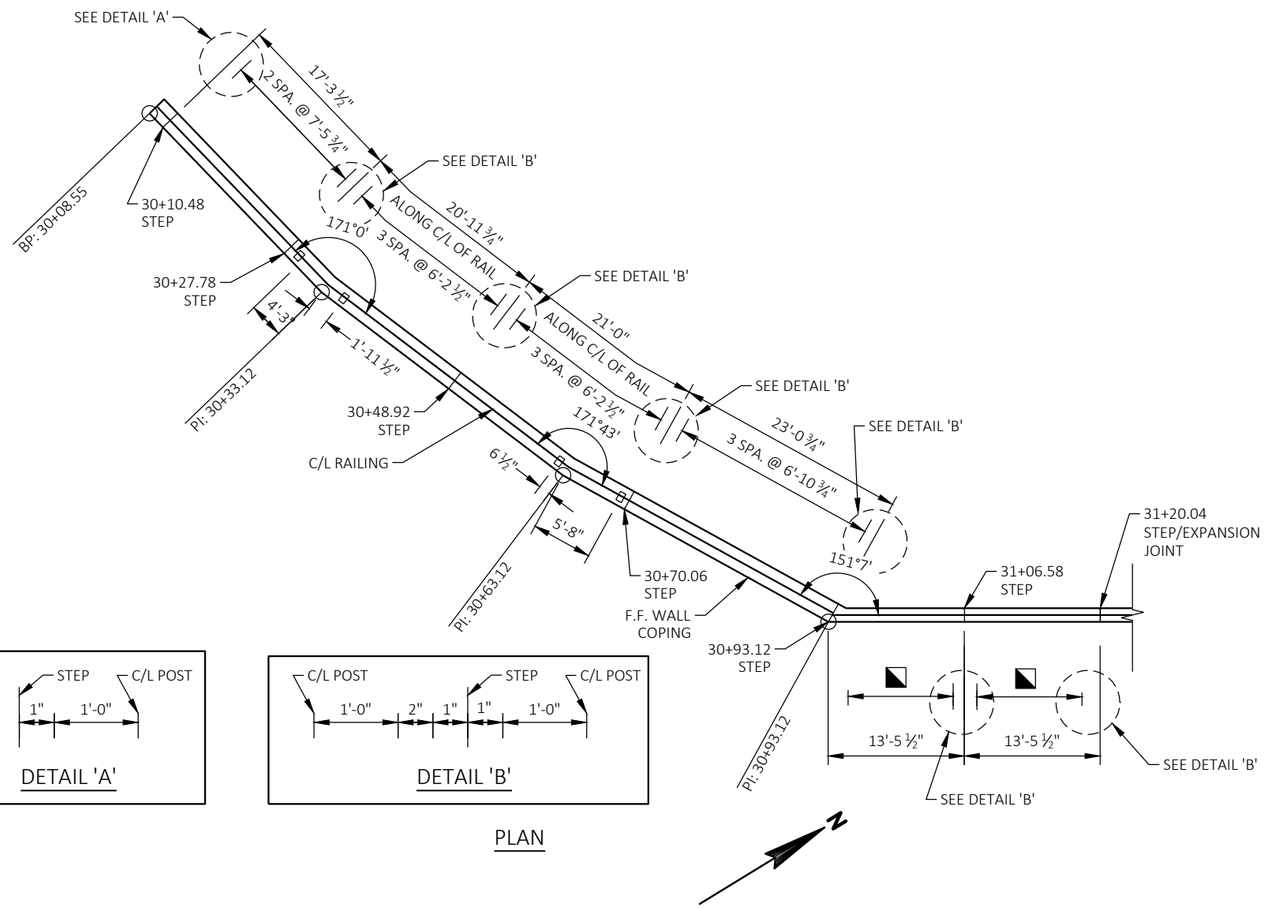

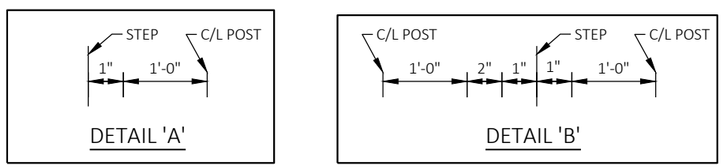

PLAN

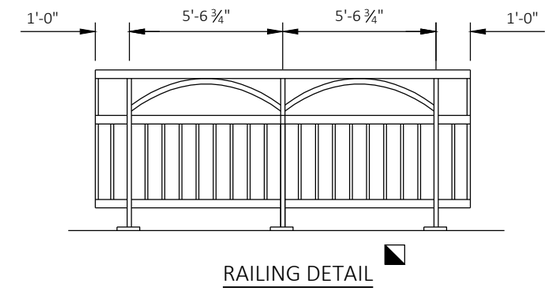

RAILING DETAIL

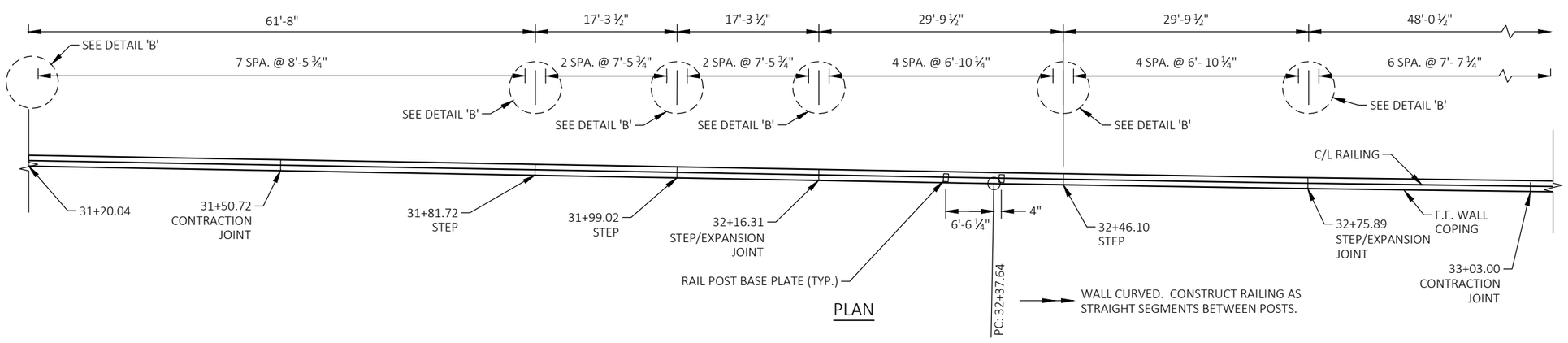

PLAN

KL Engineering
[A] Better Experience
5400 King James Way
Suite 200
Madison, WI. 53719
Phone: (608) 663-1218
Phone: (800)-810-4012
http://klengineering.com
email@klengineering.com

CITY OF FITCHBURG

RAILING LAYOUT - 1
R-13-356

Project No:	19-3488
Date:	OCT 2019
Designed By:	CAH
Drafted By:	STD
Checked By:	CDH

Revisions:

SHEET NO.

23 OF 25

PLOT DATE : 7/28/2019 11:27 AM
PLOT BY : SCOTT DEMEUSE
FILE NAME : G:\FITCHBRG\18013-000\CIVIL3D\SHEETSPLAN\STRUCTURES CAD\080523-RD.DWG

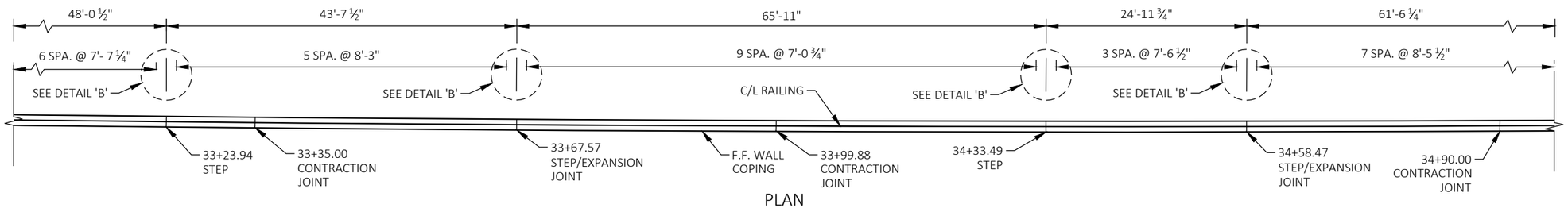

PLAN

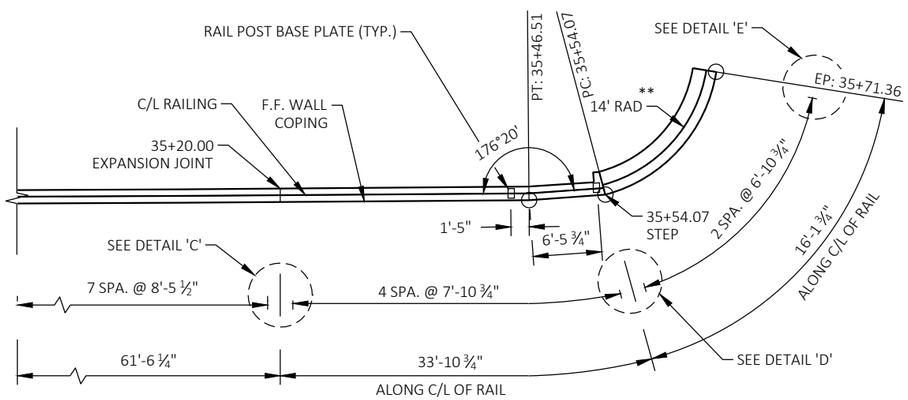

PLAN

** ADJUST RADIUS OF RAIL AS REQUIRED FOR BATTER OF MODULAR BLOCK WALL.

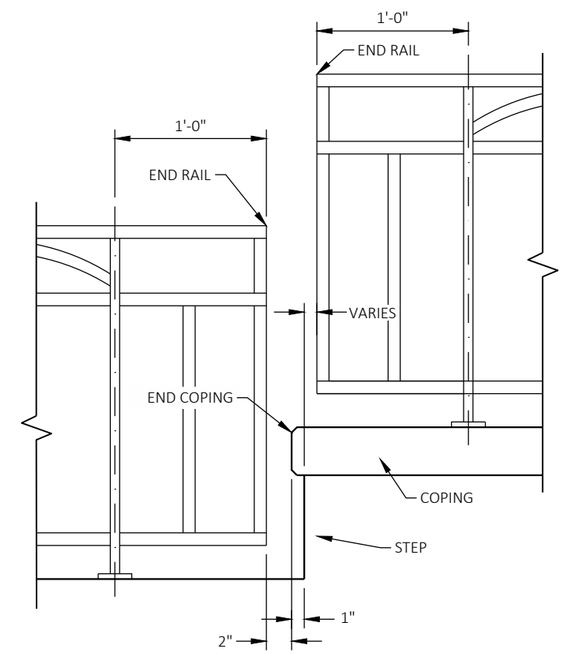

STEP DETAIL

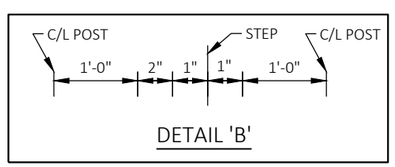

DETAIL 'B'

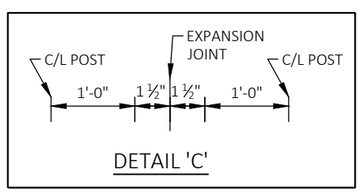

DETAIL 'C'

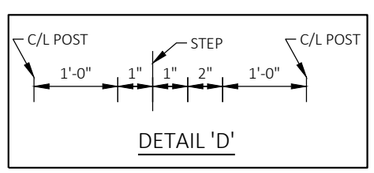

DETAIL 'D'

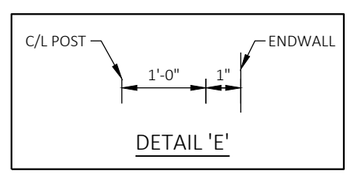

DETAIL 'E'

KL Engineering
[A] Better Experience
5400 King James Way
Suite 200
Madison, WI. 53719
Phone: (608) 663-1218
Phone: (800)-810-4012
http://klengineering.com
email@klengineering.com

CITY OF FITCHBURG

RAILING LAYOUT - 2
R-13-356

Project No:	19-3488
Date:	OCT 2019
Designed By:	CAH
Drafted By:	STD
Checked By:	CDH

Revisions:

SHEET NO.

24 OF 25

PLOT DATE : 7/28/2019 11:31 AM

PLOT BY : SCOTT DEMEUSE

FILE NAME : G:\FITCHBRG\18013-000\CIVIL3D\SHEETSPLAN\STRUCTURES CAD\080525-SE.DWG

BORING #	DATE COMPLETED	NORTHING (Y)	EASTING (X)
BORING 8	7/11/2018	464,486.534	812,965.529
BORING 9	7/18/2018	464,649.036	813063.043
BORING 10	7/12/2018	464,703.776	813,101.965
BORING 11	7/12/2018	464,782.973	813,156.046
BORINGS COMPLETED BY: SOILS & ENGINEERING SERVICES, INC.			
REPORT COMPLETED BY: SOILS & ENGINEERING SERVICES, INC.			
ALL COORDINATES REFERENCED TO WCCS NAD DANE COUNTY			

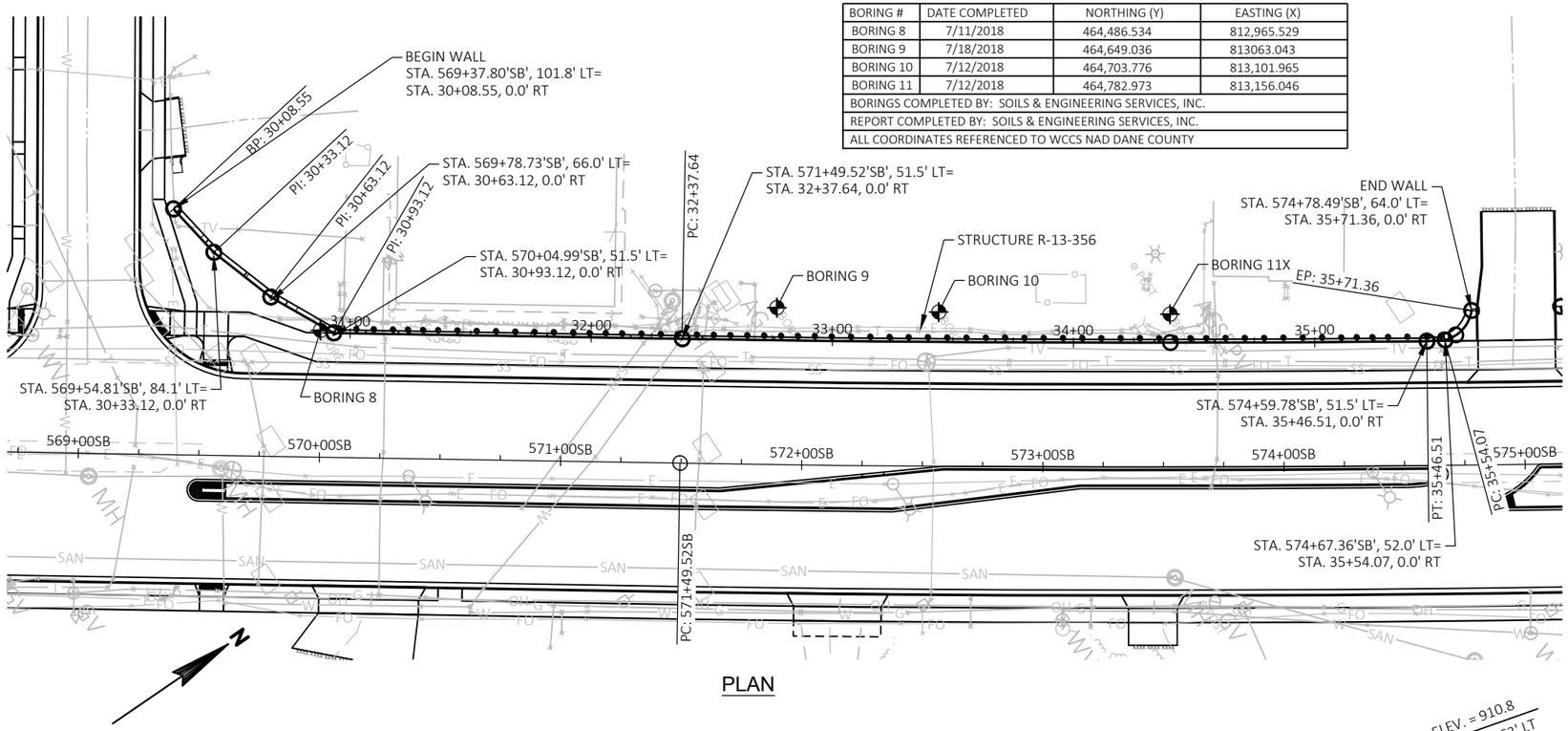

PLAN

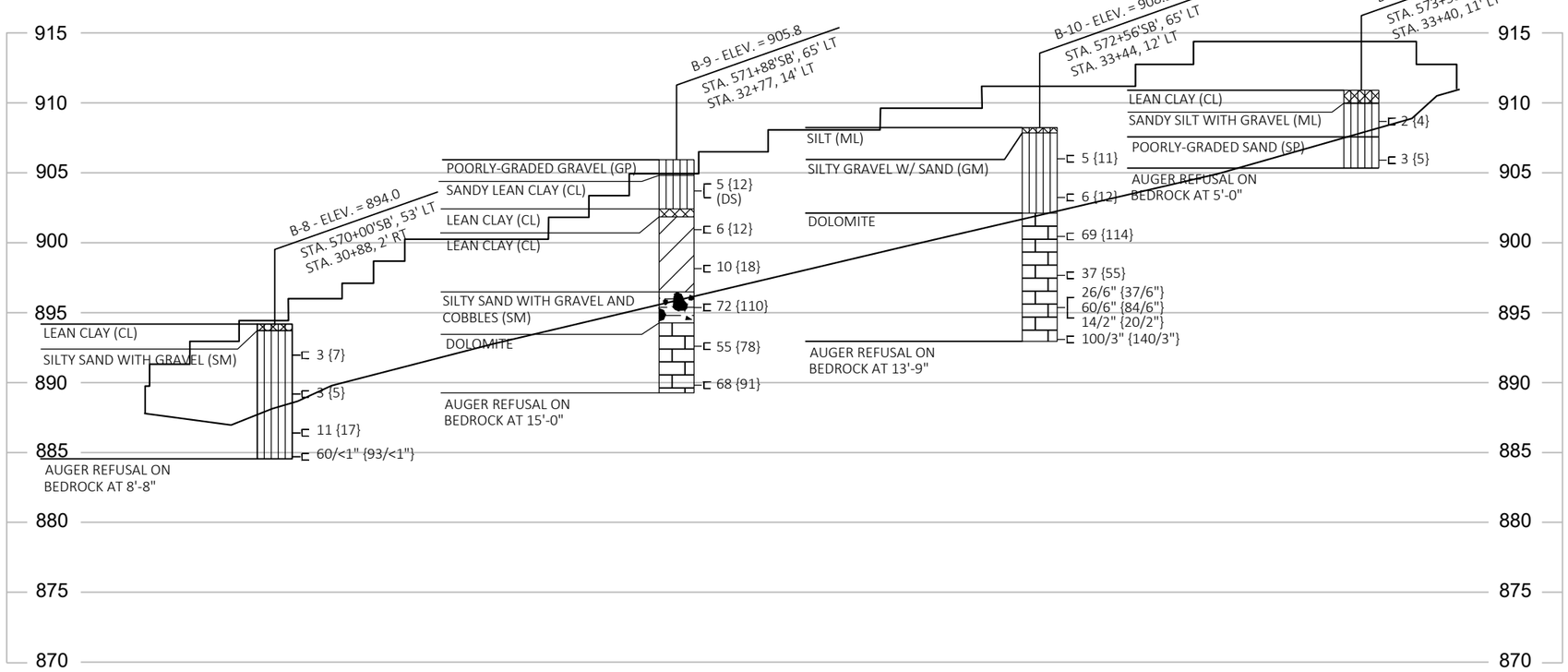

MATERIAL SYMBOLS

ASPHALT	TOPSOIL	PEAT
CONCRETE	FILL	GRAVEL
SAND	CLAY	SILT
BOULDERS OR COBBLES	LIMESTONE	BEDROCK (UNKNOWN)
SHALE	SANDSTONE	IGNEOUS/ META

LEGEND OF BORING

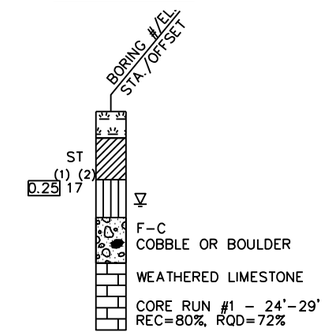

(1) UNCONFINED STRENGTH, AS DETERMINED BY A POCKET PENETROMETER (TSF)

(2) UNLESS OTHERWISE, SPECIFIED THE SPT 'N' VALUE IS BASED ON AASHTO T-206, STANDARD PENETRATION TEST. THE SPT 'N' VALUE PRESENTED HAS NOT BEEN CORRECTED FOR OVERBURDEN PRESSURE OR HAMMER EFFICIENCY.

GROUND WATER ELEVATION

- AT TIME OF DRILLING
- END OF DRILLING
- AFTER DRILLING

ABBREVIATIONS

F-FINE M-MEDIUM C-COARSE ST-SHELBY TUBE

SUBSURFACE EXPLORATION FOR FOUNDATION DESIGN AND BIDDERS INFORMATION

BORINGS WERE COMPLETED AT POINTS APPROXIMATELY AS INDICATED ON THIS DRAWING TO OBTAIN INFORMATION CONCERNING THE CHARACTER OF SUBSURFACE MATERIALS FOUND AT THE SITE. BECAUSE THE INVESTIGATED DEPTHS ARE LIMITED AND THE AREA OF THE BORINGS IS VERY SMALL IN RELATION TO THE ENTIRE SITE, THE WISCONSIN DEPARTMENT OF TRANSPORTATION DOES NOT WARRANT SIMILAR SUBSURFACE CONDITIONS BELOW, BETWEEN, OR BEYOND THESE BORINGS. VARIATIONS IN SOIL CONDITIONS SHOULD BE EXPECTED AND FLUCTUATIONS IN GROUNDWATER LEVELS MAY OCCUR.

KL Engineering
[A] Better Experience
5400 King James Way
Suite 200
Madison, WI. 53719
Phone: (608) 663-1218
Phone: (800)-810-4012
http://klengineering.com
email@klengineering.com

CITY OF FITCHBURG

SUBSURFACE EXPLORATION B-13-356

Project No:	19-3488
Date:	OCT 2019
Designed By:	CDH
Drafted By:	STD
Checked By:	CAH

Revisions:

SHEET NO.

25 OF 25

PLOT DATE : 12/13/2019 11:59 AM

PLOT BY : JENNIFER LAUER

FILE NAME : G:\FITCHBRG\18013-000\CIVIL3D\SHEETSPLAN\STRUCTURES CAD\080601-GP.DWG

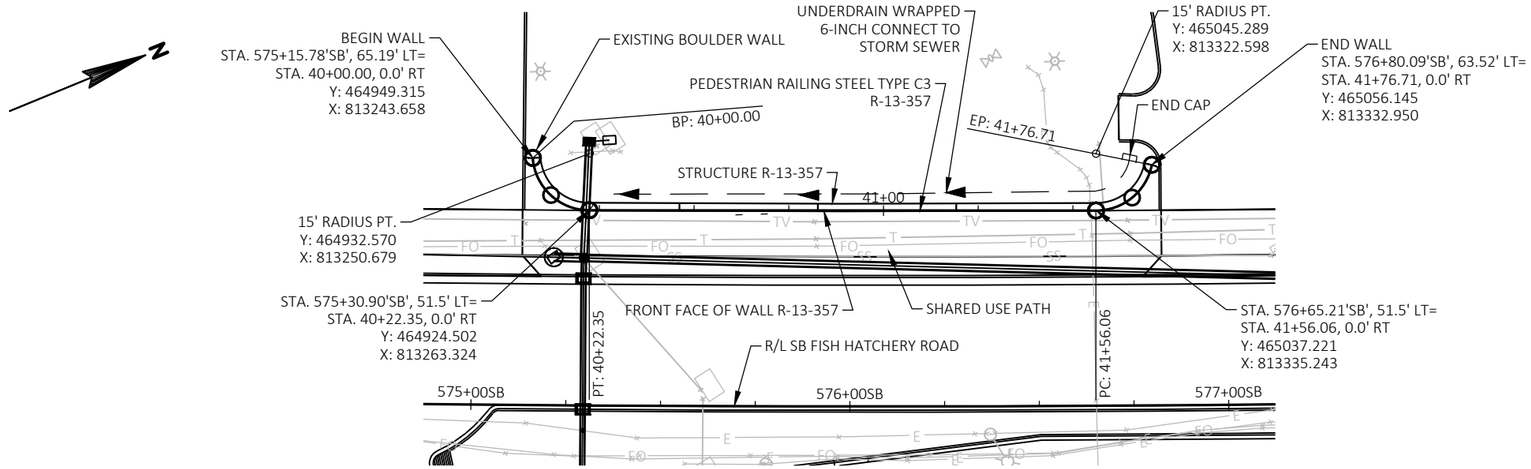

PLAN

(WALL MODULAR BLOCK GRAVITY LRFD, R-13-357)

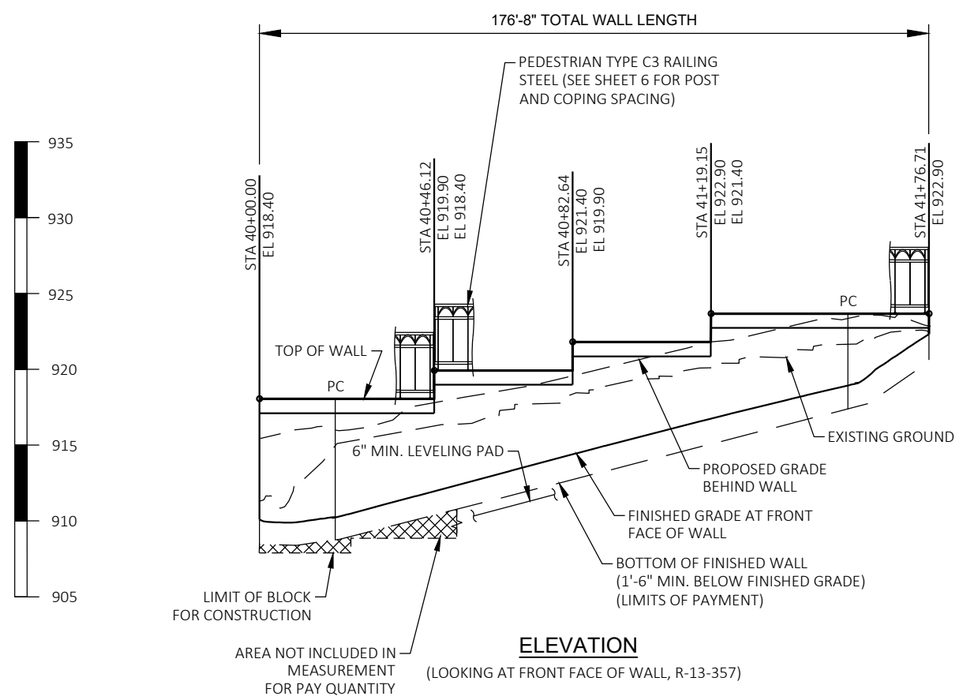

ELEVATION

(LOOKING AT FRONT FACE OF WALL, R-13-357)

TOTAL ESTIMATED QUANTITIES

BID ITEM NO.	BID ITEMS	UNIT	TOTAL
648.2	PIPE UNDERDRAIN WRAPPED 6-INCH	LF	187
902.18.05	RAILING STEEL PEDESTRIAN TYPE C3 R-13-357	LF	173
902.19.05	CONCRETE STAINING R-13-357	SF	1,800
902.20.05	WALL MODULAR BLOCK GRAVITY LRFD, R-13-357	SF	1,132

GENERAL NOTES

DRAWINGS SHALL NOT BE SCALED

THE PLAN QUANTITY FOR THE BID ITEM "WALL MODULAR BLOCK GRAVITY LRFD R-13-357" IS BASED ON A WALL HEIGHT MEASURED FROM THE TOP OF THE WALL TO A CONSTANT DEPTH OF 1'-6" BELOW FINISHED GRADE.

BLOCK FACE SHALL HAVE THE APPEARANCE OF REDI-ROCK LEDGE STONE OR APPROVED EQUAL. WALL CONCRETE STAINING COLOR TO BE FEDERAL COLOR NO. 33448. COPING CONCRETE STAINING COLOR TO BE FEDERAL COLOR NO. 26134.

WEATHERED ROCK IS EXPECTED WITHIN WALL EXCAVATION LIMITS.

EXCAVATION FOR WALL IS INCLUDED WITH ITEM "WALL MODULAR BLOCK GRAVITY LRFD R-13-357".

ALL STATION AND ALL ELEVATIONS ARE IN FEET.

ALL DIMENSIONS AND STATIONING ARE ALONG THE FRONT FACE OF WALL AT FINISHED GROUND, UNLESS SHOWN OTHERWISE.

DESIGN DATA

THE CONTRACTOR SHALL PROVIDE COMPLETE DESIGN, PLANS, DETAILS, SPECIFICATIONS, AND SHOP DRAWINGS FOR THE RETAINING WALLS IN ACCORDANCE WITH THE SPECIAL PROVISIONS. THE RETAINING WALL MANUFACTURER SHALL PROVIDE TECHNICAL ASSISTANCE TO THE CONTRACTOR DURING CONSTRUCTION. THE COST OF FURNISHING THESE ITEMS SHALL BE INCLUDED IN THE BID ITEM "WALL MODULAR BLOCK GRAVITY LRFD R-13-357".

PLANS, ELEVATIONS AND DETAILS SHOWN ON THESE DRAWINGS ARE INTENDED TO INDICATE WALL LOCATIONS, LENGTHS, HEIGHTS, AND DETAILS COMMON TO THE WALL SYSTEM SELECTED. THE CONTRACTOR SHALL VERIFY THAT THE WALL SYSTEM SELECTED WILL CONFORM TO THE REQUIRED ALIGNMENTS AND DETAILS.

THE RETAINING WALL IS TO BE DESIGNED USING ELEVATIONS GIVEN ON THIS SHEET AND IN THE GEOMETRY TABLE ON SHEET 3.

DESIGN FOR RETAINING WALL TO PROVIDE FOR FINISHED GRADE SLOPED BEHIND WALL AS SHOWN ON THE TYPICAL WALL SECTION AND ROADWAY CROSS SECTIONS.

DESIGN RETAINING WALL FOR A LIVE LOAD OF 100 PSF.

CONTRACTOR TO VERIFY STEP LOCATIONS BASED ON BLOCK LENGTHS USED. WALL WAS DESIGNED USING REDI-ROCK BLOCK DIMENSIONS. ADJUST COPING AND RAIL SPACING ACCORDINGLY.

WISCONSIN
CHAD D. HALVERSON
E-34364
MADISON, WI
PROFESSIONAL ENGINEER

December 13, 2019

LIST OF DRAWINGS

1. GENERAL PLAN
2. TYPICAL SECTION AND DETAILS
3. WALL GEOMETRY AND SOIL PROPERTIES
4. RAILING STEEL PEDESTRIAN TYPE C3
5. RAILING DETAILS
6. SUBSURFACE EXPLORATION

STRUCTURE DESIGN CONTACT
CHAD HALVERSON (608) 663-1218

BENCHMARK TABLE

NO.	STATION	OFFSET	DESCRIPTION	ELEV.
59	574+52.20'SB'	58.73' LT	SOUTH SIDE OF CONCRETE PAD, DQ SIGN	913.42
60	580+02.87'SB'	67.00' LT	EAST CORNER OF CONCRETE BASE TFSM	929.34

KL Engineering
[A] Better Experience
5400 King James Way
Suite 200
Madison, WI. 53719
Phone: (608) 663-1218
Phone: (800)-810-4012
http://klengineering.com
email@klengineering.com

CITY OF FITCHBURG

GENERAL PLAN
R-13-357

Project No:	18013
Date:	7-29-2019
Designed By:	CAH
Drafted By:	STD
Checked By:	CDH

Revisions:

SHEET NO.

1 OF 6

PLOT DATE : 7/23/2019 7:39 AM

PLOT BY : SCOTT DEMEUSE

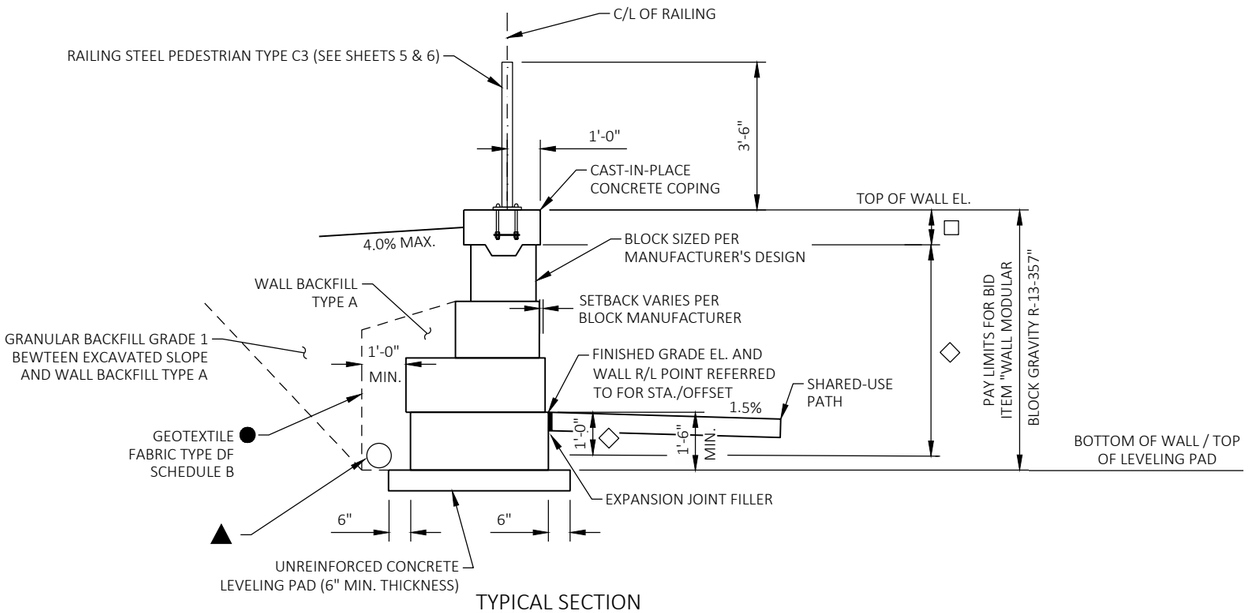

TYPICAL SECTION

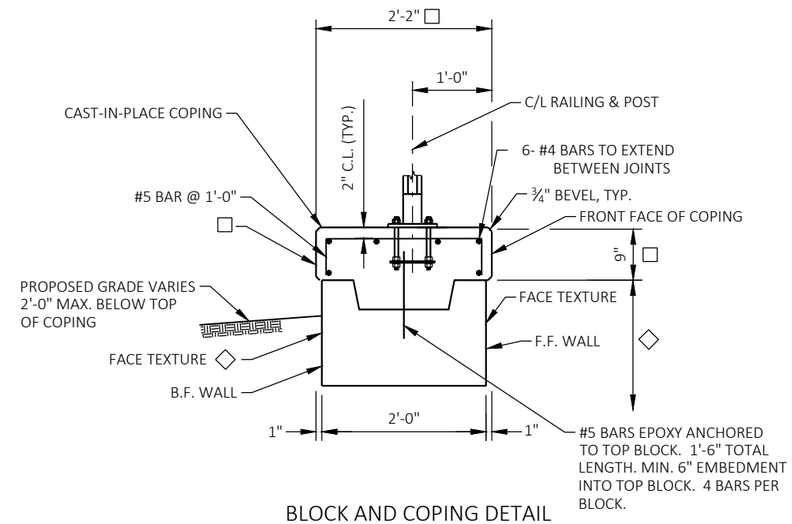

BLOCK AND COPING DETAIL

LEGEND

- ▲ PIPE UNDERDRAIN WRAPPED 6-INCH, SLOPE 0.5% MIN. TO SUITABLE DRAINAGE. ATTACH END CAP AT HIGH END OF PIPE UNDERDRAIN. CONNECT TO STORM SEWER.
- ● GEOTEXTILE FABRIC SHALL COMPLETELY SEPARATE WALL BACKFILL TYPE A FROM BACKFILL ON ALL SIDES.
- □ APPLY CONCRETE STAINING TO ALL COPING FACES. COLOR SHALL BE FEDERAL COLOR NO. 26134.
- ◇ APPLY CONCRETE STAINING FROM TOP BLOCK TO 1'-0" BELOW FINISHED GRADE ELEVATION, FRONT AND BACK FACE OF WALL. COLOR SHALL BE FEDERAL COLOR NO. 33448.
- ▼ SEAL ALL EXPOSED HORIZ. & VERT. SURFACES OF FILLER WITH NON-STAINING GRAY NON-BITUMINOUS JOINT SEALER. (1" DEEP AND HOLD ⅛" BELOW SURFACE OF CONCRETE)

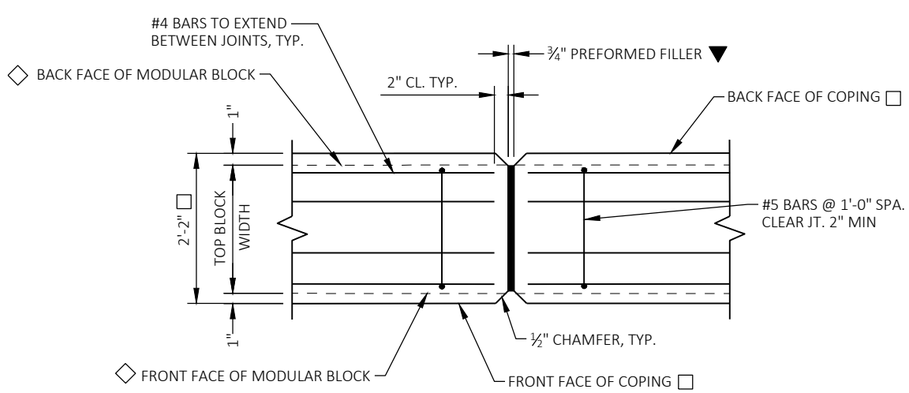

COPING EXPANSION JOINT

DO NOT RUN BAR STEEL THRU JOINT
HORIZ. SPA. OF JOINT = 50'-0"
(SEE SHEET 5 FOR EXPANSION JOINT LOCATIONS)

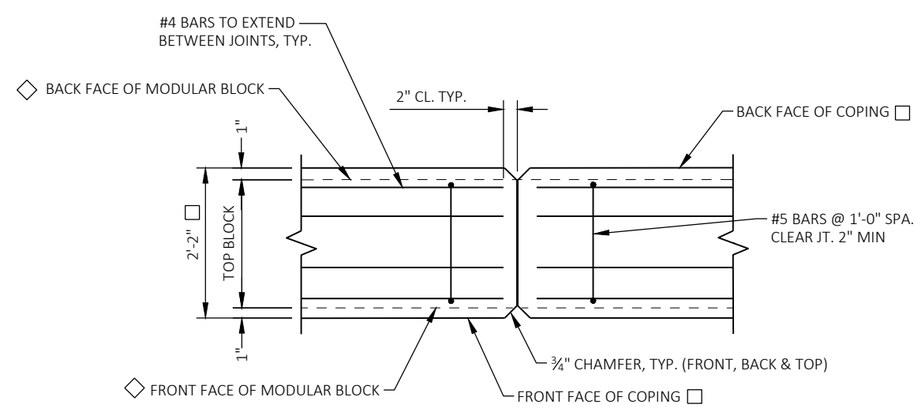

COPING CONTRACTION JOINT

DO NOT RUN BAR STEEL THRU JOINT
HORIZ. SPA. OF JOINT = 12'-0"

KL Engineering
[A] Better Experience
5400 King James Way
Suite 200
Madison, WI. 53719
Phone: (608) 663-1218
Phone: (800)-810-4012
http://klengineering.com
email@klengineering.com

CITY OF FITCHBURG

TYPICAL SECTION AND DETAILS R-13-357

Project No:	19-3488
Date:	OCT 2019
Designed By:	CAH
Drafted By:	STD
Checked By:	CDH

Revisions:

SHEET NO.

2 OF 6

FILE NAME : G:\FITCHBRG\18013-000\CIVIL3D\SHEETSPLAN\STRUCTURES CAD\080602-XS.DWG

PLOT DATE : 7/26/2019 7:57 AM
PLOT BY : SCOTT DEMEUSE
FILE NAME : G:\FITCHBRG\18013-000\CIVIL3D\SHEETSPLAN\STRUCTURES CAD\080603-GN.DWG

SOIL PARAMETERS

*DESIGN WALLS FOR THESE VALUES.

STRATUM LOCATION & SOIL DESIGN	TOTAL UNIT WEIGHT (PCF)	FRACTION ANGLE (DEGREES)	COHESION (PCF)
RETAINED SOIL (GRANULAR BACKFILL) *	135.0	30	0
BORING 12 (STA. 575+55'SB', 58' LT)			
LEAN CLAY (CL) 917.9 FT - 916.4 FT	125.0	0	2,000
SILTY GRAVEL WITH SAND & COBBLES (GM) 916.4 FT - 914.9 FT	125.0	45	0
DOLOMITE 914.9 FT - 908.4 FT	149.0	45	0
BORING 13 (STA. 576+48'SB', 56' LT)			
LEAN CLAY (CL) 921.5 FT - 921.0 FT	125.0	0	500
SILTY GRAVEL WITH SAND & COBBLES (SM) 921.0 FT - 918.0 FT	136.0	33	0
DOLOMITE 918.0 FT - 911.0 FT	149.0	45	0

GEOMETRY TABLE

DESCRIPTION	FHR SB STA	OFFSET	WALL STA	TOP WALL EL	F.F. FINISHED GRADE	B.F. FINISHED GRADE
BEGIN WALL	575+15.78	65.19	40+00.00	918.40	912.04	916.32
	575+33.56	51.52	40+25.00	918.40	912.35	916.79
STEP	575+54.78	51.62	40+46.12	918.40	913.53	918.21
	575+54.78	51.62	40+46.12	919.90	913.53	918.21
	575+58.68	51.63	40+50.00	919.90	913.72	918.33
	575+83.79	51.69	40+75.00	919.90	915.08	919.22
STEP	575+91.46	51.70	40+82.64	919.90	915.48	919.63
	575+91.46	51.70	40+82.64	921.40	915.48	919.63
	576+08.90	51.69	41+00.00	921.40	916.39	920.53
STEP	576+28.14	51.66	41+19.15	921.40	917.37	921.41
	576+28.14	51.66	41+19.15	922.90	917.37	921.41
	576+34.20	51.64	41+25.00	922.90	917.62	921.49
	576+59.13	51.53	41+50.00	922.90	918.88	922.66
	576+79.65	61.86	41+75.00	922.90	921.61	922.29
END WALL	576+80.09	63.52	41+76.71	922.90	921.81	922.25

WALL EXTERNAL & OVERALL STABILITY EVALUATION

RETAINING WALL DIMENSIONS				
WALL CROSS-SECTION STATION	40+42	41+42		
APPLICABLE BORINGS [1]	12	13		
LIVE LOAD SURCHARGE (PSF)	100	100		
DEAD LOAD SURCHARGE (PSF)	0	0		
TOTAL WALL HEIGHT (FT)	6.30	5.23		
EXPOSED WALL HEIGHT (FT)	4.80	3.73		
WALL EMBEDMENT (FT)	1.50	1.50		
BOTTOM BLOCK DEPTH (IN)	45/39	39		
WALL BATTER (DEGREES)[2]	3.6/7.2	3.6/7.2		
RETAINING WALL EXTERNAL STABILITY ANALYSES RESULTS				
SLIDING (CDR > 1.0)	1.8/1.7	1.8/1.9		
ECCENTRICITY (CDR > 1.0)	1.1	1.1/1.6		
GLOBAL STABILITY (CDR > 1.0) [3]	7.5	--		
BEARING RESISTANCE (CDR > 1.0)	3.0	3.0		
REQUIRED BEARING RESISTANCE (PSF)	5100/4900	4200/3400		
SETTLEMENT (IN)	<0.5	<0.5		

NOTES:

[1] IF MORE THAN ONE BORING IS LISTED, THEN THE COMPOSITE SOIL VALUES WERE USED FOR ANALYSES.

[2] THE WALL BATTER IS MEASURED FROM THE VERTICAL.

[3] GLOBAL STABILITY IS ONLY EVALUATED AT THE CRITICAL WALL LOCATION.

CDR = CAPACITY DEMAND RATIO PSF = POUNDS PER SQUARE FOOT

KL Engineering
[A] Better Experience
5400 King James Way
Suite 200
Madison, WI. 53719
Phone: (608) 663-1218
Phone: (800)-810-4012
http://klengineering.com
email@klengineering.com

CITY OF FITCHBURG

WALL GEOMETRY & SOIL PROPERTIES
R-13-357

Project No: 19-3488
Date: OCT 2019
Designed By: CAH
Drafted By: STD
Checked By: CDH

Revisions:

SHEET NO.
3 OF 6

PLOT DATE : 5/8/2019 9:13 AM
PLOT BY : SCOTT DEMEUSE
FILE NAME : G:\FITCHBRG\18013-000\CIVIL3D\SHEETSPLAN\STRUCTURES CAD\080404-WD.DWG

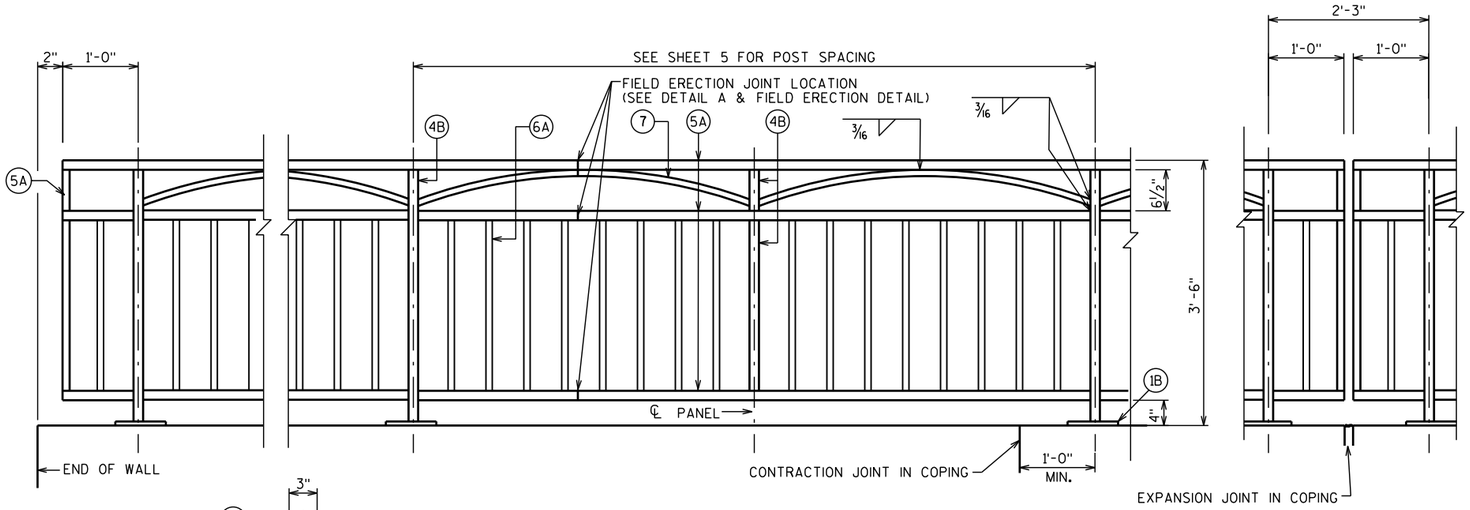

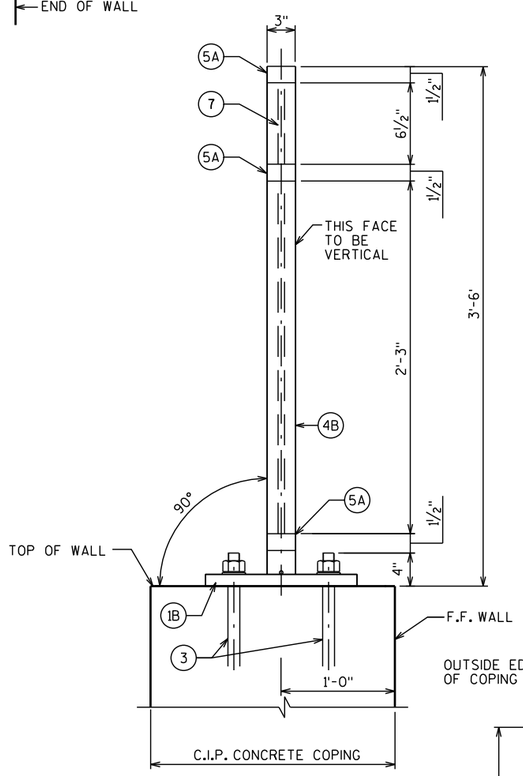

SECTION THRU RAILING

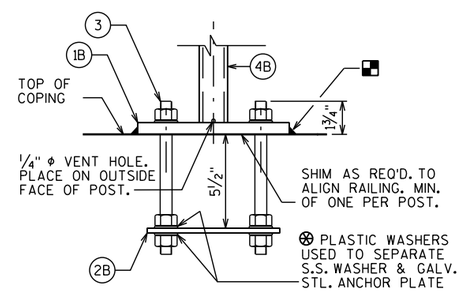

ANCHORAGE FOR RAIL POSTS

NOTE: ANCHOR PLATE NOT REQUIRED WHEN ADHESIVE ANCHORS ARE USED.

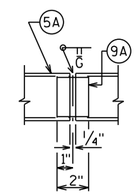

SHOP RAIL SPLICE DETAIL

(LOCATION MUST BE SHOWN ON SHOP DRAWINGS)

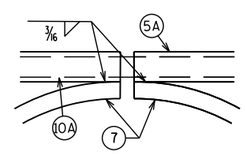

DETAIL A

LEGEND

(1B) PLATE 5/8" X 6" X 10" WITH 3/4" X 1 1/2" SLOTTED HOLES.

(2B) 1/4" X 5" X 9" ANCHOR PLATE WITH 11/16" DIA. HOLE FOR THR'D. RODS NO. 3.

(3) 5/8" DIA. X 9" LONG, TYPE 316 STAINLESS STEEL THREADED RODS (MIN. TENSILE STRENGTH = 70 KSI) WITH NUT AND WASHERS OF SAME ALLOY GROUP. ALTERNATIVE ANCHORAGE: CONCRETE ADHESIVE ANCHORS 5/8-INCH. EMBED 7" IN CONCRETE FOR RAIL POSTS. EMBED 5" IN CONCRETE FOR END RAILS. ADHESIVE ANCHORS SHALL CONFORM TO SECTION 502.2.12 OF THE STANDARD SPECIFICATIONS.

(4B) STRUCTURAL TUBING 3" X 3" X 3/16". PLACE VERTICAL. WELD TO NO. 1 & 5.

(5A) STRUCTURAL TUBING 3" X 1 1/2" X 3/16" RAILS. WELD TO NO. 1 & NO. 4. INSIDE OF TUBE TO BE PAINTED AT ALL FIELD ERECTION & EXPANSION JOINTS.

(6A) BAR 1" X 1" PICKETS. WELD TO NO. 5. (SPACE AT 6" MAX. ℄ TO ℄ SPACING) PLACE VERTICAL.

(7) BAR 1" X 1" BEND TO REQUIRED RADIUS. WELD TO NO. 4B & 5A.

(9A) RECTANGULAR SLEEVE FABRICATED FROM 3/16" PLATES. PROVIDE "SLIDING FIT".

(10A) RECTANGULAR SLEEVE FABRICATED FROM 3/16" PLATES. (1'-4" @ FIELD ERECTION JTS.)

RAILING NOTES

BID ITEM SHALL BE "RAILING STEEL PEDESTRIAN TYPE C3 R-13-357" WHICH SHALL INCLUDE ALL STEEL ITEMS SHOWN.

POST BASE PLATES SHALL BE FLAT WITH ALL SURFACES SMOOTH AND FREE FROM WARP AND ALL EDGES SMOOTH, STRAIGHT AND VERTICAL. ALL PLATE CUTS SHALL BE MACHINE OR MACHINE FLAME CUTS.

ALL PLATES, BARS, AND RECTANGULAR SLEEVES SHALL CONFORM TO ASTM A709 GRADE 36. ALL STRUCTURAL TUBING SHALL CONFORM TO ASTM A500 GRADE B.

ANCHORAGES SHALL BE ACCURATELY PLACED TO PROVIDE CORRECT ALIGNMENT OF RAILING. SET NORMAL TO GRADE.

CUT BOTTOM OF POST TO MAKE POST VERTICAL IN BOTH TRANSVERSE AND LONGITUDINAL DIRECTION.

STEEL SHIMS SHALL BE PROVIDED & USED UNDER BASE PLATES WHERE REQUIRED FOR ALIGNMENT, AND SHALL BE GALVANIZED.

CAULK AROUND PERIMETER OF BASE PLATES, NO. 1, AND FILL BOLT SLOT OPENINGS IN SHIMS AND BASE PLATES WITH NON-STAINING GRAY NON-BITUMINOUS JOINT SEALER.

ALL MATERIAL (EXCEPT NO. 3) SHALL BE GALVANIZED AFTER FABRICATION. PRIOR TO GALVANIZING, THE STEEL RAILING SHALL BE GIVEN A NO. 6 BLAST CLEANING PER SSPC SPECIFICATIONS. PAINT OVER GALVANIZING WITH AN APPROVED TIE COAT AND TOP COAT AS SPECIFIED IN THE CONTRACT DOCUMENTS. THE RAILING SHALL BE PAINTED FEDERAL COLOR NO. 14090.

VENT HOLES SHALL BE DRILLED IN POST AND RAIL MEMBERS AS REQUIRED TO FACILITATE GALVANIZING AND DRAINAGE.

RAILING SHALL BE FABRICATED IN LENGTHS THAT INCLUDE 3 OR 4 POSTS.

TOUCH-UP PAINTING TO BE DONE AT COMPLETION OF STEEL RAILING INSTALLATION TO THE SATISFACTION OF THE ENGINEER AT NO EXTRA COST.

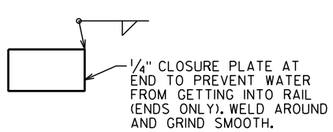

CLOSURE PLUG DETAIL

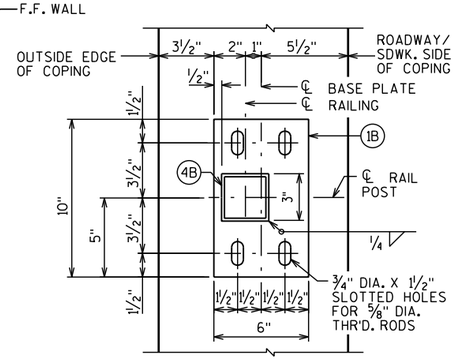

TYPICAL RAIL POST BASE PLATE

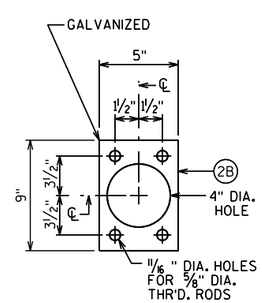

ANCHOR PLATE

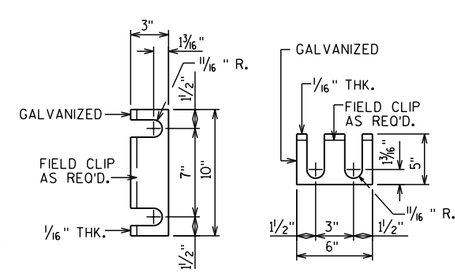

RAIL POST SHIM DETAIL

(2 SETS PER POST)

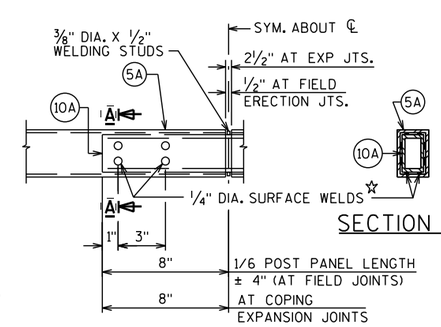

SECTION A-A

FIELD ERECTION JOINT DETAIL

☆ MIN. 5/8" FLAT SURFACE DIA. PUNCHINGS OR STUDS MAY BE USED AS AN ALTERNATE.

KL Engineering
[A] Better Experience
5400 King James Way
Suite 200
Madison, WI. 53719
Phone: (608) 663-1218
Phone: (800)-810-4012
http://klengineering.com
email@klengineering.com

CITY OF FITCHBURG

RAILING STEEL PEDESTRIAN TYPE C3 R-13-357

Project No:	19-3488
Date:	OCT 2019
Designed By:	CDH
Drafted By:	STD
Checked By:	CDH

Revisions:

SHEET NO.

4 OF 6

NOTE:

CONTRACTOR TO VERIFY AND ADJUST RAILING RADIUS TO MATCH TOP OF WALL. WALL BASED ON PROVIDED WALL BATTER. COORDINATE WITH WALL MANUFACTURER.

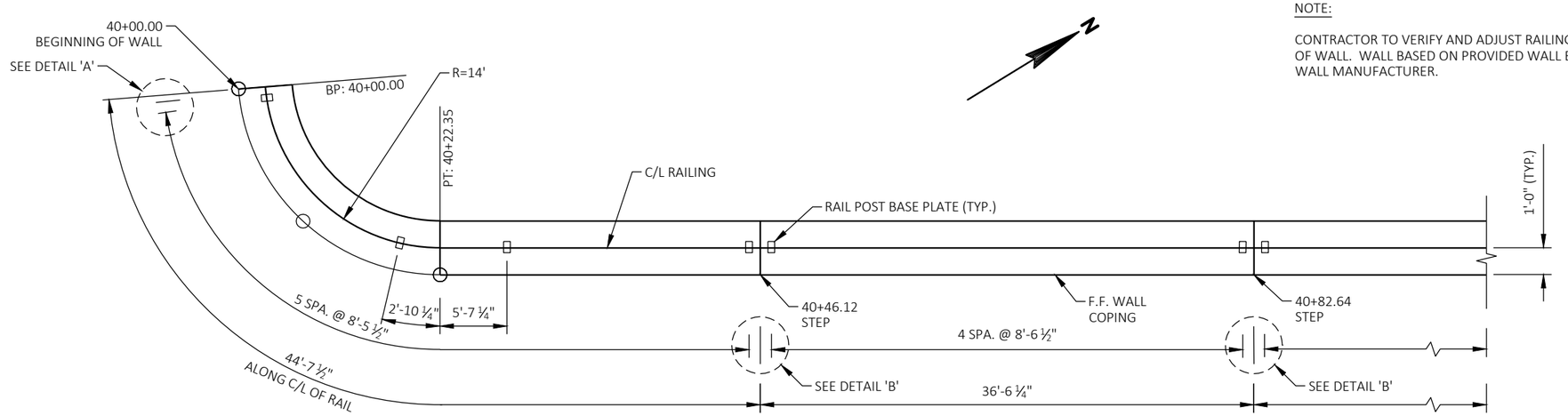

PLAN

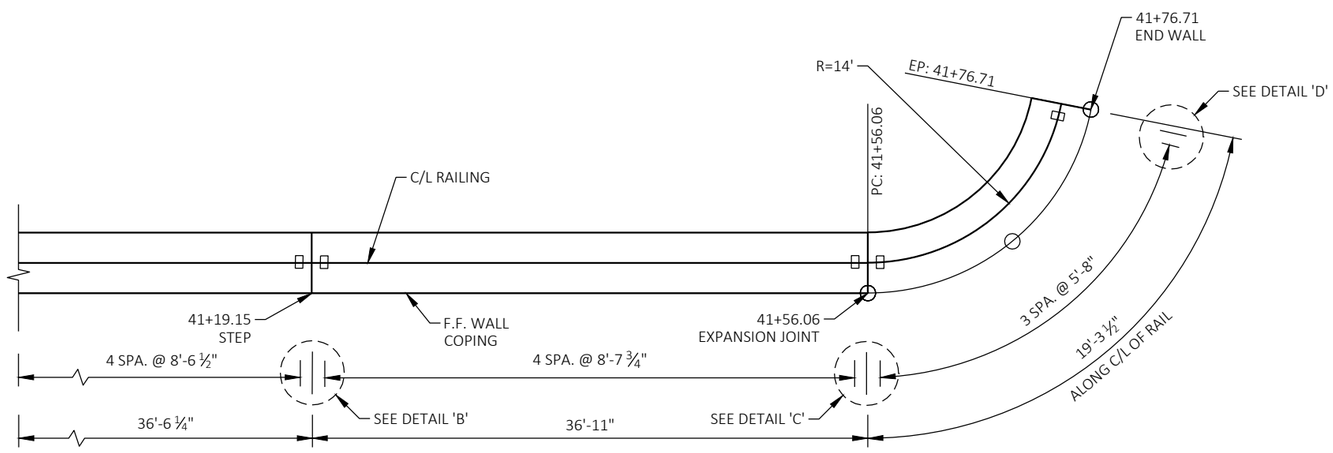

PLAN

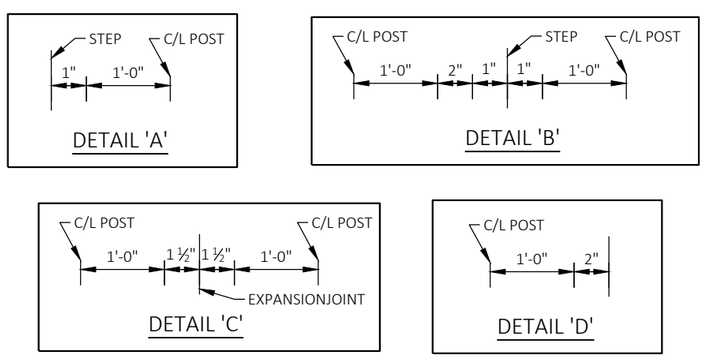

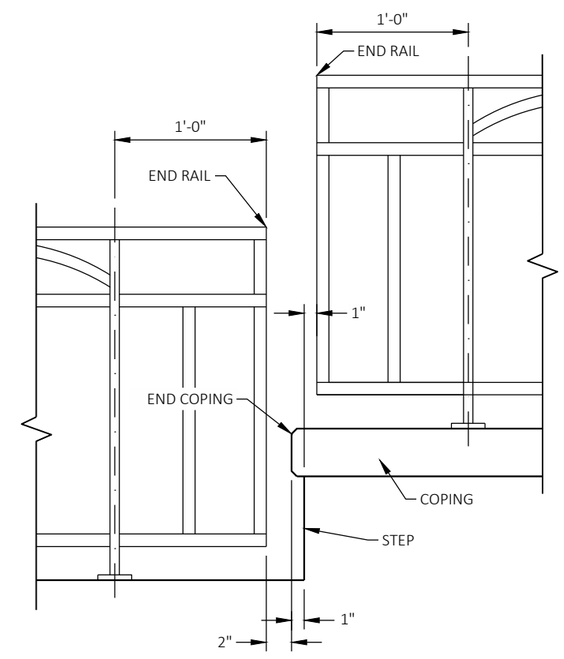

STEP DETAIL

KL Engineering
[A] Better Experience
5400 King James Way
Suite 200
Madison, WI. 53719
Phone: (608) 663-1218
Phone: (800)-810-4012
http://klengineering.com
email@klengineering.com

CITY OF FITCHBURG

RAILING DETAILS
R-13-357

Project No:	19-3488
Date:	OCT 2019
Designed By:	CAH
Drafted By:	STD
Checked By:	CDH

Revisions:

SHEET NO.

5 OF 6

PLOT DATE : 7/26/2019 8:05 AM
PLOT BY : SCOTT DEMEUSE
FILE NAME : G:\FITCHBRG\18013-000\CIVIL3D\SHEETSPLAN\STRUCTURES CAD\080605-RD.DWG

PLOT DATE : 7/26/2019 8:12 AM

PLOT BY : SCOTT DEMEUSE

BORING #	DATE COMPLETED	NORTHING (Y)	EASTING (X)
BORING 12	7/12/2018	464,940.478	813,273.631
BORING 13	7/13/2018	465,024.734	813,327.368
BORINGS COMPLETED BY: SOILS & ENGINEERING SERVICES, INC.			
REPORT COMPLETED BY: SOILS & ENGINEERING SERVICES, INC.			
ALL COORDINATES REFERENCED TO WCCS NAD DANE COUNTY			

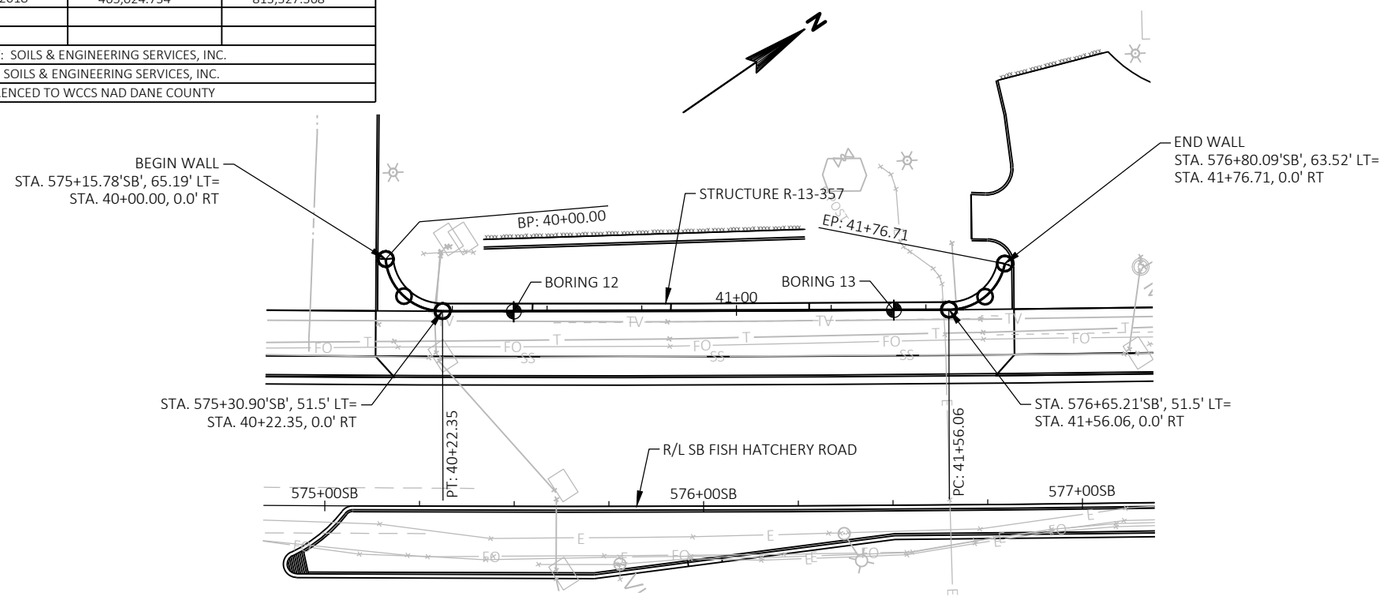

PLAN

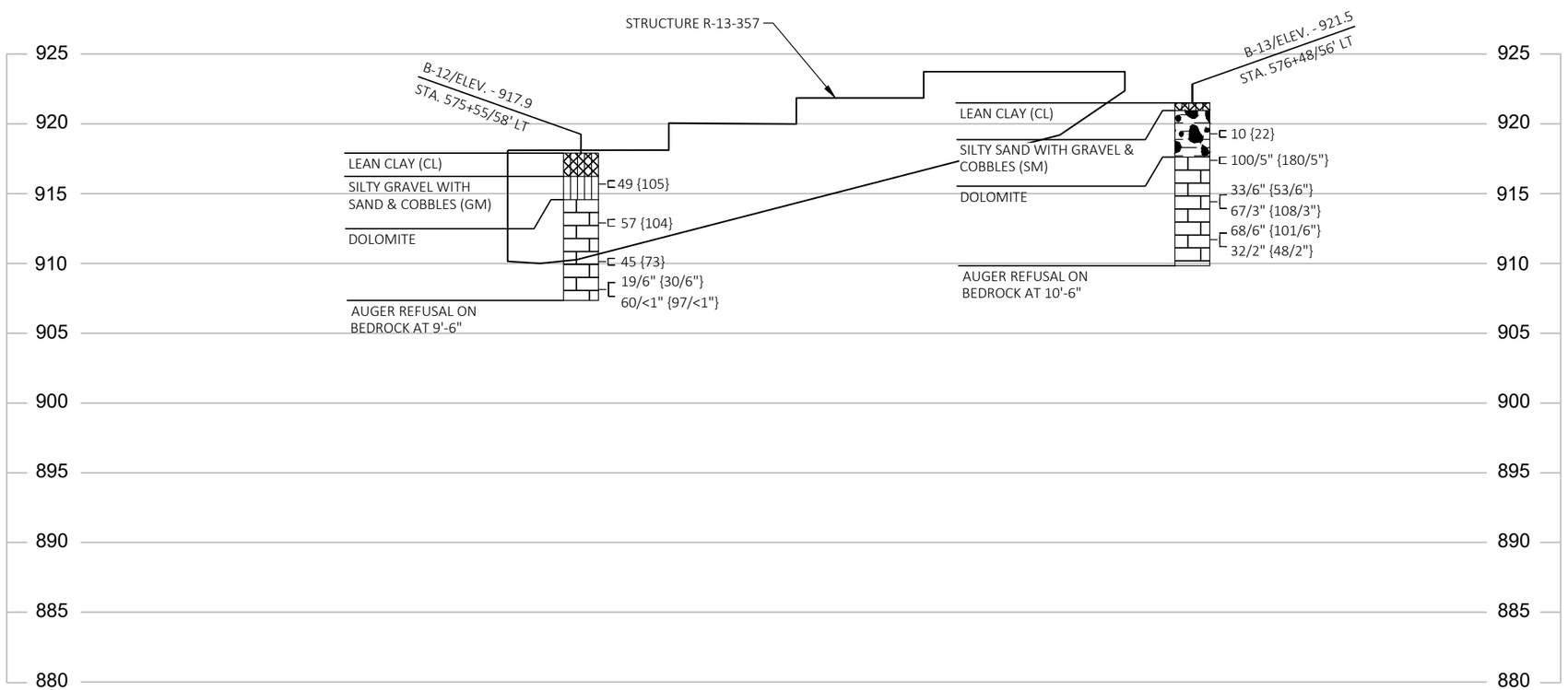

MATERIAL SYMBOLS

ASPHALT	TOPSOIL	PEAT
CONCRETE	FILL	GRAVEL
SAND	CLAY	SILT
BOULDERS OR COBBLES	LIMESTONE	BEDROCK (UNKNOWN)
SHALE	SANDSTONE	IGNEOUS/ META

LEGEND OF BORING

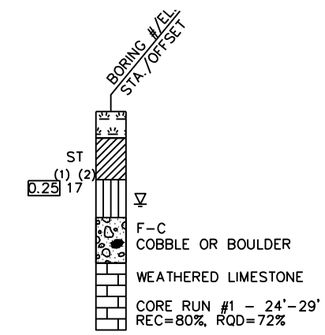

(1) UNCONFINED STRENGTH, AS DETERMINED BY A POCKET PENETROMETER (TSF)

(2) UNLESS OTHERWISE, SPECIFIED THE SPT 'N' VALUE IS BASED ON AASHTO T-206, STANDARD PENETRATION TEST. THE SPT 'N' VALUE PRESENTED HAS NOT BEEN CORRECTED FOR OVERBURDEN PRESSURE OR HAMMER EFFICIENCY.

GROUND WATER ELEVATION

- AT TIME OF DRILLING
- END OF DRILLING
- AFTER DRILLING

ABBREVIATIONS

F-FINE M-MEDIUM C-COARSE ST-SHELBY TUBE

SUBSURFACE EXPLORATION FOR FOUNDATION DESIGN AND BIDDERS INFORMATION

BORINGS WERE COMPLETED AT POINTS APPROXIMATELY AS INDICATED ON THIS DRAWING TO OBTAIN INFORMATION CONCERNING THE CHARACTER OF SUBSURFACE MATERIALS FOUND AT THE SITE. BECAUSE THE INVESTIGATED DEPTHS ARE LIMITED AND THE AREA OF THE BORINGS IS VERY SMALL IN RELATION TO THE ENTIRE SITE, THE WISCONSIN DEPARTMENT OF TRANSPORTATION DOES NOT WARRANT SIMILAR SUBSURFACE CONDITIONS BELOW, BETWEEN, OR BEYOND THESE BORINGS. VARIATIONS IN SOIL CONDITIONS SHOULD BE EXPECTED AND FLUCTUATIONS IN GROUNDWATER LEVELS MAY OCCUR.

KL Engineering
[A] Better Experience
5400 King James Way
Suite 200
Madison, WI. 53719
Phone: (608) 663-1218
Phone: (800)-810-4012
http://klengineering.com
email@klengineering.com

CITY OF FITCHBURG

SUBSURFACE EXPLORATION R-13-357

Project No:	19-3488
Date:	OCT 2019
Designed By:	CAH
Drafted By:	STD
Checked By:	CDH

Revisions:

SHEET NO.

6 OF 6

FILE NAME : G:\FITCHBRG\18013-000\CIVIL3D\SHEETSPLAN\STRUCTURES CAD\080606-SE.DWG

PLOT DATE : 12/13/2019 12:06 PM

PLOT BY : JENNIFER LAUER

FILE NAME : G:\FITCHBRG\18013-000\CIVIL3D\SHEETSPLAN\STRUCTURES CAD\080701-GP.DWG

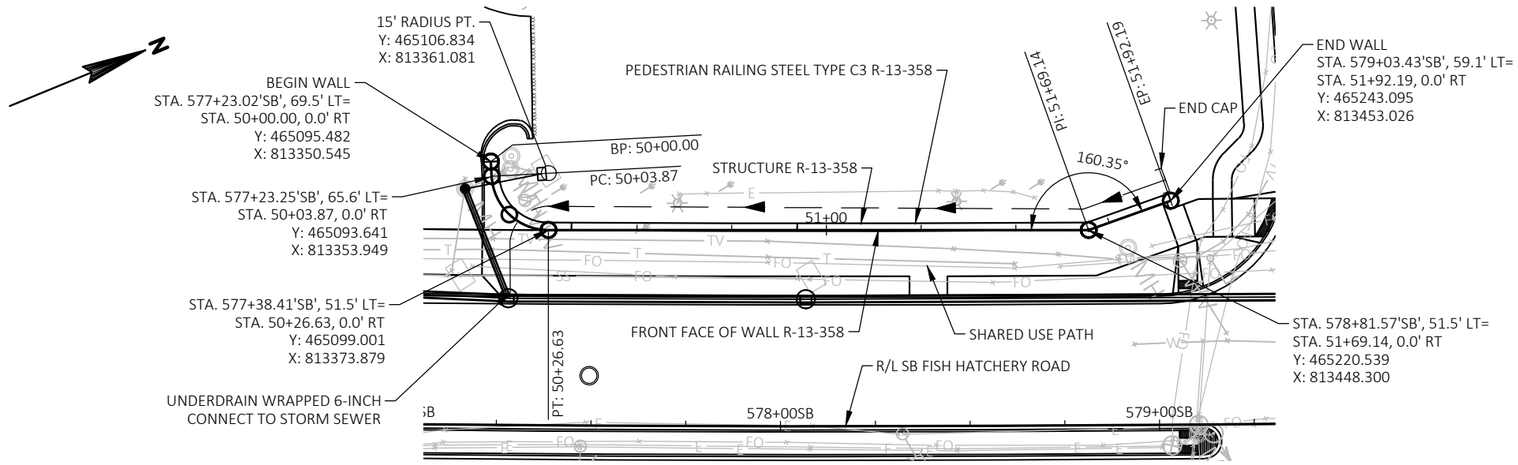

PLAN

(WALL MODULAR BLOCK GRAVITY LRFD, R-13-358)

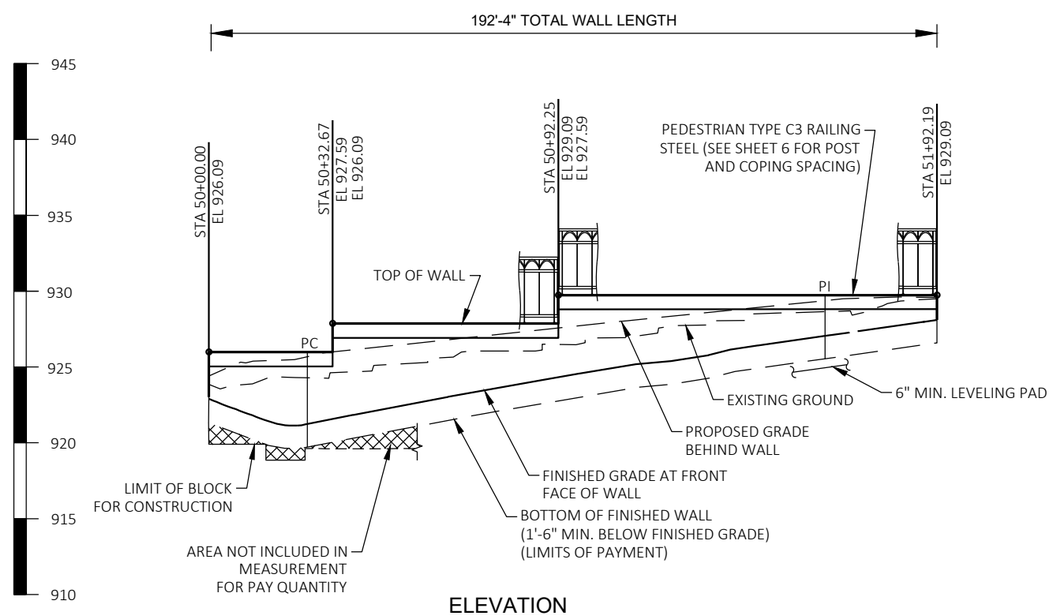

ELEVATION

(LOOKING AT FRONT FACE OF WALL, R-13-358)

TOTAL ESTIMATED QUANTITIES

BID ITEM NO.	BID ITEMS	UNIT	TOTAL
648.2	PIPE UNDERDRAIN WRAPPED 6-INCH	LF	202
902.18.06	RAILING STEEL PEDESTRIAN TYPE C3 R-13-358	LF	190
902.19.06	CONCRETE STAINING R-13-358	SF	1,590
902.20.06	WALL MODULAR BLOCK GRAVITY LRFD, R-13-358	SF	908

GENERAL NOTES

DRAWINGS SHALL NOT BE SCALED

THE PLAN QUANTITY FOR THE BID ITEM "WALL MODULAR BLOCK GRAVITY LRFD R-13-358" IS BASED ON A WALL HEIGHT MEASURED FROM THE TOP OF THE WALL TO A CONSTANT DEPTH OF 1'-6" BELOW FINISHED GRADE.

BLOCK FACE SHALL HAVE THE APPEARANCE OF REDI-ROCK LEDGE STONE OR APPROVED EQUAL. WALL CONCRETE STAINING COLOR TO BE FEDERAL COLOR NO. 33448. COPING CONCRETE STAINING COLOR TO BE FEDERAL COLOR NO. 26134.

EXCAVATION FOR WALL IS INCLUDED WITH ITEM "WALL MODULAR BLOCK GRAVITY LRFD R-13-358".

ALL STATION AND ALL ELEVATIONS ARE IN FEET.

ALL DIMENSIONS AND STATIONING ARE ALONG THE FRONT FACE OF WALL AT FINISHED GROUND, UNLESS SHOWN OTHERWISE.

DESIGN DATA

THE CONTRACTOR SHALL PROVIDE COMPLETE DESIGN, PLANS, DETAILS, SPECIFICATIONS, AND SHOP DRAWINGS FOR THE RETAINING WALLS IN ACCORDANCE WITH THE SPECIAL PROVISIONS. THE RETAINING WALL MANUFACTURER SHALL PROVIDE TECHNICAL ASSISTANCE TO THE CONTRACTOR DURING CONSTRUCTION. THE COST OF FURNISHING THESE ITEMS SHALL BE INCLUDED IN THE BID ITEM "WALL MODULAR BLOCK GRAVITY LRFD R-13-358".

PLANS, ELEVATIONS AND DETAILS SHOWN ON THESE DRAWINGS ARE INTENDED TO INDICATE WALL LOCATIONS, LENGTHS, HEIGHTS, AND DETAILS COMMON TO THE WALL SYSTEM SELECTED. THE CONTRACTOR SHALL VERIFY THAT THE WALL SYSTEM SELECTED WILL CONFORM TO THE REQUIRED ALIGNMENTS AND DETAILS.

THE RETAINING WALL IS TO BE DESIGNED USING ELEVATIONS GIVEN ON THIS SHEET AND IN THE GEOMETRY TABLE ON SHEET 3.

DESIGN FOR RETAINING WALL TO PROVIDE FOR FINISHED GRADE SLOPED BEHIND WALL AS SHOWN ON THE TYPICAL WALL SECTION AND ROADWAY CROSS SECTIONS.

DESIGN RETAINING WALL FOR A LIVE LOAD OF 100 PSF.

CONTRACTOR TO VERIFY STEP LOCATIONS BASED ON BLOCK LENGTHS USED. WALL WAS DESIGNED USING REDI-ROCK BLOCK DIMENSIONS. ADJUST COPING AND RAIL SPACING ACCORDINGLY.

LIST OF DRAWINGS

1. GENERAL PLAN
2. TYPICAL SECTIONS AND DETAILS
3. WALL GEOMETRY AND SOIL PROPERTIES
4. RAILING STEEL PEDESTRIAN TYPE C3
5. RAILING DETAILS
6. SUBSURFACE EXPLORATION

WISCONSIN
CHAD D. HALVERSON
E-34364
MADISON, WI
PROFESSIONAL ENGINEER

December 13, 2019

STRUCTURE DESIGN CONTACT
CHAD HALVERSON (608) 663-1218

BENCHMARK TABLE

NO.	STATION	OFFSET	DESCRIPTION	ELEV.
59	574+52.20'SB'	58.73' LT	SOUTH SIDE OF CONCRETE PAD, DQ SIGN	913.42
60	580+02.87'SB'	67.00' LT	EAST CORNER OF CONCRETE BASE TFSM	929.34

KL Engineering
[A] Better Experience
5400 King James Way
Suite 200
Madison, WI. 53719
Phone: (608) 663-1218
Phone: (800)-810-4012
http://klengineering.com
email@klengineering.com

CITY OF FITCHBURG

GENERAL PLAN R-13-358

Project No: 18013
Date: 7-29-2019
Designed By: CAH
Drafted By: STD
Checked By: CDH

Revisions:

SHEET NO.

1 OF 6

PLOT DATE : 7/22/2019 2:29 PM
PLOT BY : SCOTT DEMEUSE
FILE NAME : G:\FITCHBRG\18013-000\CIVIL3D\SHEETSPLAN\STRUCTURES CAD\080702-XS.DWG

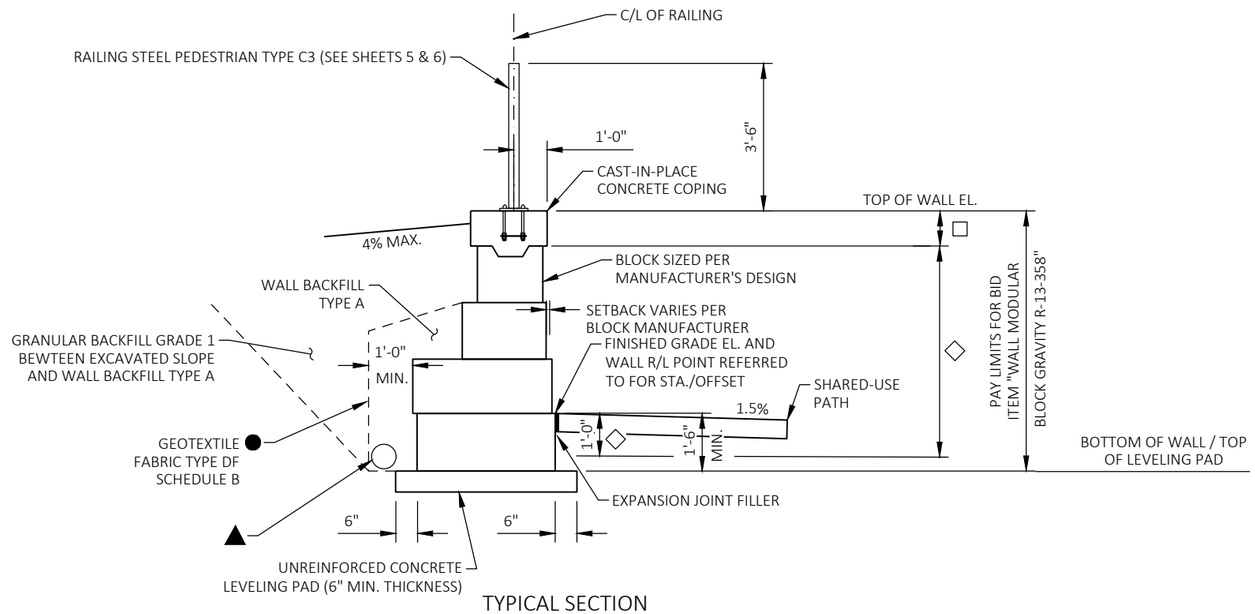

TYPICAL SECTION

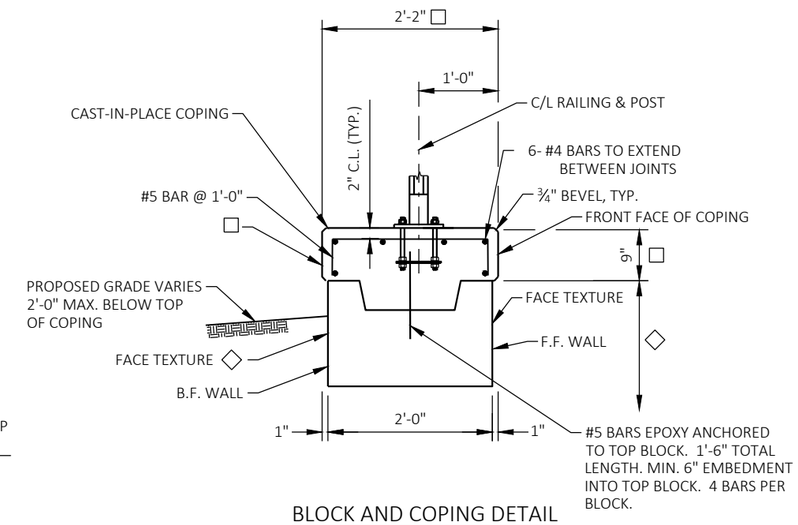

BLOCK AND COPING DETAIL

LEGEND

- ▲ PIPE UNDERDRAIN WRAPPED 6-INCH, SLOPE 0.5% MIN. TO SUITABLE DRAINAGE. ATTACH END CAP AT HIGH END OF PIPE UNDERDRAIN. CONNECT TO STORM SEWER.
- ● GEOTEXTILE FABRIC SHALL COMPLETELY SEPARATE WALL BACKFILL TYPE A FROM BACKFILL ON ALL SIDES.
- □ APPLY CONCRETE STAINING TO ALL COPING FACES. COLOR SHALL BE FEDERAL COLOR NO. 26134.
- ◇ APPLY CONCRETE STAINING FROM TOP BLOCK TO 1'-0" BELOW FINISHED GRADE ELEVATION, FRONT AND BACK FACE OF WALL. COLOR SHALL BE FEDERAL COLOR NO. 33448.
- ▼ SEAL ALL EXPOSED HORIZ. & VERT. SURFACES OF FILLER WITH NON-STAINING GRAY NON-BITUMINOUS JOINT SEALER. (1" DEEP AND HOLD ⅛" BELOW SURFACE OF CONCRETE)

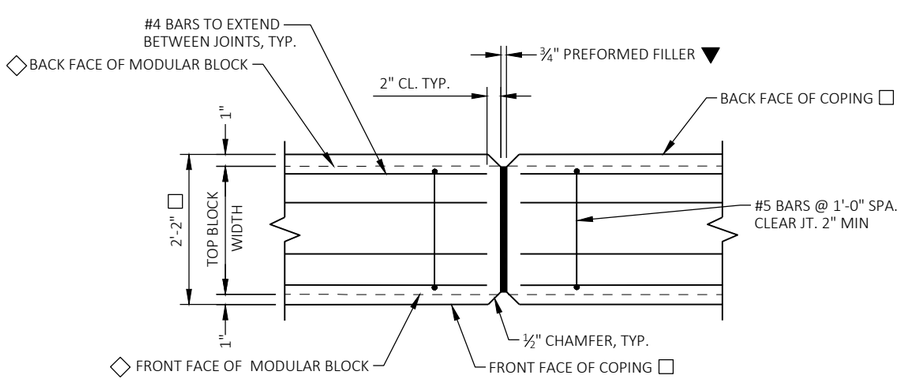

COPING EXPANSION JOINT

DO NOT RUN BAR STEEL THRU JOINT
HORIZ. SPA. OF JOINT = 50'-0"
(SEE SHEET 5 FOR EXPANSION JOINT LOCATIONS)

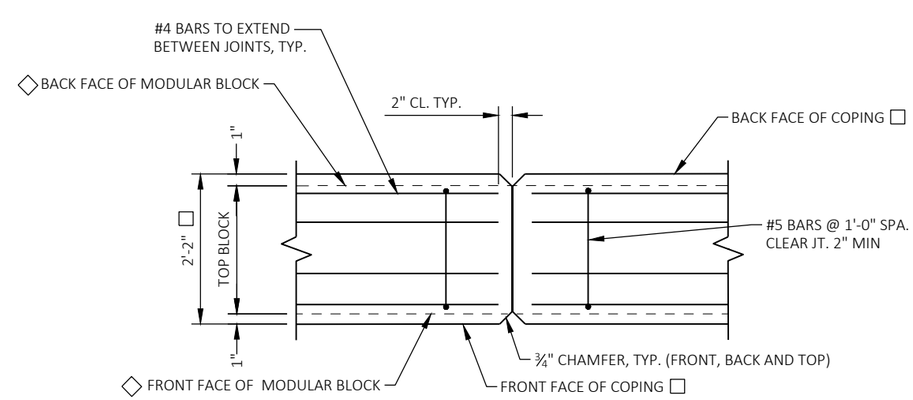

COPING CONTRACTION JOINT

DO NOT RUN BAR STEEL THRU JOINT
HORIZ. SPA. OF JOINT = 12'-0"

KL Engineering
[A] Better Experience
5400 King James Way
Suite 200
Madison, WI. 53719
Phone: (608) 663-1218
Phone: (800)-810-4012
http://klengineering.com
email@klengineering.com

CITY OF FITCHBURG

TYPICAL SECTION AND DETAILS R-13-358

Project No:	19-3488
Date:	OCT 2019
Designed By:	CAH
Drafted By:	STD
Checked By:	CDH

Revisions:

SHEET NO.

2 OF 6

PLOT DATE : 7/26/2019 6:46 AM
PLOT BY : SCOTT DEMEUSE
FILE NAME : G:\FITCHBRG\18013-000\CIVIL3D\SHEETSPLAN\STRUCTURES CAD\080703-GN.DWG

SOIL PARAMETERS

*DESIGN WALLS FOR THESE VALUES.

STRATUM LOCATION & SOIL DESIGN	TOTAL UNIT WEIGHT (PCF)	FRACTION ANGLE (DEGREES)	COHESION (PCF)
RETAINED SOIL (GRANULAR BACKFILL) *	135.0	30	0
BORING 14 (STA. 577+32, 62' LT)			
LEAN CLAY (CL) 925.4 FT - 925.0 FT	125.0	0	500
SILTY GRAVEL WITH SAND (GM/SM) 925.0 FT - 923.4 FT	125.0	31	0
SILTY GRAVEL WITH SAND & COBBLES (SM) 923.4 FT - 916.4 FT	135.0	31	0
DOLOMITE 916.4 FT - 916.2 FT	149.0	45	0
BORING 15 (STA. 578+52, 60' LT)			
LEAN CLAY (CL) 928.2 FT - 927.9 FT	125.0	0	500
LEAN CLAY (CL) 927.9 FT - 926.7 FT	129.0	0	1,000
LEAN CLAY (CL) 926.7 FT - 925.7 FT	133.0	0	4,500
POORLY-GRADED SAND WITH SILT (SP-SM) 925.7 FT - 922.7 FT	125.0	35	0
SILTY GRAVEL WITH SAND & COBBLES (SM) 922.7 FT - 918.2 FT	135.0	33	0

WALL EXTERNAL & OVERALL STABILITY EVALUATION

RETAINING WALL DIMENSIONS				
WALL CROSS-SECTION STATION	50+28	51+28		
APPLICABLE BORINGS [1]	14	15		
LIVE LOAD SURCHARGE (PSF)	100	100		
DEAD LOAD SURCHARGE (PSF)	0	0		
TOTAL WALL HEIGHT (FT)	5.21	3.70		
EXPOSED WALL HEIGHT (FT)	3.71	2.20		
WALL EMBEDMENT (FT)	1.50	1.50		
BOTTOM BLOCK DEPTH (IN)	39	39		
WALL BATTER (DEGREES)[2]	3.6/7.2	3.6/7.2		
RETAINING WALL EXTERNAL STABILITY ANALYSES RESULTS				
SLIDING (CDR > 1.0)	1.1	1.6/1.7		
ECCENTRICITY (CDR > 1.0)	1.2/1.6	2.1/3.2		
GLOBAL STABILITY (CDR > 1.0) [3]	7.6	--		
BEARING RESISTANCE (CDR > 1.0)	1.3/2.0	3.0		
REQUIRED BEARING RESISTANCE (PSF)	1800/2300	2300/2000		
SETTLEMENT (IN)	<0.5	<0.5		

NOTES:

[1] IF MORE THAN ONE BORING IS LISTED, THEN THE COMPOSITE SOIL VALUES WERE USED FOR ANALYSES.

[2] THE WALL BATTER IS MEASURED FROM THE VERTICAL.

[3] GLOBAL STABILITY IS ONLY EVALUATED AT THE CRITICAL WALL LOCATION.

CDR = CAPACITY DEMAND RATIO PSF = POUNDS PER SQUARE FOOT

GEOMETRY TABLE

DESCRIPTION	FHR SB STA	OFFSET	WALL STA	TOP WALL EL	F.F. FINISHED GRADE	B.F. FINISHED GRADE
BEGIN WALL	577+23.02	69.46	50+00.00	926.09	923.62	924.82
	577+36.77	51.58	50+25.00	926.09	922.25	925.75
STEP	577+44.48	51.54	50+32.67	926.09	922.55	926.09
	577+44.48	51.54	50+32.67	927.59	922.55	926.09
	577+61.88	51.62	50+50.00	927.59	923.23	926.40
	577+87.00	51.70	50+75.00	927.59	924.18	926.93
STEP	578+04.33	51.72	50+92.25	927.59	924.75	927.30
	578+04.33	51.72	50+92.25	929.09	924.75	927.30
	578+12.11	51.72	51+00.00	929.09	925.03	927.47
	578+37.22	51.69	51+25.00	929.09	925.73	928.07
	578+62.34	51.60	51+50.00	929.09	926.58	928.57
	578+87.12	53.43	51+75.00	929.09	927.29	928.94
END WALL	579+03.43	59.09	51+92.19	929.09	927.78	928.97

KL Engineering
[A] Better Experience
5400 King James Way
Suite 200
Madison, WI. 53719
Phone: (608) 663-1218
Phone: (800)-810-4012
http://klengineering.com
email@klengineering.com

CITY OF FITCHBURG

WALL GEOMETRY & SOIL PROPERTIES
R-13-358

Project No: 19-3488
Date: OCT 2019
Designed By: CAH
Drafted By: STD
Checked By: CDH

Revisions:

SHEET NO.
3 OF 6

PLOT DATE : 5/8/2019 9:13 AM
PLOT BY : SCOTT DEMEUSE
FILE NAME : G:\FITCHBRG\18013-000\CIVIL3D\SHEETSPLAN\STRUCTURES CAD\DGN SHEETS\080704-CR.DGN

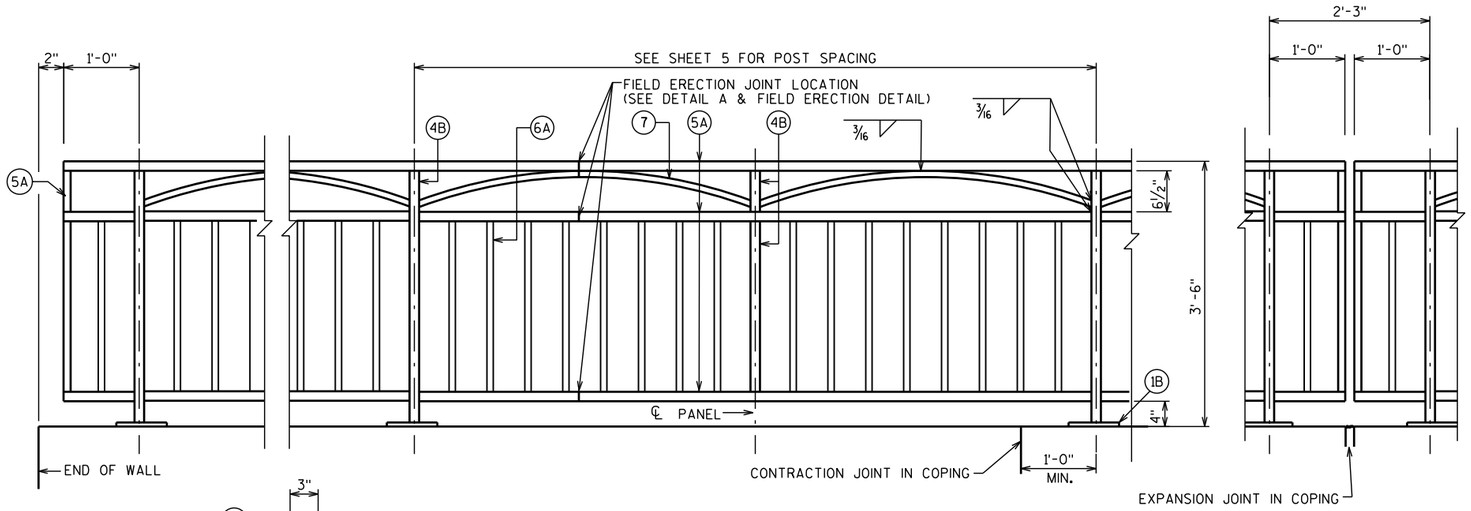

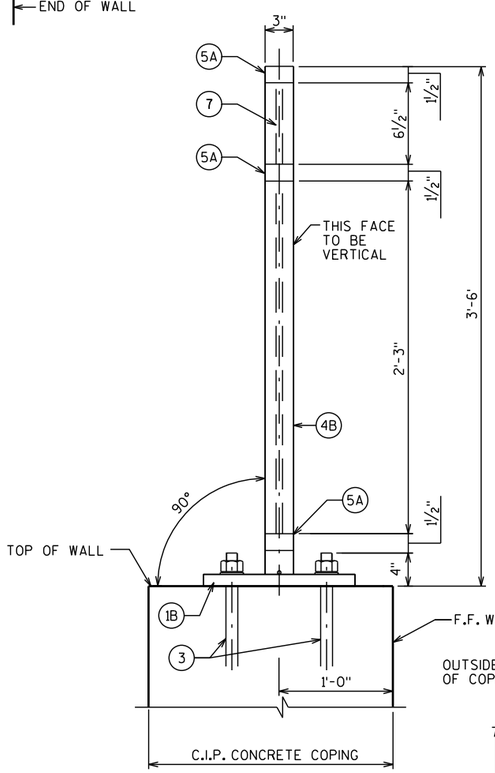

SECTION THRU RAILING

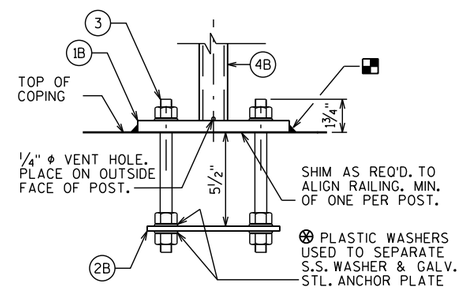

ANCHORAGE FOR RAIL POSTS

NOTE: ANCHOR PLATE NOT REQUIRED WHEN ADHESIVE ANCHORS ARE USED.

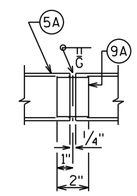

SHOP RAIL SPLICE DETAIL

(LOCATION MUST BE SHOWN ON SHOP DRAWINGS)

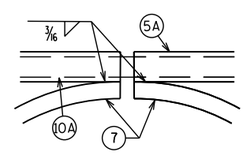

DETAIL A

LEGEND

(1B) PLATE 5/8" X 6" X 10" WITH 3/4" X 1 1/2" SLOTTED HOLES.

(2B) 1/4" X 5" X 9" ANCHOR PLATE WITH 11/16" DIA. HOLE FOR THR'D. RODS NO. 3.

(3) 5/8" DIA. X 9" LONG, TYPE 316 STAINLESS STEEL THREADED RODS (MIN. TENSILE STRENGTH = 70 KSI) WITH NUT AND WASHERS OF SAME ALLOY GROUP. ALTERNATIVE ANCHORAGE: CONCRETE ADHESIVE ANCHORS 5/8-INCH. EMBED 7" IN CONCRETE FOR RAIL POSTS. EMBED 5" IN CONCRETE FOR END RAILS. ADHESIVE ANCHORS SHALL CONFORM TO SECTION 502.2.12 OF THE STANDARD SPECIFICATIONS.

(4B) STRUCTURAL TUBING 3" X 3" X 3/16". PLACE VERTICAL. WELD TO NO. 1 & 5.

(5A) STRUCTURAL TUBING 3" X 1 1/2" X 3/16" RAILS. WELD TO NO. 1 & NO. 4. INSIDE OF TUBE TO BE PAINTED AT ALL FIELD ERECTION & EXPANSION JOINTS.

(6A) BAR 1" X 1" PICKETS. WELD TO NO. 5. (SPACE AT 6" MAX. ℄ TO ℄ SPACING) PLACE VERTICAL.

(7) BAR 1" X 1" BEND TO REQUIRED RADIUS. WELD TO NO. 4B & 5A.

(9A) RECTANGULAR SLEEVE FABRICATED FROM 3/16" PLATES. PROVIDE "SLIDING FIT".

(10A) RECTANGULAR SLEEVE FABRICATED FROM 3/16" PLATES. (1'-4" @ FIELD ERECTION JTS.)

RAILING NOTES

BID ITEM SHALL BE "RAILING STEEL PEDESTRIAN TYPE C3 R-13-358" WHICH SHALL INCLUDE ALL STEEL ITEMS SHOWN.

POST BASE PLATES SHALL BE FLAT WITH ALL SURFACES SMOOTH AND FREE FROM WARP AND ALL EDGES SMOOTH, STRAIGHT AND VERTICAL. ALL PLATE CUTS SHALL BE MACHINE OR MACHINE FLAME CUTS.

ALL PLATES, BARS, AND RECTANGULAR SLEEVES SHALL CONFORM TO ASTM A709 GRADE 36. ALL STRUCTURAL TUBING SHALL CONFORM TO ASTM A500 GRADE B.

ANCHORAGES SHALL BE ACCURATELY PLACED TO PROVIDE CORRECT ALIGNMENT OF RAILING. SET NORMAL TO GRADE.

CUT BOTTOM OF POST TO MAKE POST VERTICAL IN BOTH TRANSVERSE AND LONGITUDINAL DIRECTION.

STEEL SHIMS SHALL BE PROVIDED & USED UNDER BASE PLATES WHERE REQUIRED FOR ALIGNMENT, AND SHALL BE GALVANIZED.

CAULK AROUND PERIMETER OF BASE PLATES, NO. 1, AND FILL BOLT SLOT OPENINGS IN SHIMS AND BASE PLATES WITH NON-STAINING GRAY NON-BITUMINOUS JOINT SEALER.

ALL MATERIAL (EXCEPT NO. 3) SHALL BE GALVANIZED AFTER FABRICATION. PRIOR TO GALVANIZING, THE STEEL RAILING SHALL BE GIVEN A NO. 6 BLAST CLEANING PER SSPC SPECIFICATIONS. PAINT OVER GALVANIZING WITH AN APPROVED TIE COAT AND TOP COAT AS SPECIFIED IN THE CONTRACT DOCUMENTS. THE RAILING SHALL BE PAINTED FEDERAL COLOR NO. 14090.

VENT HOLES SHALL BE DRILLED IN POST AND RAIL MEMBERS AS REQUIRED TO FACILITATE GALVANIZING AND DRAINAGE.

RAILING SHALL BE FABRICATED IN LENGTHS THAT INCLUDE 3 OR 4 POSTS.

TOUCH-UP PAINTING TO BE DONE AT COMPLETION OF STEEL RAILING INSTALLATION TO THE SATISFACTION OF THE ENGINEER AT NO EXTRA COST.

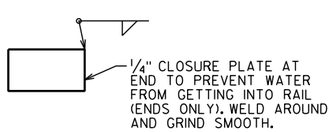

CLOSURE PLUG DETAIL

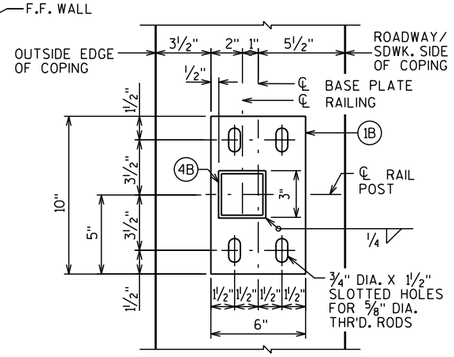

TYPICAL RAIL POST BASE PLATE

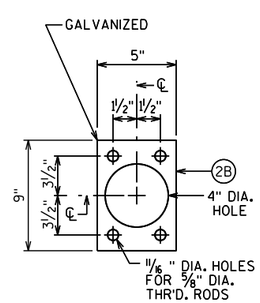

ANCHOR PLATE

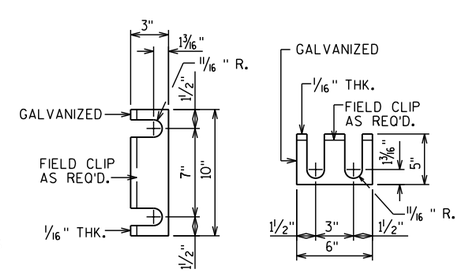

RAIL POST SHIM DETAIL

(2 SETS PER POST)

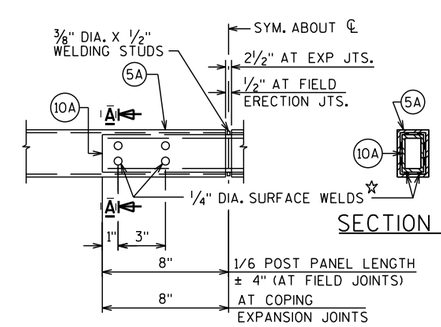

SECTION A-A

FIELD ERECTION JOINT DETAIL

☆ MIN. 5/8" FLAT SURFACE DIA. PUNCHINGS OR STUDS MAY BE USED AS AN ALTERNATE.

KL Engineering
[A] Better Experience
5400 King James Way
Suite 200
Madison, WI. 53719
Phone: (608) 663-1218
Phone: (800)-810-4012
http://klengineering.com
email@klengineering.com

CITY OF FITCHBURG

RAILING STEEL PEDESTRIAN TYPE C3 R-13-358

Project No:	19-3488
Date:	OCT 2019
Designed By:	CDH
Drafted By:	STD
Checked By:	CDH

Revisions:

SHEET NO.

4 OF 6

NOTE:

CONTRACTOR TO VERIFY AND ADJUST RAILING RADIUS TO MATCH TOP OF WALL. WALL BASED ON PROVIDED WALL BATTER. COORDINATE WITH WALL MANUFACTURER.

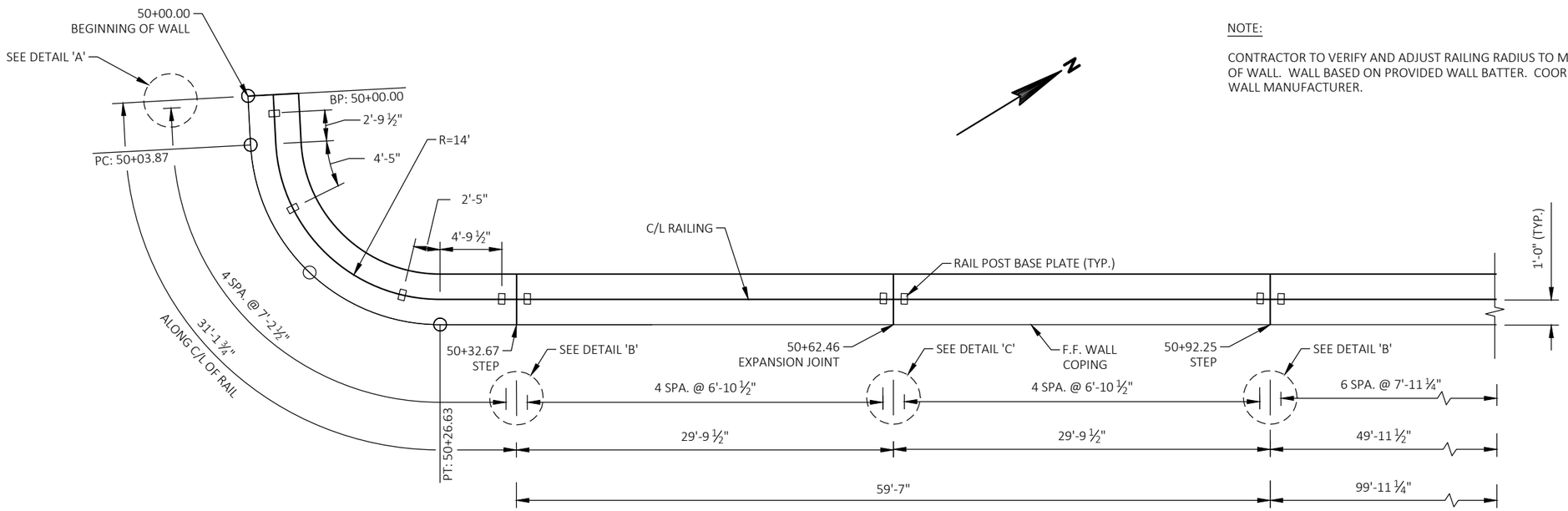

PLAN

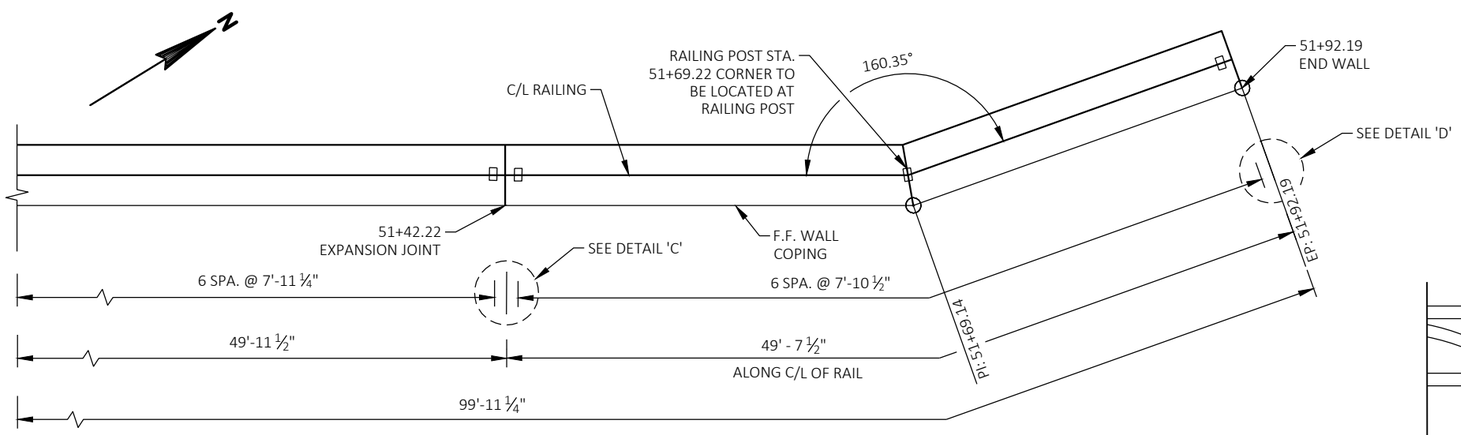

PLAN

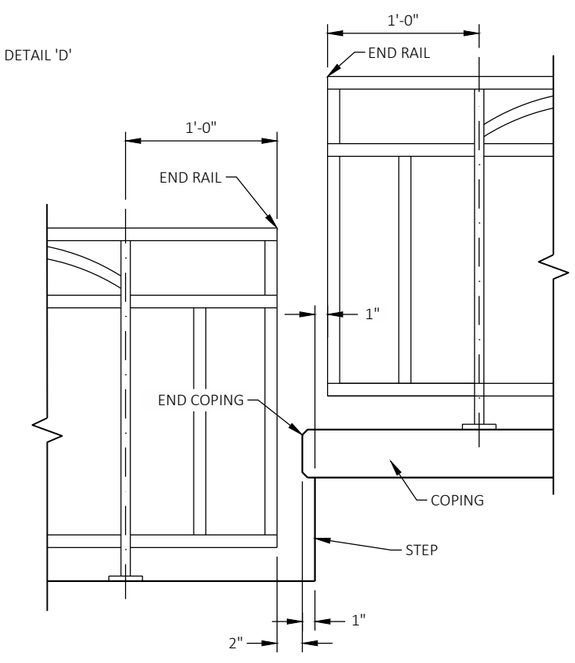

STEP DETAIL

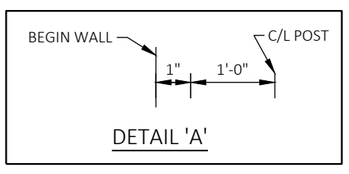

DETAIL 'A'

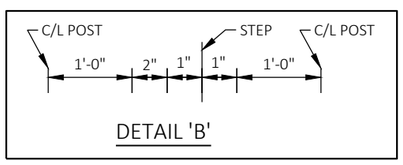

DETAIL 'B'

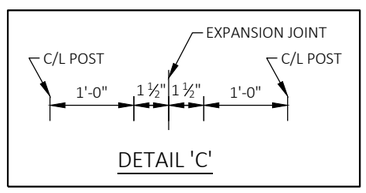

DETAIL 'C'

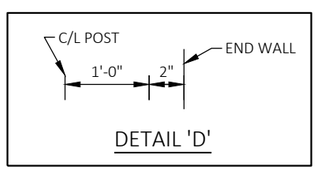

DETAIL 'D'

KL Engineering
[A] Better Experience
5400 King James Way
Suite 200
Madison, WI. 53719
Phone: (608) 663-1218
Phone: (800)-810-4012
http://klengineering.com
email@klengineering.com

CITY OF FITCHBURG

RAILING DETAILS
R-13-358

Project No:	19-3488
Date:	OCT 2019
Designed By:	CAH
Drafted By:	STD
Checked By:	CDH

Revisions:

SHEET NO.

5 OF 6

PLOT DATE : 7/26/2019 3:41 PM
PLOT BY : COLE HERNIKL
FILE NAME : G:\FITCHBRG\18013-000\CIVIL3D\SHEETSPLAN\STRUCTURES CAD\080705-RD.DWG

PLOT DATE : 7/26/2019 6:57 AM

PLOT BY : SCOTT DEMEUSE

BORING #	DATE COMPLETED	NORTHING (Y)	EASTING (X)
BORING 14	7/13/2018	465,100.320	813,374.698
BORING 15	7/13/2018	465,185.091	813,426.810
BORINGS COMPLETED BY: SOILS & ENGINEERING SERVICES, INC.			
REPORT COMPLETED BY: SOILS & ENGINEERING SERVICES, INC. 7/01/2019			
ALL COORDINATES REFERENCED TO WCCS NAD DANE COUNTY			

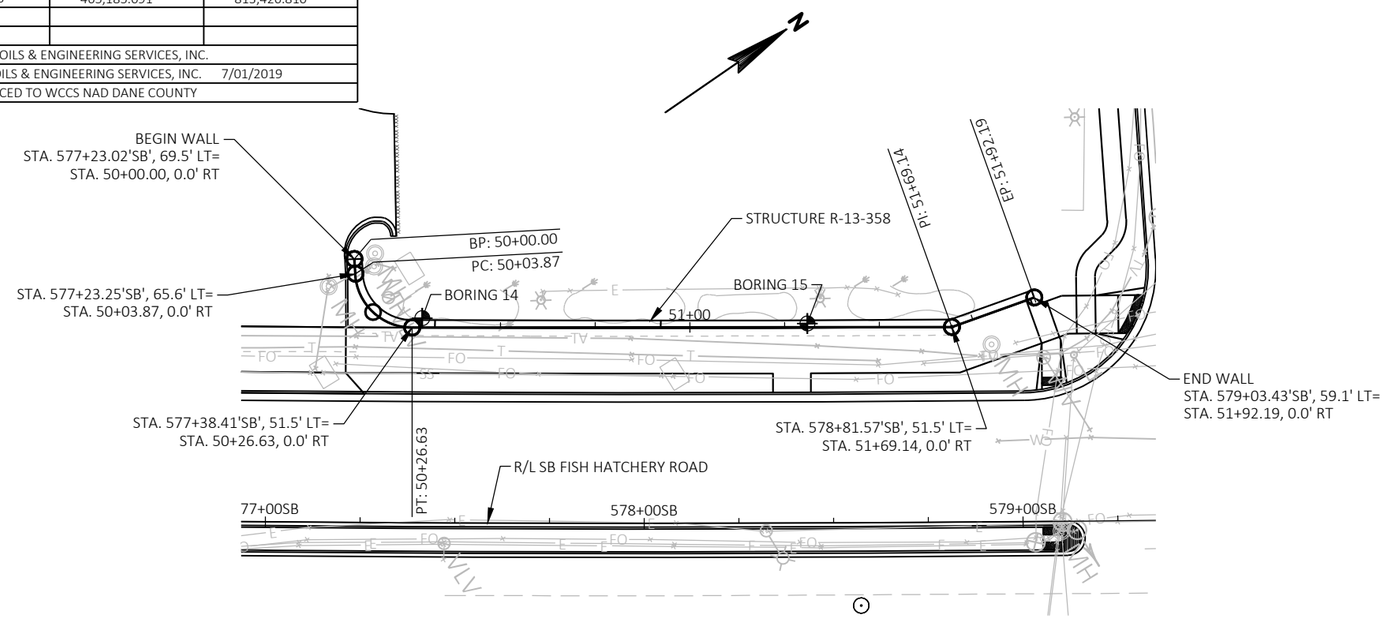

PLAN

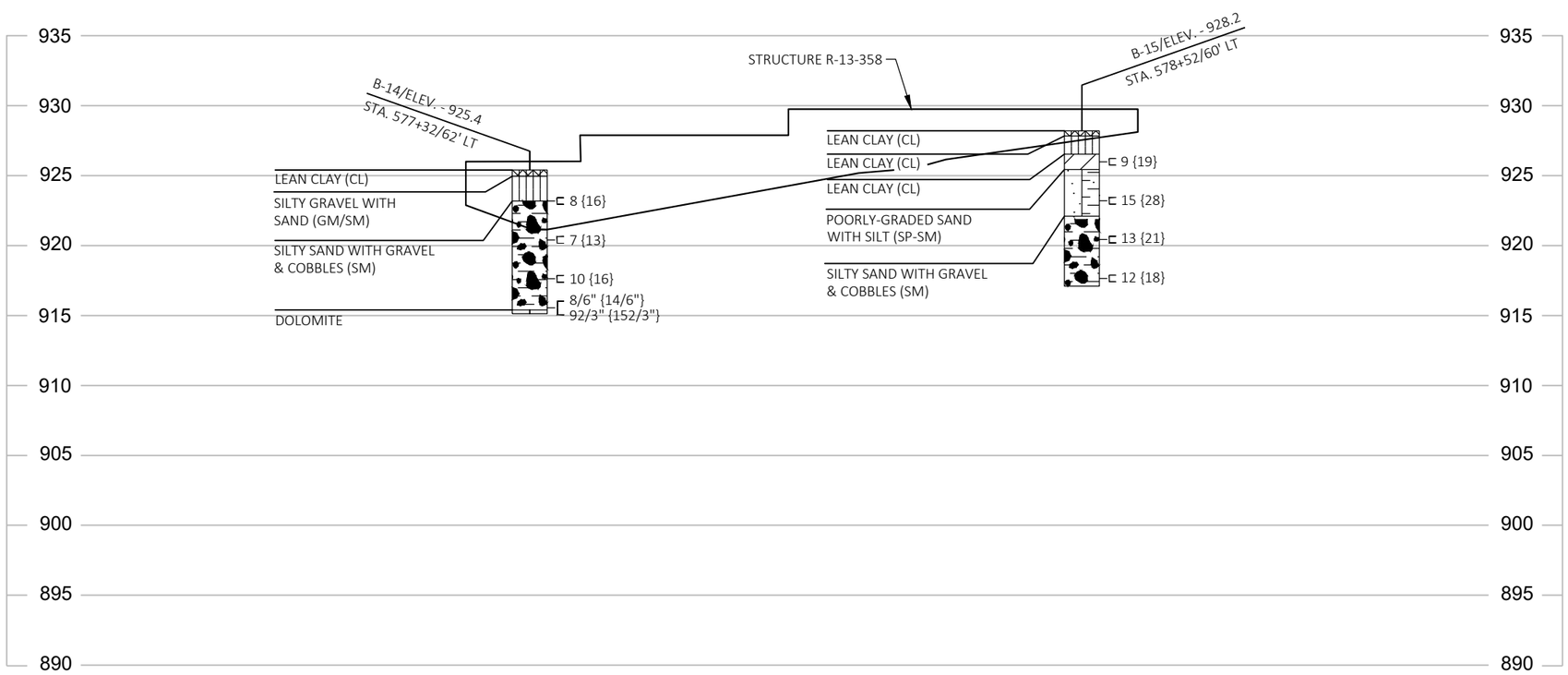

MATERIAL SYMBOLS

ASPHALT, TOPSOIL, PEAT, CONCRETE, FILL, GRAVEL, SAND, CLAY, SILT, BOULDERS OR COBBLES, LIMESTONE, BEDROCK (UNKNOWN), SHALE, SANDSTONE, IGNEOUS/ META

LEGEND OF BORING

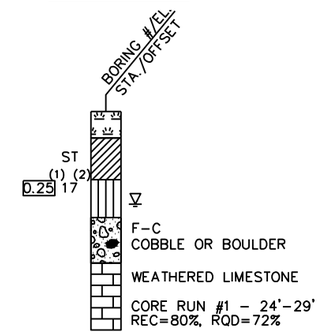

(1) UNCONFINED STRENGTH, AS DETERMINED BY A POCKET PENETROMETER (TSF)

(2) UNLESS OTHERWISE, SPECIFIED THE SPT 'N' VALUE IS BASED ON AASHTO T-206, STANDARD PENETRATION TEST. THE SPT 'N' VALUE PRESENTED HAS NOT BEEN CORRECTED FOR OVERBURDEN PRESSURE OR HAMMER EFFICIENCY.

GROUND WATER ELEVATION

- AT TIME OF DRILLING
- END OF DRILLING
- AFTER DRILLING

ABBREVIATIONS

F-FINE M-MEDIUM C-COARSE ST-SHELBY TUBE

SUBSURFACE EXPLORATION FOR FOUNDATION DESIGN AND BIDDERS INFORMATION

BORINGS WERE COMPLETED AT POINTS APPROXIMATELY AS INDICATED ON THIS DRAWING TO OBTAIN INFORMATION CONCERNING THE CHARACTER OF SUBSURFACE MATERIALS FOUND AT THE SITE. BECAUSE THE INVESTIGATED DEPTHS ARE LIMITED AND THE AREA OF THE BORINGS IS VERY SMALL IN RELATION TO THE ENTIRE SITE, THE WISCONSIN DEPARTMENT OF TRANSPORTATION DOES NOT WARRANT SIMILAR SUBSURFACE CONDITIONS BELOW, BETWEEN, OR BEYOND THESE BORINGS. VARIATIONS IN SOIL CONDITIONS SHOULD BE EXPECTED AND FLUCTUATIONS IN GROUNDWATER LEVELS MAY OCCUR.

KL Engineering
[A] Better Experience
5400 King James Way
Suite 200
Madison, WI. 53719
Phone: (608) 663-1218
Phone: (800)-810-4012
http://klengineering.com
email@klengineering.com

CITY OF FITCHBURG

SUBSURFACE EXPLORATION R-13-358

Project No:	19-3488
Date:	OCT 2019
Designed By:	CAH
Drafted By:	STD
Checked By:	CDH

Revisions:

SHEET NO.

6 OF 6

FILE NAME : G:\FITCHBRG\18013-000\CIVIL3D\SHEETSPLAN\STRUCTURES CAD\080706-SE.DWG