DRAFT

STATE PROJECT	FEDERAL PROJECT	
	PROJECT	CONTRACT
5849-02-02		
5849-02-03		

PROJECT ID: 5849-02-02/03
WITH: N/A

COUNTY: DANE

ORDER OF SHEETS

Section No. 1 Title
Section No. 2 Typical Sections and Details (Includes Erosion Control Plans)
Section No. 3 Estimate of Quantities
Section No. 3 Miscellaneous Quantities
Section No. 4 Right of Way Plat
Section No. 5 Plan and Profile
Section No. 6 Standard Detail Drawings
Section No. 7 Sign Plates
Section No. 8 Structure Plans
Section No. 9 Computer Earthwork Data
Section No. 9 Cross Sections

TOTAL SHEETS =

STATE OF WISCONSIN
DEPARTMENT OF TRANSPORTATION

PLAN OF PROPOSED IMPROVEMENT

C FITCHBURG, MCKEE ROAD

(COMMERCE PARK DR TO SEMINOLE HWY)

CTH PD

DANE COUNTY

STATE PROJECT NUMBER
5849-02-02

C FITCHBURG, MCKEE ROAD

(SANITARY SEWER AND WATER MAIN)

CTH PD

DANE COUNTY

STATE PROJECT NUMBER
5849-02-03

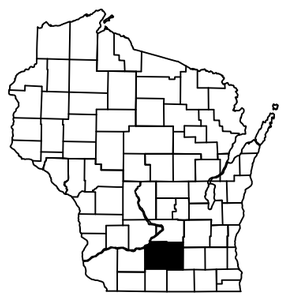

N

BEGIN PROJECT
STA. 14+45.60 PD
Y = 461,237.68
X = 798,896.90

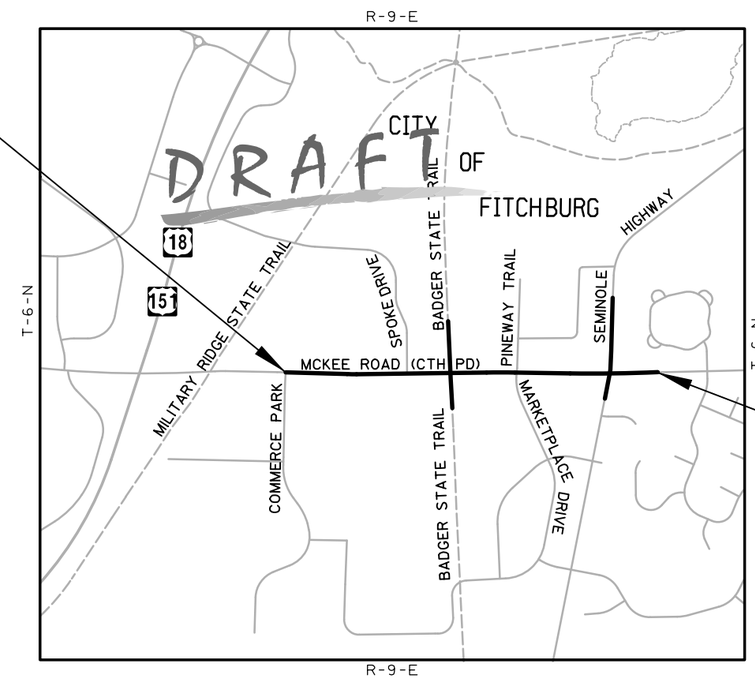

END PROJECT
STA. 51+89.35 PD

LAYOUT
SCALE 0 500 FEET

DESIGN DESIGNATION

A.A.D.T.	=	29,900 (2020)
A.A.D.T.	=	32,200 (2040)
D.H.V.	=	3,190
D.D.	=	59/41
T.	=	5.3%
DESIGN SPEED	=	45 MPH
ESALS	=	3,900,000

CONVENTIONAL SYMBOLS

PLAN

PROPERTY LINE
LOT LINE
LIMITED HIGHWAY EASEMENT
EXISTING RIGHT OF WAY
PROPOSED OR NEW R/W LINE
SLOPE INTERCEPT
REFERENCE LINE
EXISTING CULVERT
PROPOSED CULVERT (Box or Pipe)
COMBUSTIBLE FLUIDS — CAUTION
MARSH AREA
WOODED OR SHRUB AREA
HIGH VOLTAGE — CAUTION

PROFILE

GRADE LINE
ORIGINAL GROUND
MARSH OR ROCK PROFILE (To be noted as such) — ROCK
SPECIAL DITCH — LABEL
GRADE ELEVATION — 95.36
CULVERT (Profile View)

UTILITIES

ELECTRIC — E
FIBER OPTIC — FO
GAS — G
SANITARY SEWER — SAN
STORM SEWER — SS
TELEPHONE — T
WATER — W
UTILITY PEDESTAL
POWER POLE
TELEPHONE POLE

TOTAL NET LENGTH OF CENTERLINE = 0.709 MI.

COORDINATES ON THIS PLAN ARE REFERENCED TO THE WISCONSIN COUNTY COORDINATE SYSTEM (WCCS), DANE COUNTY NAD 83 (2007) ADJUSTMENT. THE ELEVATIONS ARE NAVD88.

ACCEPTED FOR THE CITY OF FITCHBURG

DATE:_____ _____
PRINCIPAL ENGINEER

ORIGINAL PLANS PREPARED BY:

STRAND ASSOCIATES®
910 WEST WINGRA DRIVE
MADISON, WISCONSIN 53715
(608) 251-4843

STATE OF WISCONSIN
DEPARTMENT OF TRANSPORTATION

PREPARED BY

Surveyor	Strand Associates, Inc.
Designer	Strand Associates, Inc.
WisDOT Project Manager	Mark Westerveldt, P.E.

APPROVED FOR THE DEPARTMENT

DATE:_____ _____
(Signature)

E

DRAFT

2

CITY OF FITCHBURG CONTACT

BILL BALKE, P.E.
5520 LACY ROAD
FITCHBURG, WI 53711
(608) 270-4264
E-MAIL: bill.balke@fitchburgwi.gov

DESIGNER CONTACT

JARED ENGELKE, P.E.
STRAND ASSOCIATES, INC.
910 WEST WINGRA DRIVE
MADISON, WI 53715
(608) 251-4843
E-MAIL: jared.engelke@strand.com

WISDOT REGION DESIGN CONTACT

MARK WESTERVELD, P.E.
2101 WRIGHT STREET
MADISON, WI 53704
(608) 246-5355
E-MAIL: mark.westerveld@dot.wi.gov

DNR LIAISON

ERIC HEGGELUND
SOUTH CENTRAL REGION
3911 FISH HATCHERY ROAD
FITCHBURG, WI 53711
(608) 275-3485
E-MAIL: eric.heggelund@wisconsin.gov

UTILITIES

* AT&T WISCONSIN
ATTENTION: CAROL ANASON
316 W. WASHINGTON AVENUE
MADISON, WI 53703
OFFICE: (608) 252-2385
MOBILE: (920) 475-2799
E-MAIL: ca2624@att.com

* ATC MANAGEMENT, INC.
ATTENTION: ANTHONY MARCINIAK
W234 N2000
RIDGEVIEW PARKWAY COURT
WAUKESHA, WI 53188-1000
OFFICE: (262) 506-6814
E-MAIL: amarciniak@atcllc.com

* CHARTER COMMUNICATIONS
ATTENTION: BRANDON STORM
2701 DANIELS STREET
MADISON, WI 53718
OFFICE: (608) 374-3198
E-MAIL: brandon.storm@chartercom.com

* CITY OF FITCHBURG - SEWER & WATER
ATTENTION: TRACY FOSS
5520 LACY ROAD
FITCHBURG, WI 53711
OFFICE: (608) 270-4272
E-MAIL: tracy.foss@fitchburgwi.gov

* CITY OF FITCHBURG - STREET LIGHT & COMM
ATTENTION: ZACH TRZEBIATOWSKI
5520 LACY ROAD
FITCHBURG, WI 53711
OFFICE: (608) 270-4263
E-MAIL: zach.trzebiatowski@fitchburgwi.gov

* CITY OF MADISON TRAFFIC ENGINEERING - STREET LIGHT & COMM
ATTENTION: BRIAN SMITH
215 MARTIN LUTHER KING JR. BOULEVARD, SUITE 100
MADISON, WI 53701-2986
OFFICE: (608) 261-9625
E-MAIL: bsmith@cityofmadison.com

* MADISON GAS AND ELECTRIC COMPANY - ELECTRICITY
ATTENTION: MARK BOHM
P.O. BOX 1231
MADISON, WI 53703
OFFICE: (608) 252-4730
E-MAIL: mbohm@mge.com

* MADISON GAS AND ELECTRIC COMPANY - GAS/PETROLEUM
ATTENTION: SHAUN ENDRES
133 BLAIR STREET
MADISON, WI 53703
MOBILE: (608) 213-6708
E-MAIL: sendres@mge.com

* WINDSTREAM
ATTENTION: KEVIN PARRIS
1858 WRIGHT STREET
MADISON, WI 53704
OFFICE: (608) 819-5016
E-MAIL: kevin.j.parris@windstream.com

* TDS TELECOM
ATTENTION: JERRY MYERS
525 JUNCTION ROAD
MADISON, WI 53717
OFFICE: (608) 664-4404
E-MAIL: jerry.myers@tdstlecom.com

DRAFT

* WISCONSIN INDEPENDENT NETWORK, LLC
ATTENTION: DICK HAMMETTER
800 WISCONSIN AVENUE, SUITE 219
EAU CLAIRE, WI 54703
OFFICE: (715) 838-4406
E-MAIL: hammetter@WINS.net

DIGGERS HOTLINE
Dial 811 or (800)242-8511
www.DiggersHotline.com

* DENOTES DIGGERS HOTLINE MEMBER

DRAFT

2

GENERAL NOTES

MISCELLANEOUS

THE LOCATIONS OF EXISTING AND PROPOSED UTILITY INSTALLATIONS AS SHOWN ON THE PLANS ARE APPROXIMATE. THERE MAY BE OTHER UTILITY INSTALLATIONS WITHIN THE PROJECT AREA THAT ARE NOT SHOWN. THE CONTRACTOR SHALL NOTIFY DIGGERS HOTLINE AND AFFECTED UTILITIES PRIOR TO THE START OF WORK. ANY MUNICIPAL UTILITY WHICH IS NOT A MEMBER OF THE DIGGERS HOTLINE MUST BE CONTACTED SEPARATELY.

RADIUS DIMENSIONS FOR THE CURB AND GUTTER ARE TO THE FLANGE LINE UNLESS OTHERWISE NOTED.

THE EXACT LOCATION AND WIDTH OF DRIVEWAYS WILL BE DETERMINED IN THE FIELD BY THE ENGINEER.

AVOID EXCAVATING WITHIN 5 FEET OF THE FACE OF A TREE, WHEN PRACTICABLE, DUE TO THE POTENTIAL OF DAMAGING THE ROOT SYSTEM.

REMOVALS

NO TREES OR SHRUBS ARE TO BE REMOVED WITHOUT APPROVAL OF THE ENGINEER.

REMOVAL ITEMS SHALL BE REMOVED TO AN EXISTING JOINT, SAWCUT WHERE SHOWN ON THE PLANS, OR AS DIRECTED BY THE ENGINEER.

REMOVAL OF EXISTING UNDERDRAIN AND UNDERDRAIN APRON ENDWALLS IS INCIDENTAL TO EXCAVATION COMMON.

GRADING/EROSION CONTROL

EROSION CONTROL FEATURES AS SHOWN IN THE PLANS ARE AT SUGGESTED LOCATIONS. EXACT LOCATIONS WILL BE DETERMINED BY THE CONTRACTOR'S EROSION CONTROL IMPLEMENTATION PLAN (ECIP) AND APPROVED BY THE ENGINEER IN CONSULTATION WITH THE WISCONSIN DEPARTMENT OF NATURAL RESOURCES. EROSION CONTROL DEVICES SHALL BE PLACED IN SEQUENCE WITH CONSTRUCTION OPERATIONS. ALL EROSION CONTROL MEASURES SHALL BE MAINTAINED UNTIL SUCH TIME AS THE ENGINEER DETERMINES THE MEASURE IS NO LONGER NECESSARY.

DISTURBED AREAS WITHIN THE RIGHT OF WAY SHALL BE RESTORED AS DIRECTED BY THE ENGINEER.

EXCAVATION BELOW SUBGRADE (EBS) IS ESTIMATED AND MAY VARY AS DIRECTED BY THE ENGINEER.

THE LOCATION FOR EBS WILL BE DETERMINED BY THE ENGINEER.

STORM SEWER

STORM SEWER PIPE ELEVATIONS, LENGTH, AND LOCATIONS AS SHOWN ON THE PLANS MAY BE ADJUSTED TO FIT FIELD CONDITIONS WITH APPROVAL BY THE ENGINEER.

USE OF TRENCH BOXES OR STACKED TRENCH BOXES SHALL NOT BE CONSIDERED TEMPORARY SHORING FOR STORM SEWER AND SHALL BE INCLUDED IN THE COST OF THE PIPE OR STRUCTURE.

EXISTING STORM SEWER SIZES SHOWN ARE APPROXIMATE AND THE CONTRACTOR WILL BASE IT'S BID ON THE ACTUAL FIELD SIZES.

PAVING

A SAWED JOINT WILL BE REQUIRED WHERE NEW PAVEMENT IS TO MEET AN EXISTING PAVED SURFACE, EXCEPT WHERE NOTED IN THE PLANS.

THE CONTRACTOR'S PAVING OPERATIONS SHALL BE CONSISTENT WITH THE PLAN TYPICAL SECTIONS AND CONSTRUCTED TO PREVENT HMA LONGITUDINAL JOINTS FROM BEING LOCATED WITHIN A DRIVING, PASSING, OR PARKING LANE.

ABBREVIATIONS

BOC	BACK OF CURB
BOW	BACK OF SIDEWALK
CBSS	CONCRETE BARRIER SINGLE SLOPE
CMCP	CORRUGATED METAL CULVERT PIPE
COR.	CORNER
CP	CULVERT PIPE
V.	DESIGN SPEED
Da	DEGREE OF CURVE
DIM.	DIMENSION
e.	EXTERNAL DISTANCE
ESAL	EQUIVALENT SINGLE AXLE LOAD
EOP	EDGE OF PAVEMENT
EXIST.	EXISTING
FOC	FACE OF CURB
FOW	FACE OF SIDEWALK
H.P.	HIGH POINT
D.	LANE DISTRIBUTION
L.P.	LOW POINT
MAX.	MAXIMUM
MIN.	MINIMUM
NOR.	NORMAL
RCCP	REINFORCED CONCRETE CULVERT PIPE
REQ'D	REQUIRED
RET.	RETAINING
SSPRC	STORM SEWER PIPE REINFORCED CONCRETE
SSPRCHE	STORM SEWER PIPE REINFORCED CONCRETE HORIZONTAL ELLIPTICAL
TOC	TOP OF CURB

SECTION 2 ORDER OF SHEETS

GENERAL NOTES
PROJECT OVERVIEW
TYPICAL EXISTING SECTIONS
TYPICAL FINISHED SECTIONS
CONSTRUCTION DETAILS (INCLUDING CURB RAMP DETAILS)
PLAN DETAILS
EROSION CONTROL
STORM SEWER REMOVALS
STORM SEWER
UTILITY PLAN
PLANTING/LANDSCAPING
EXISTING SIGNING
PERMANENT SIGNING & MARKING
LIGHTING
TEMPORARY TRAFFIC SIGNALS
TRAFFIC SIGNALS
TRAFFIC CONTROL
ALIGNMENT PLAN
CONTROL POINT DATA

REFERENCE LINE CALL OUTS

PD	CTH PD
EB	EASTBOUND CTH PD
WB	WESTBOUND CTH PD
SH	SEMINOLE HIGHWAY
BT	BADGER STATE TRAIL
NP	NORTH RETURN PATH
SP	SOUTH RETURN PATH
CP	COMMERCE PARK DRIVE
MP	MARKETPLACE DRIVE
SD	SPOKE DRIVE
SL	WESTBOUND CTH PD SLOTTED LEFT LANE

DRAFT

DRAFT

2

SCALE, FEET 0 150 300

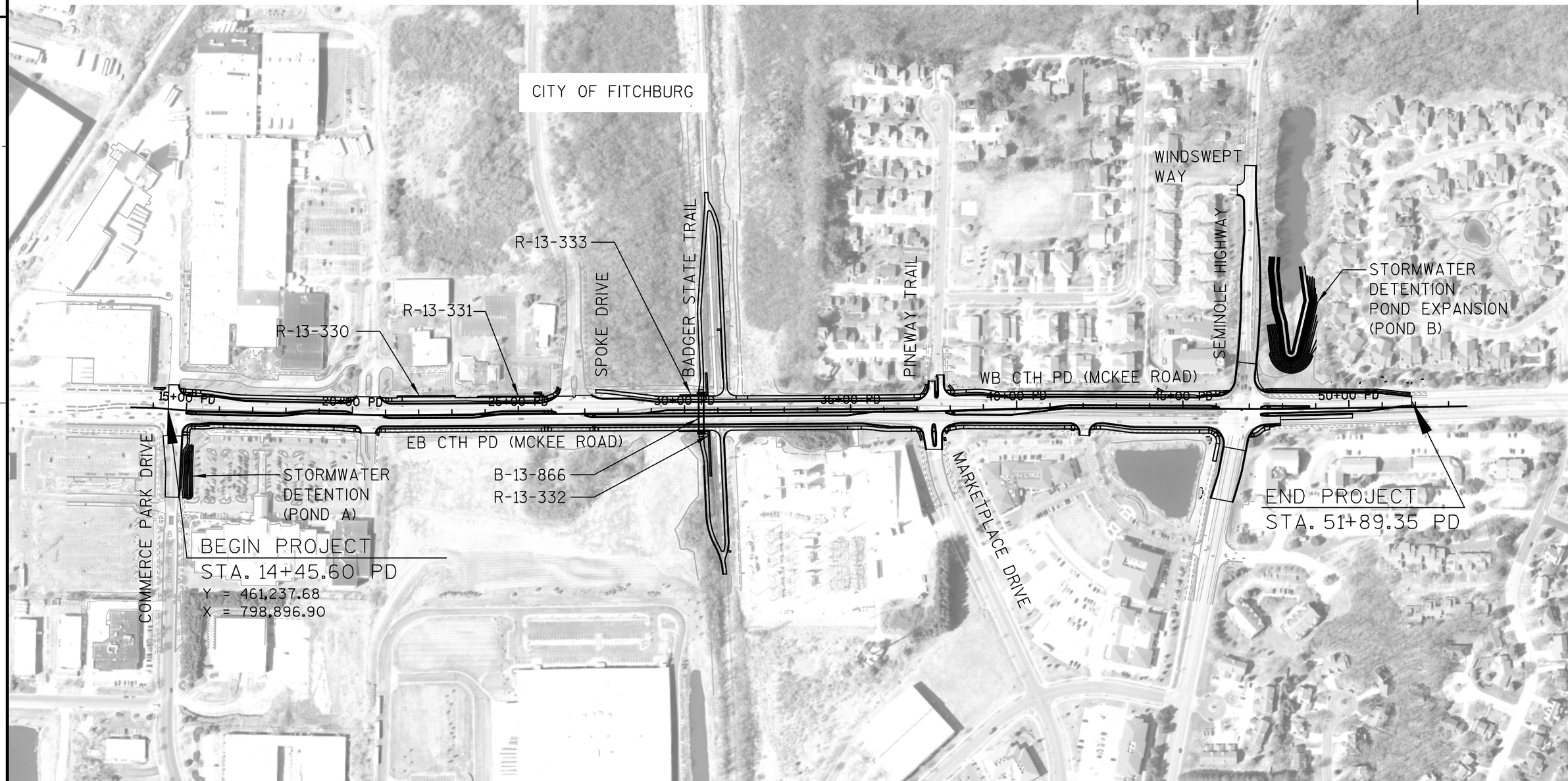

DRAFT

PROJECT NO:5849-02-02	HWY:CTH PD	COUNTY:DANE	PROJECT OVERVIEW	SHEET 4	E

DRAFT

2

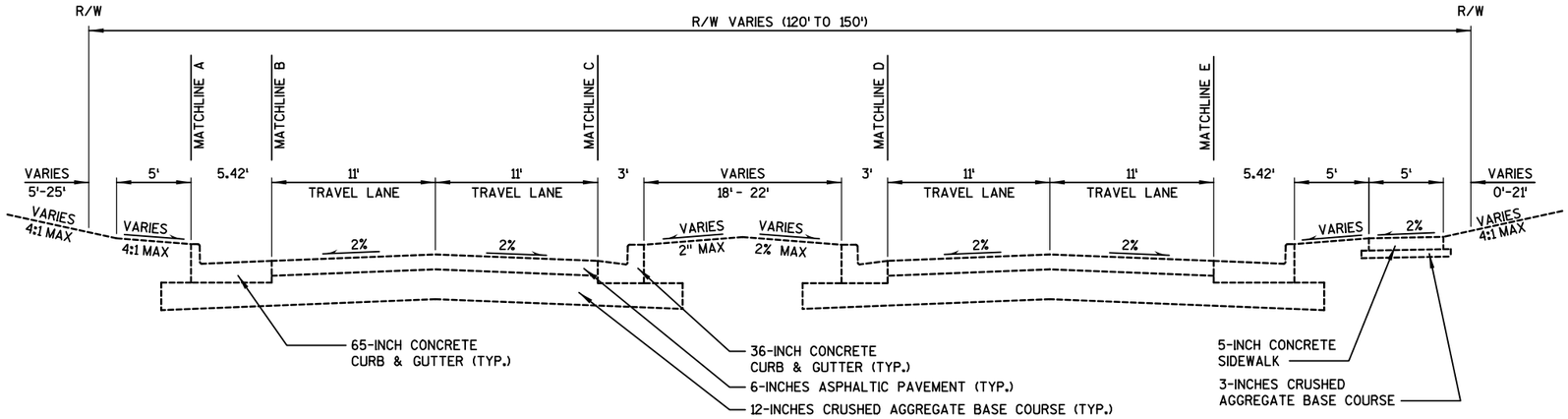

TYPICAL EXISTING SECTION - CTH PD (MCKEE ROAD)

STA. 14+46 PD TO 51+89 PD

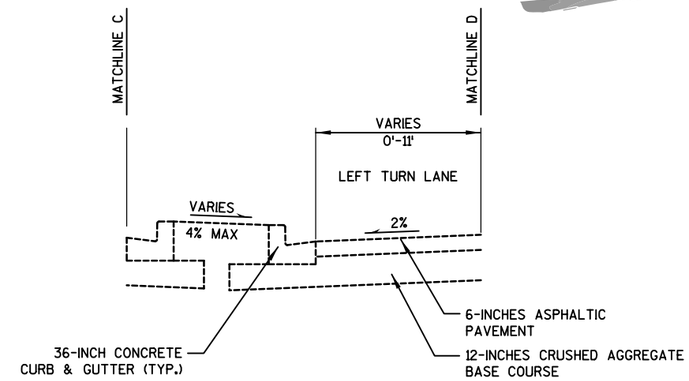

TYPICAL EXISTING SECTION - CTH PD (MCKEE ROAD)

STA. 17+59 PD TO 19+95 PD
STA. 23+71 PD TO 26+06 PD
STA. 34+85 PD TO 37+08 PD
STA. 40+30 PD TO 46+31 PD

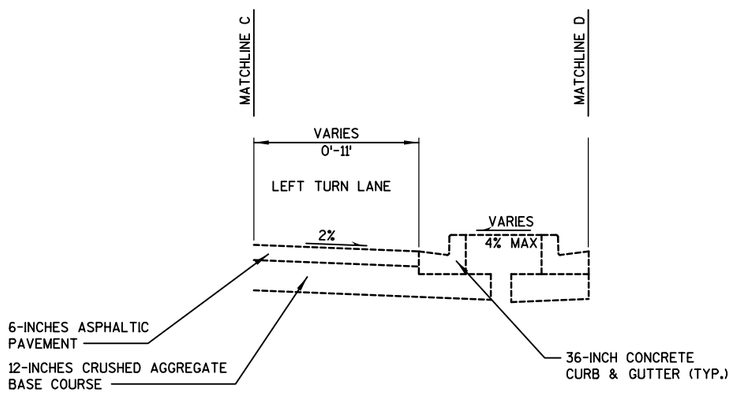

TYPICAL EXISTING SECTION - CTH PD (MCKEE ROAD)

STA. 14+46 PD TO 18+76 PD
STA. 20+86 PD TO 24+69 PD
STA. 26+85 PD TO 29+11 PD
STA. 37+86 PD TO 40+23 PD
STA. 47+31 PD TO 50+09 PD

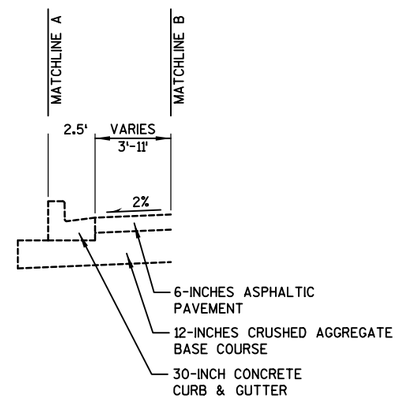

TYPICAL EXISTING SECTION - CTH PD (MCKEE ROAD)

STA. 14+46 PD TO 16+55 PD
STA. 25+35 PD TO 25+90 PD
STA. 27+45 PD TO 28+60 PD
STA. 36+34 PD TO 37+02 PD
STA. 38+33 PD TO 39+96 PD
STA. 45+61 PD TO 46+40 PD
STA. 47+75 PD TO 49+32 PD

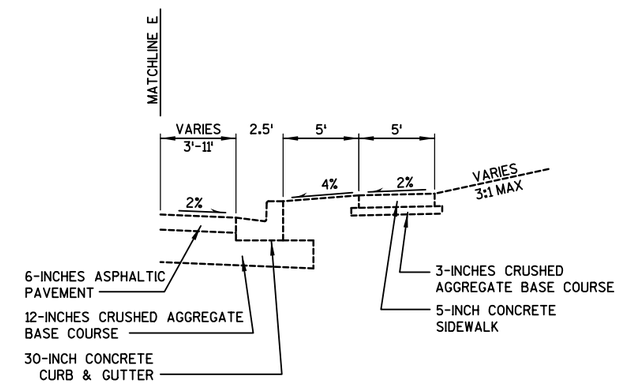

TYPICAL EXISTING SECTION - CTH PD (MCKEE ROAD)

STA. 35+09 PD TO 36+75 PD
STA. 38+06 PD TO 38+76 PD

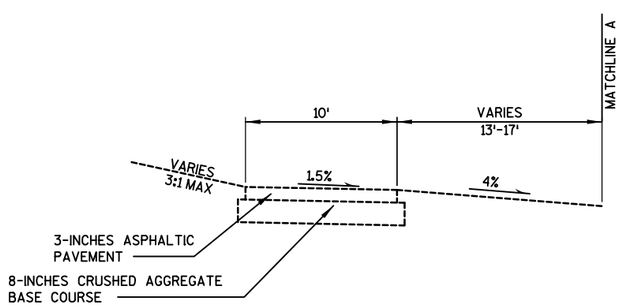

TYPICAL EXISTING SECTION - CTH PD (MCKEE ROAD)

STA. 27+08 PD TO 30+89 PD

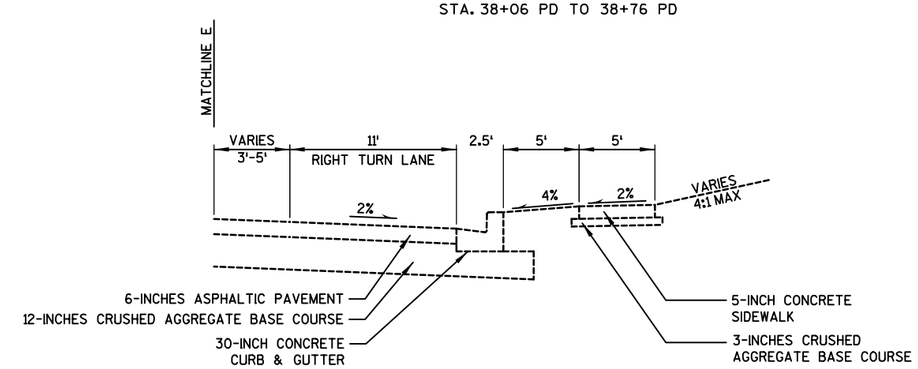

TYPICAL EXISTING SECTION - CTH PD (MCKEE ROAD)

STA. 40+08 PD TO 45+68 PD

DRAFT

PROJECT NO:5849-02-02	HWY:CTH PD	COUNTY:DANE	TYPICAL EXISTING SECTIONS - CTH PD (MCKEE ROAD)	SHEET 5	E

DRAFT

2

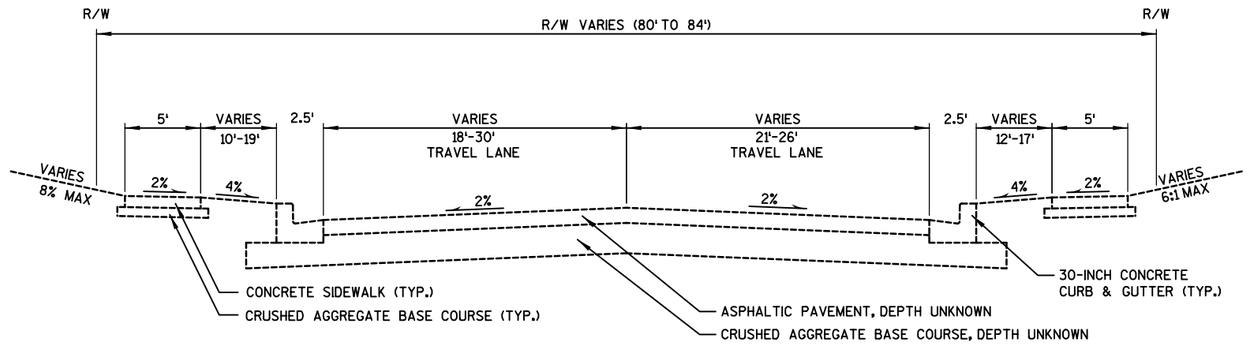

TYPICAL EXISTING SECTION - COMMERCE PARK DRIVE

STA. 1+57 CP TO 3+42 CP

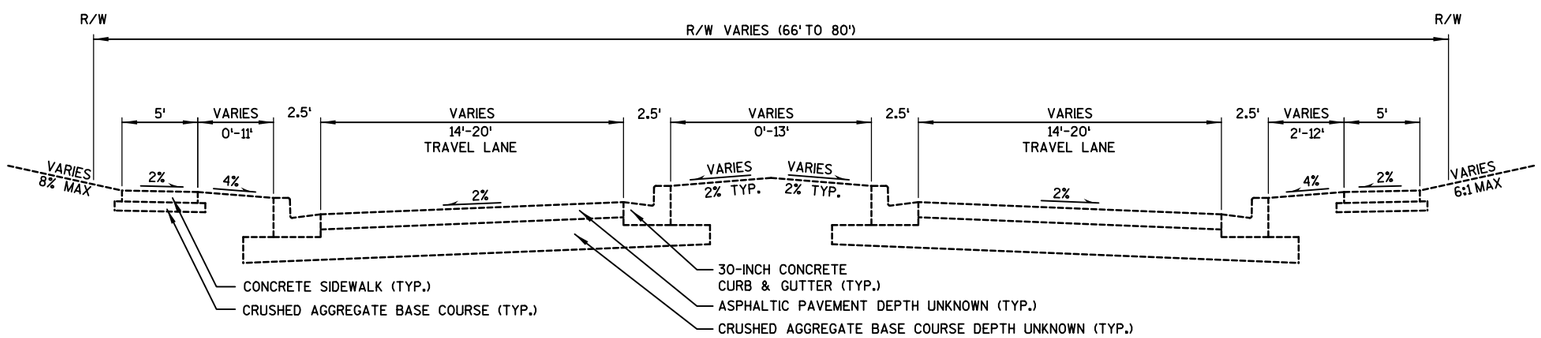

TYPICAL EXISTING SECTION - MARKETPLACE DRIVE/PINEWAY TRAIL

STA. 2+69 MP TO 3+08 MP
MCKEE ROAD INTERSECTION STA. 3+08 MP TO 4+65 MP
STA. 4+65 MP TO 4+92 MP

DRAFT

PROJECT NO:5849-02-02	HWY:CTH PD	COUNTY:DANE	TYPICAL EXISTING SECTIONS - SIDE ROADS	SHEET 6	E

DRAFT

2

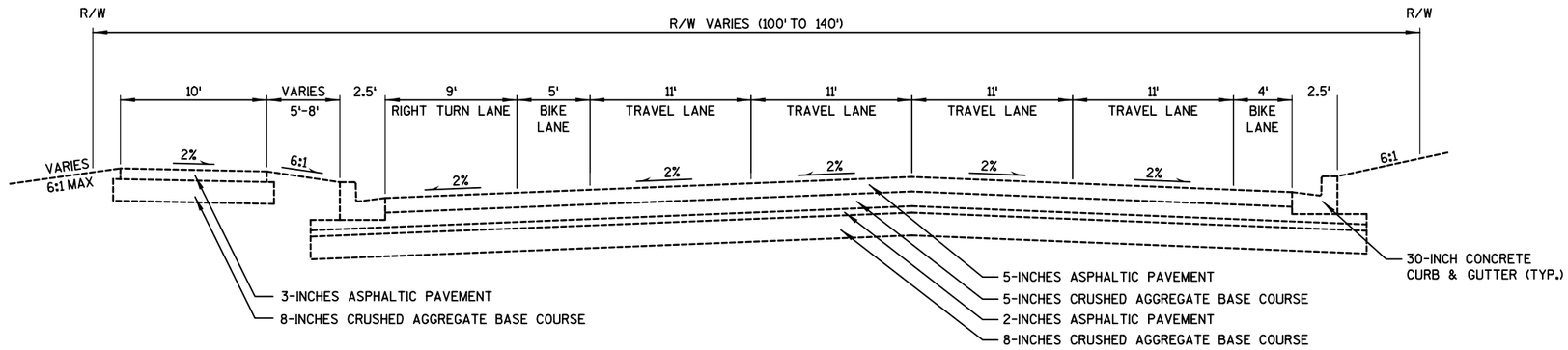

TYPICAL EXISTING SECTION - SEMINOLE HIGHWAY

STA. 4+14 SH TO 6+07 SH

MCKEE ROAD INTERSECTION STA. 6+07 SH TO STA. 7+67 SH

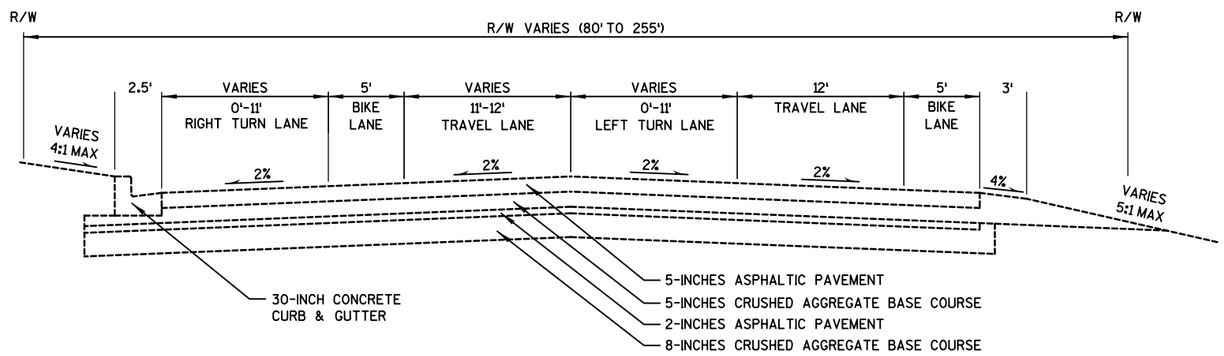

TYPICAL EXISTING SECTION - SEMINOLE HIGHWAY

STA. 7+67 SH TO 9+24 SH

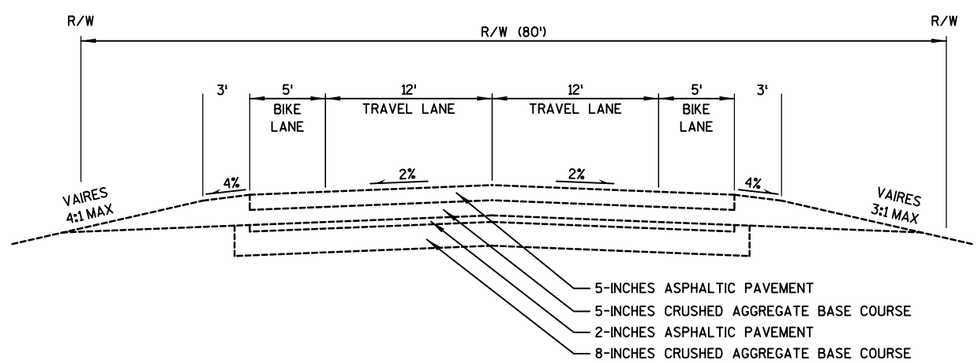

TYPICAL EXISTING SECTION - SEMINOLE HIGHWAY

STA. 9+24 SH TO 14+30 SH

DRAFT

PROJECT NO:5849-02-02	HWY:CTH PD	COUNTY:DANE	TYPICAL EXISTING SECTIONS - SIDE ROADS	SHEET 7	E

DRAFT

2

Ⓐ TOPSOIL; SOD LAWN; FERTILIZER TYPE B

Ⓑ TOPSOIL; SEEDING TEMPORARY; FERTILIZER TYPE B; SEEDING MIXTURE NO. 20; EROSION MAT URBAN CLASS I TYPE A

Ⓒ COLORED AND STAMPED CONCRETE 5-INCH

Ⓓ TOPSOIL; SEEDING TEMPORARY; FERTILIZER TYPE B; SEEDING MIXTURE NO. 20; MULCHING (SEE EROSION CONTROL PLANS FOR LOCATIONS)

① POINT REFERRED TO ON WB PROFILE

② POINT REFERRED TO ON EB PROFILE

③ 4' LATERAL CLEARANCE (2' BEYOND FACE OF CURB)

④ 4' LATERAL CLEARANCE (3' BEYOND FACE OF CURB)

2

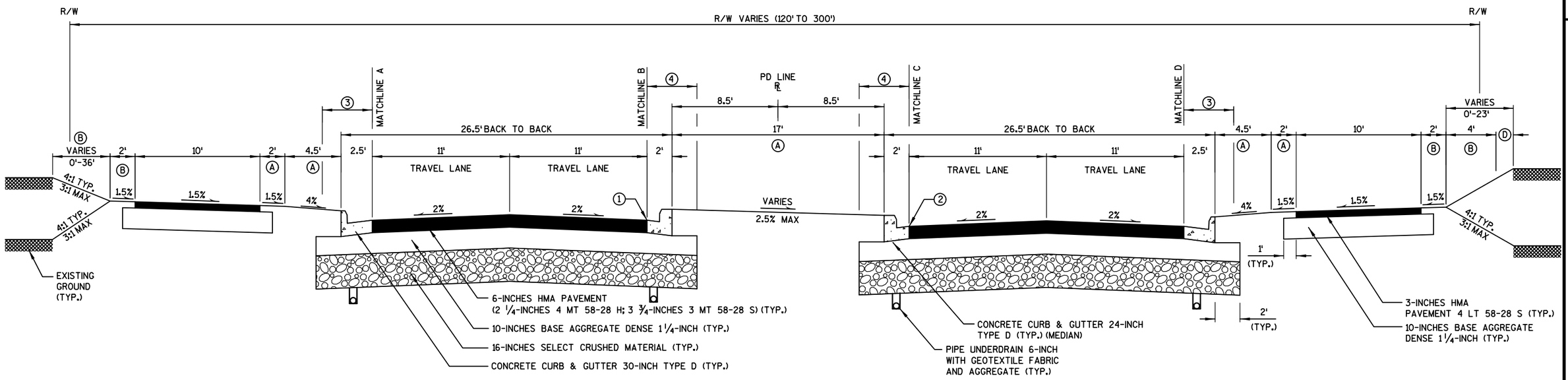

TYPICAL FINISHED SECTION - CTH PD (MCKEE ROAD)

STA. 14+46 PD - STA. 51+89 PD

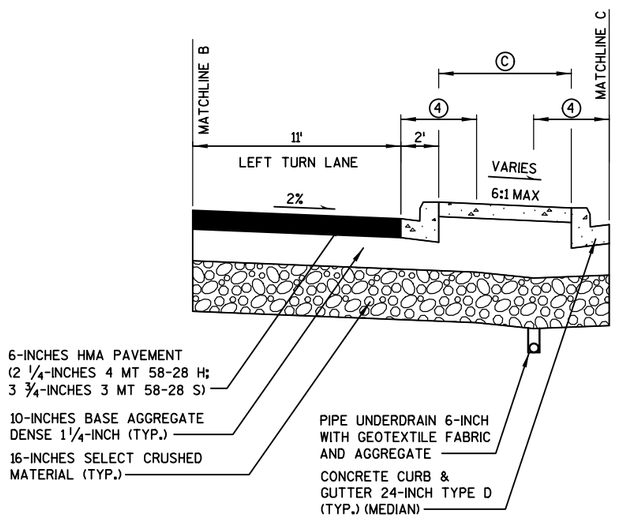

TYPICAL FINISHED SECTION - CTH PD (MCKEE ROAD)

STA. 15+00 PD - STA. 18+70 PD
STA. 20+94 PD - STA. 24+49 PD
STA. 27+00 PD - STA. 29+47 PD
STA. 37+85 PD - STA. 41+60 PD

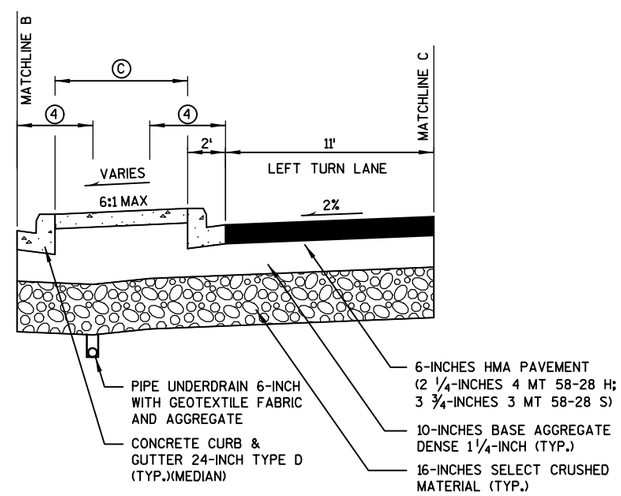

TYPICAL FINISHED SECTION - CTH PD (MCKEE ROAD)

STA. 17+82 PD - STA. 19+95 PD
STA. 23+61 PD - STA. 26+11 PD
STA. 34+89 PD - STA. 37+01 PD

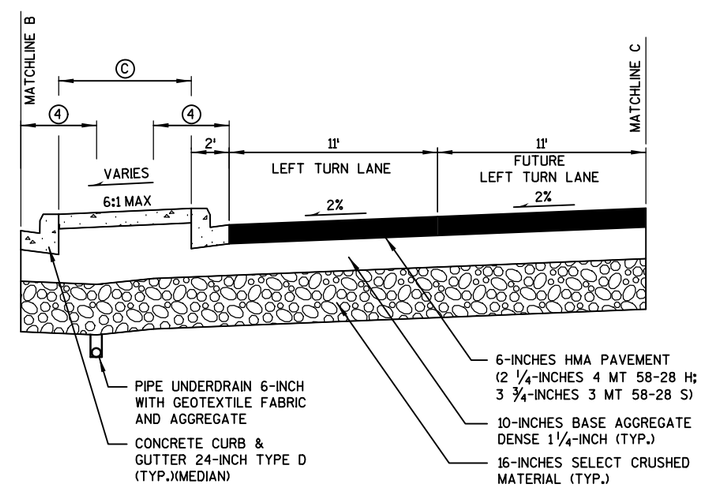

TYPICAL FINISHED SECTION - CTH PD (MCKEE ROAD)

STA. 39+84 PD - STA. 45+82 PD

DRAFT

PROJECT NO: 5849-02-02	HWY: CTH PD	COUNTY: DANE	TYPICAL FINISHED SECTIONS - CTH PD (MCKEE ROAD)	SHEET 8	E

DRAFT

2

Ⓐ TOPSOIL; SOD LAWN; FERTILIZER TYPE B

Ⓑ TOPSOIL; SEEDING TEMPORARY; FERTILIZER TYPE B; SEEDING MIXTURE NO. 20; EROSION MAT URBAN CLASS I TYPE A

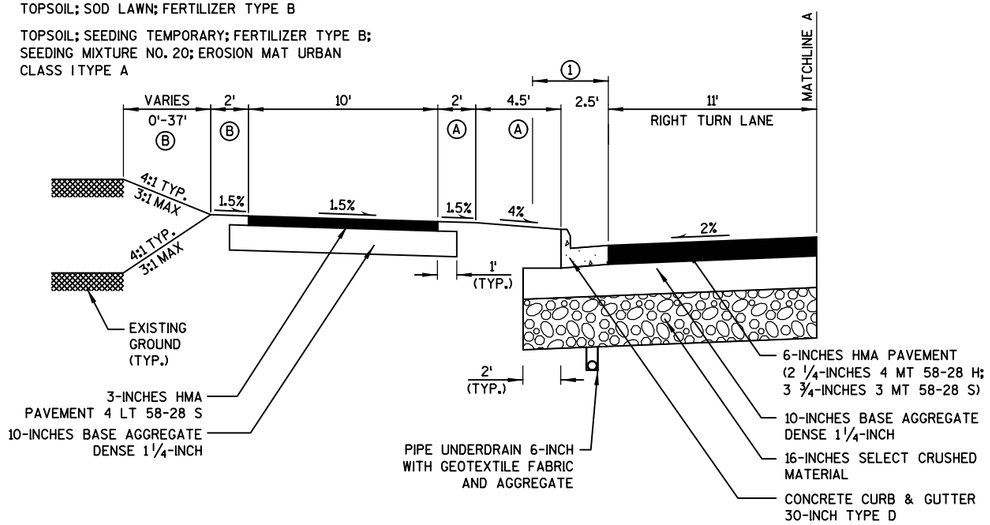

TYPICAL FINISHED SECTION - CTH PD (MCKEE ROAD)

STA. 15+07 PD - STA. 16+75 PD
STA. 27+59 PD - STA. 29+22 PD
STA. 38+17 PD - STA. 39+80 PD
STA. 47+76 PD - STA. 51+89 PD

① 4' LATERAL CLEARANCE (2' BEYOND FACE OF CURB)

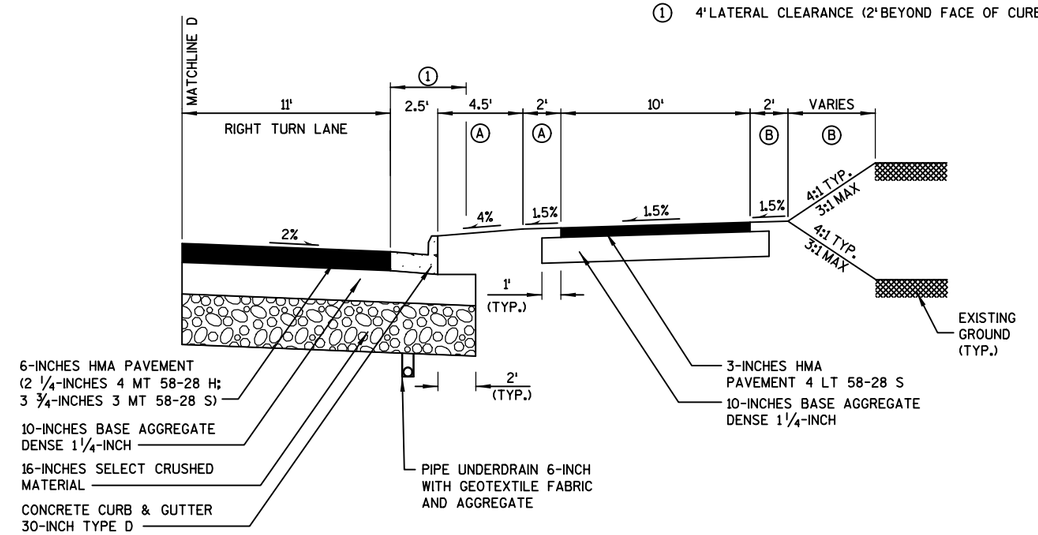

TYPICAL FINISHED SECTION - CTH PD (MCKEE ROAD)

STA. 35+36 PD - STA. 36+99 PD
STA. 42+65 PD - STA. 45+75 PD

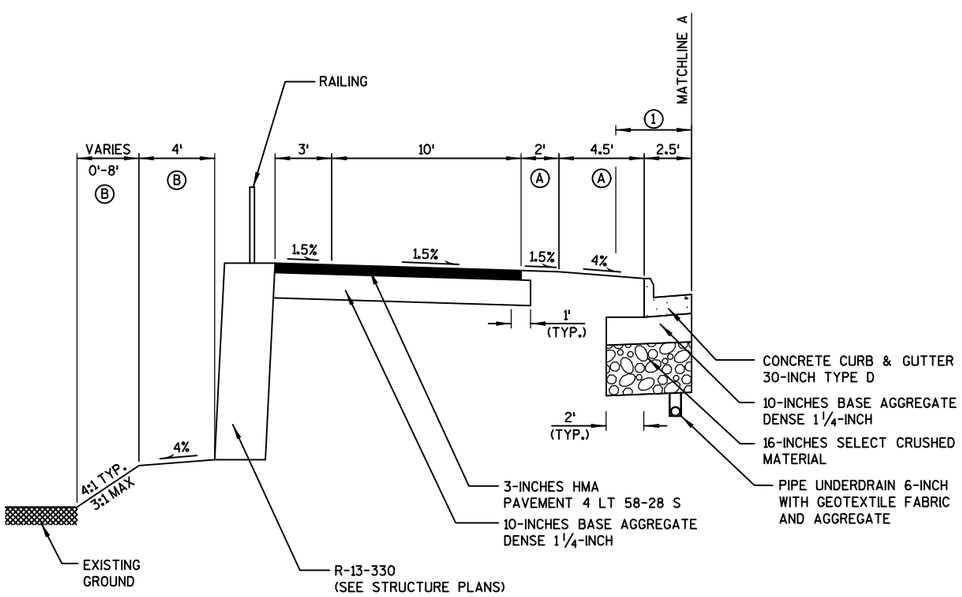

TYPICAL FINISHED SECTION - CTH PD (MCKEE ROAD)

STA. 21+34 PD - STA. 23+10 PD

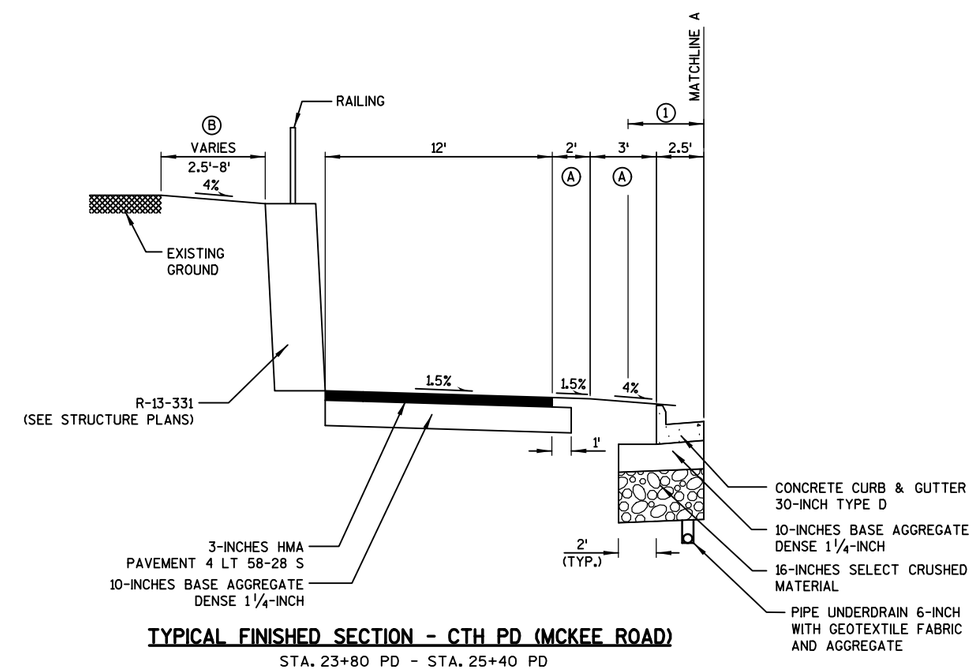

TYPICAL FINISHED SECTION - CTH PD (MCKEE ROAD)

STA. 23+80 PD - STA. 25+40 PD

DRAFT

DRAFT

2

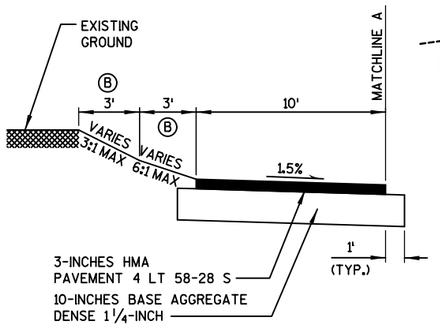

TYPICAL FINISHED SECTION - SEMINOLE HIGHWAY

STA. 5+25 SH - STA. 6+07 SH

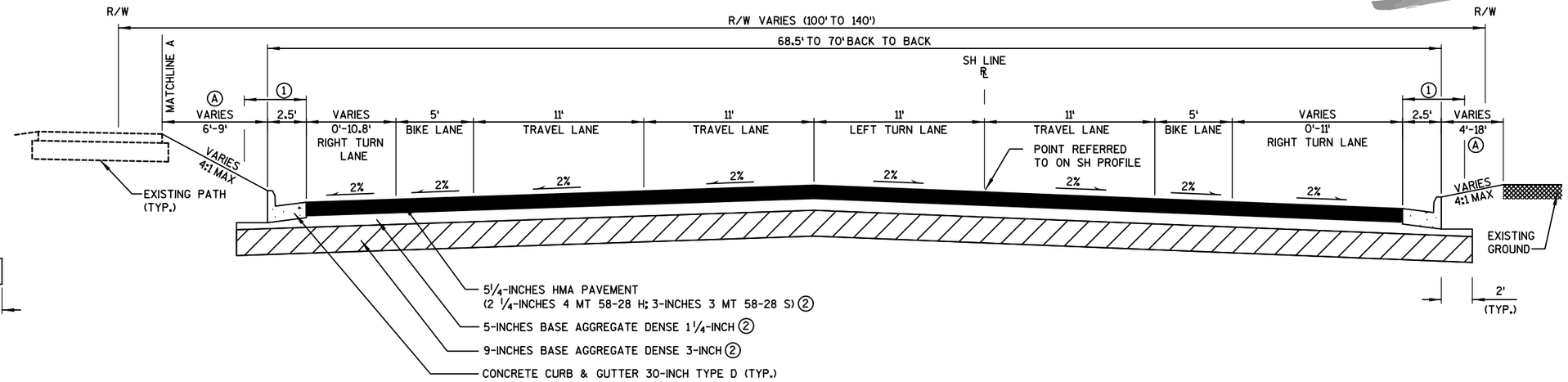

TYPICAL FINISHED SECTION - SEMINOLE HIGHWAY

STA. 4+14 SH - STA. 6+07 SH

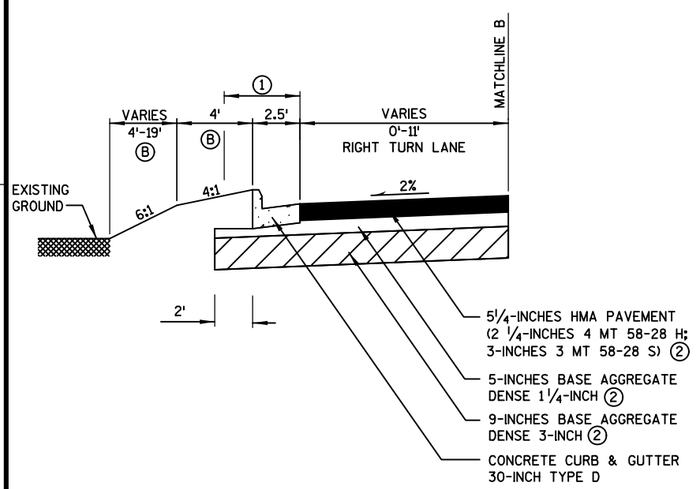

TYPICAL FINISHED SECTION - SEMINOLE HIGHWAY

STA. 7+57 SH - STA. 12+23 SH

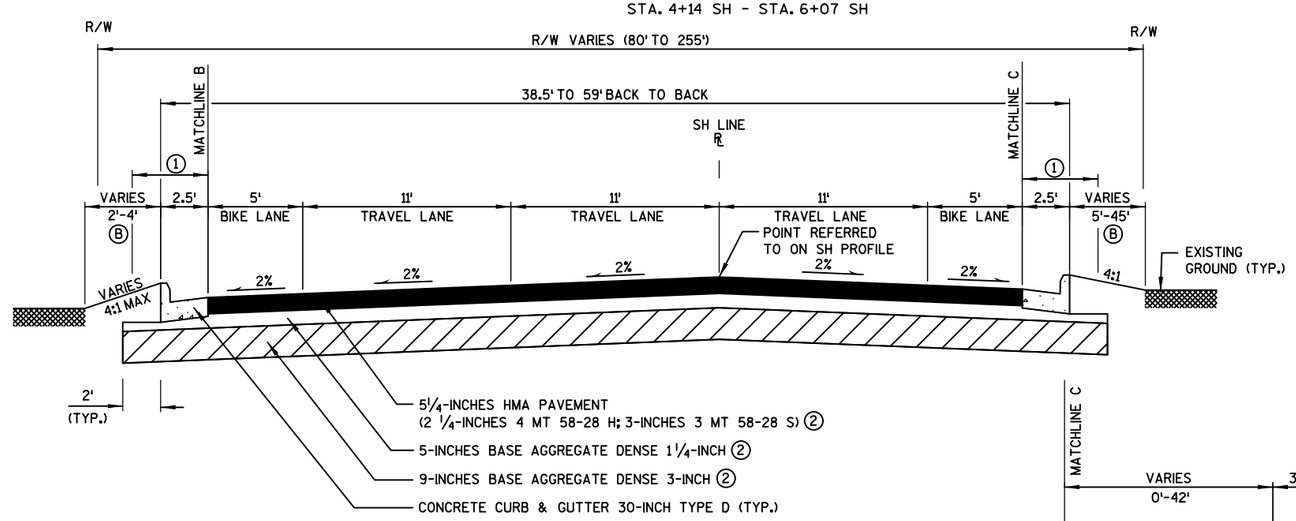

TYPICAL FINISHED SECTION - SEMINOLE HIGHWAY

STA. 7+57 SH - STA. 14+30 SH

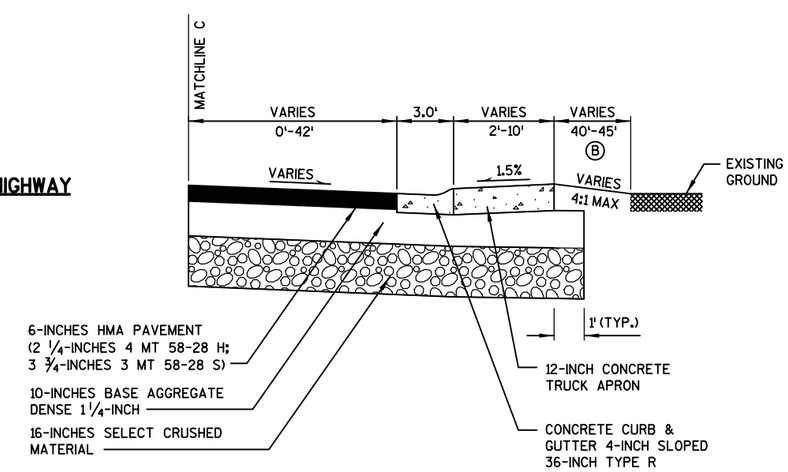

TYPICAL FINISHED SECTION - SEMINOLE HIGHWAY

STA. 7+57 SH - STA. 8+34 SH

(A) TOPSOIL; SOD LAWN; FERTILIZER TYPE B

(B) TOPSOIL; SEEDING TEMPORARY; FERTILIZER TYPE B; SEEDING MIXTURE NO. 20; EROSION MAT URBAN CLASS I TYPE A

(1) 4' LATERAL CLEARANCE (2' BEYOND FACE OF CURB)

(2) PAVEMENT STRUCTURE TO MATCH CTH PD (MCKEE ROAD) STA. 5+72 SH - STA. 8+34 SH
6-INCHES HMA PAVEMENT (2 1/4-INCHES 4 MT 58-28 H; 3 3/4-INCHES 3 MT 58-28 S)
10-INCHES BASE AGGREGATE DENSE 1 1/4-INCH
16-INCHES SELECT CRUSHED MATERIAL

DRAFT

PROJECT NO: 5849-02-02	HWY: CTH PD	COUNTY: DANE	TYPICAL FINISHED SECTIONS - SEMINOLE HIGHWAY	SHEET 10	E

DRAFT

2

① 4' LATERAL CLEARANCE (2' BEYOND FACE OF CURB)
② 4' LATERAL CLEARANCE (3' BEYOND FACE OF CURB)

Ⓐ TOPSOIL; SOD LAWN; FERTILIZER TYPE B
Ⓑ TOPSOIL; SEEDING TEMPORARY; FERTILIZER TYPE B; SEEDING MIXTURE NO. 20; EROSION MAT URBAN CLASS I TYPE A

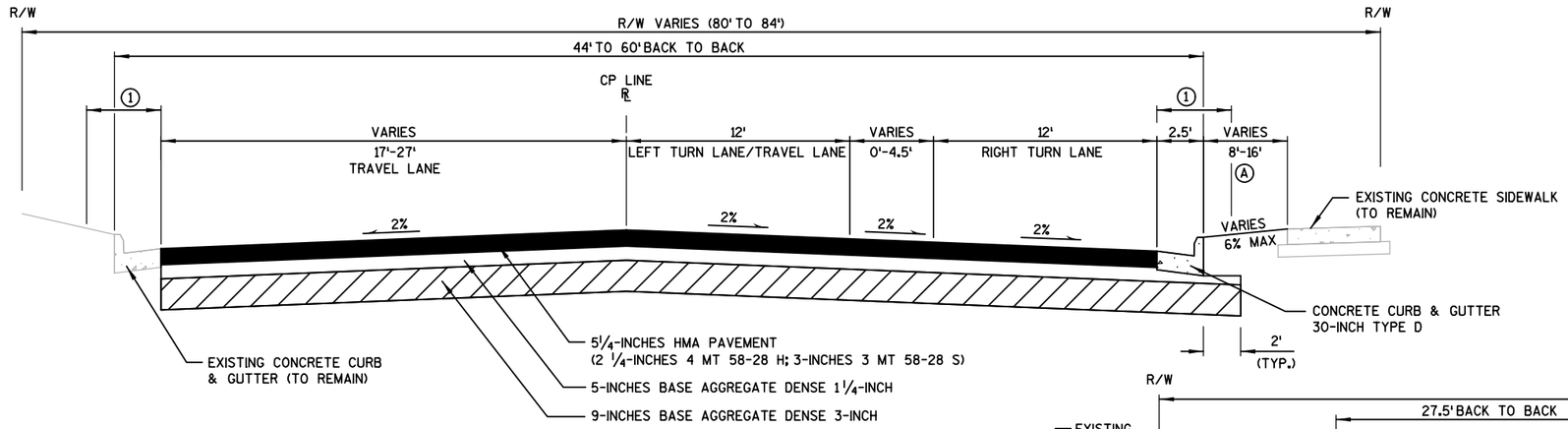

TYPICAL FINISHED SECTION - COMMERCE PARK DRIVE

STA. 1+57 CP TO STA. 3+40 CP

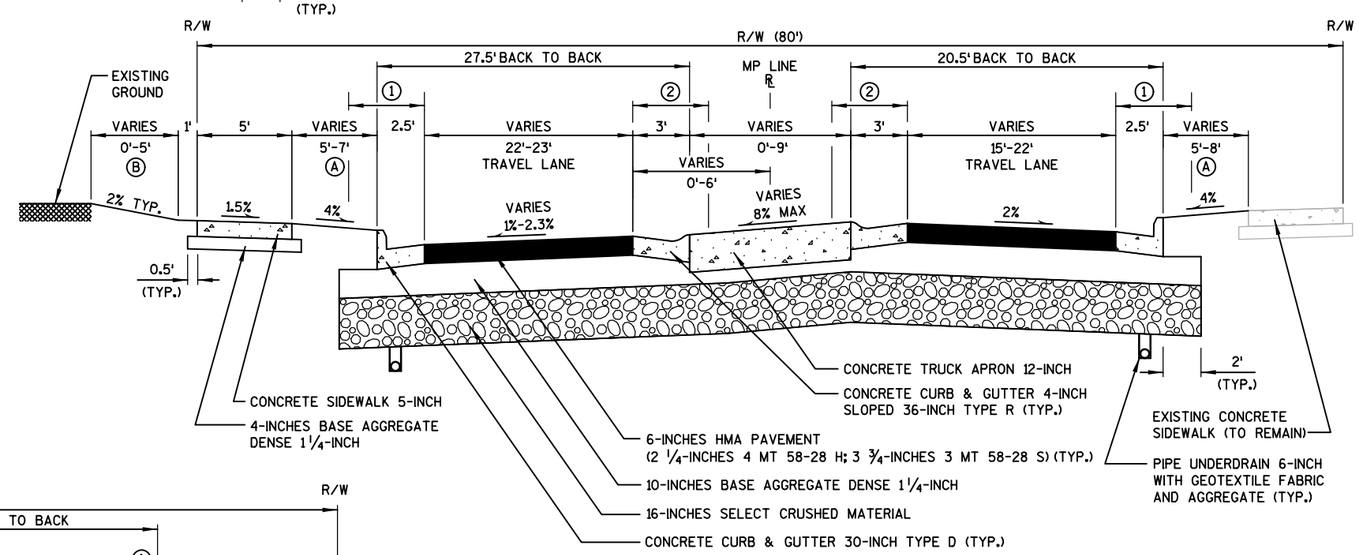

TYPICAL FINISHED SECTION - MARKETPLACE DRIVE

STA. 2+69 MP - STA. 3+08 MP
MCKEE ROAD INTERSECTION STA. 3+08 MP TO STA. 4+65 MP

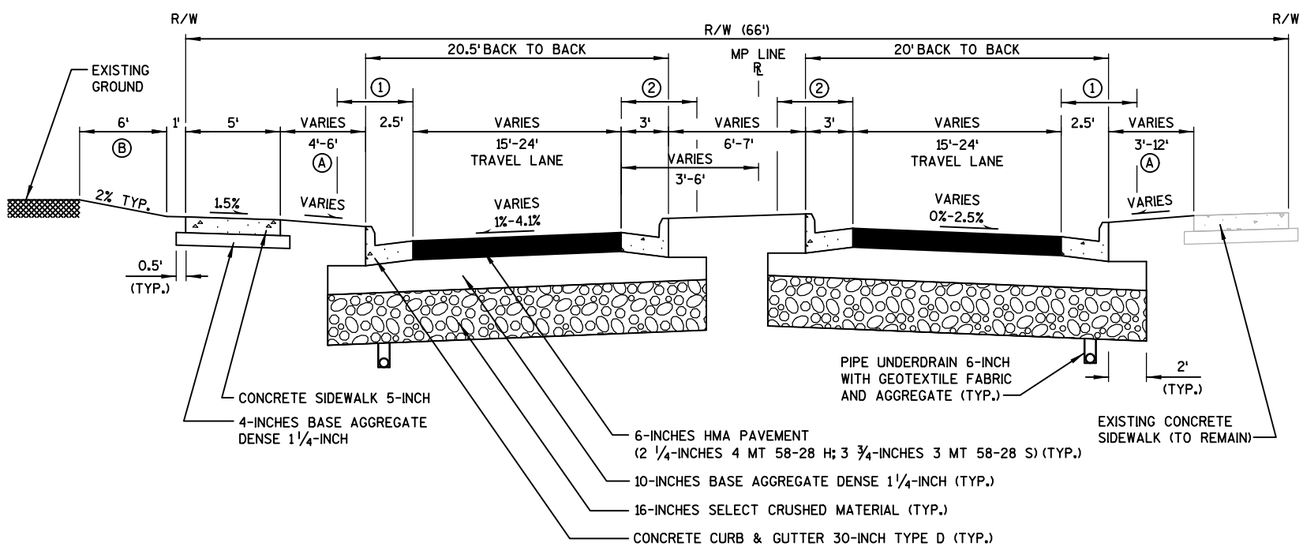

TYPICAL FINISHED SECTION - PINEWAY TRAIL

STA. 4+65 MP - STA. 4+92 MP

DRAFT

PROJECT NO: 5849-02-02	HWY: CTH PD	COUNTY: DANE	TYPICAL FINISHED SECTIONS - COMMERCE, MARKETPLACE, & PINEWAY	SHEET 11	E

DRAFT

2

① POINT REFERRED TO ON BT PROFILE
② POINT REFERRED TO ON NP PROFILE
③ POINT REFERRED TO ON SP PROFILE

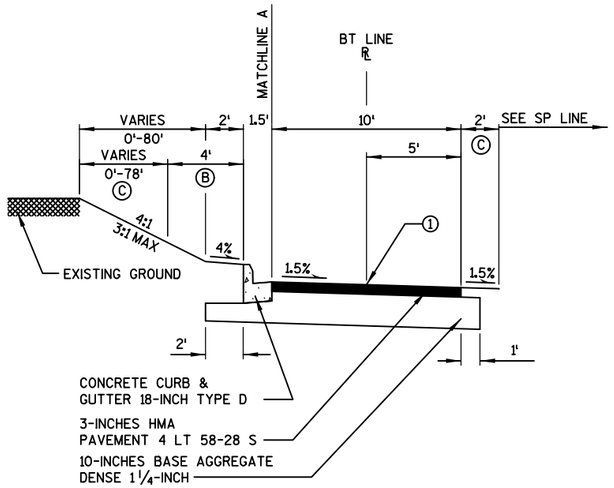

TYPICAL FINISHED SECTION - BADGER STATE TRAIL

STA. 3+00 BT - STA. 7+39 BT

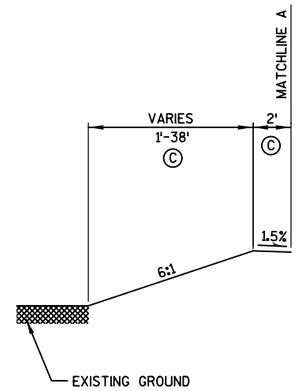

TYPICAL FINISHED SECTION - BADGER STATE TRAIL

STA. 6+35 BT - STA. 7+39 BT

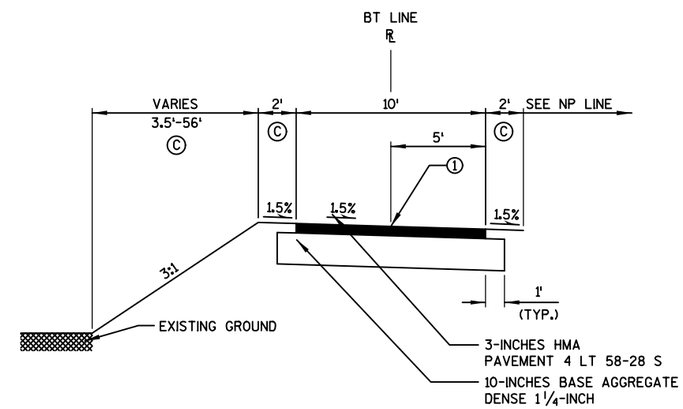

TYPICAL FINISHED SECTION - BADGER STATE TRAIL

STA. 8+50 BT - STA. 14+59 BT

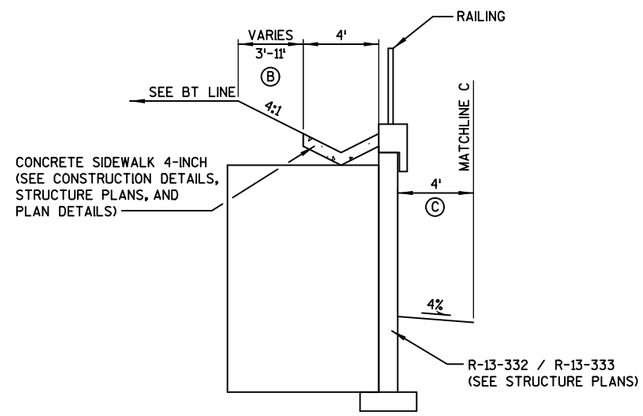

TYPICAL FINISHED SECTION - NORTH/SOUTH RETURN PATH

STA. 108+51 NP - STA. 109+01 NP
STA. 16+04 SP - STA. 17+39 SP

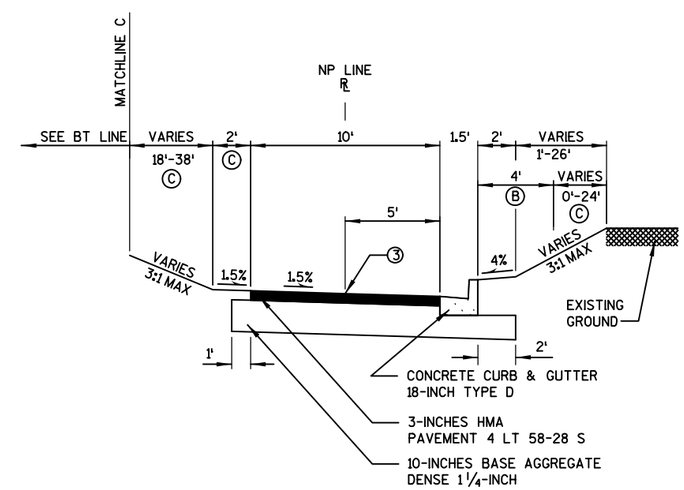

TYPICAL FINISHED SECTION - SOUTH RETURN PATH

STA. 13+57 SP - STA. 17+46 SP

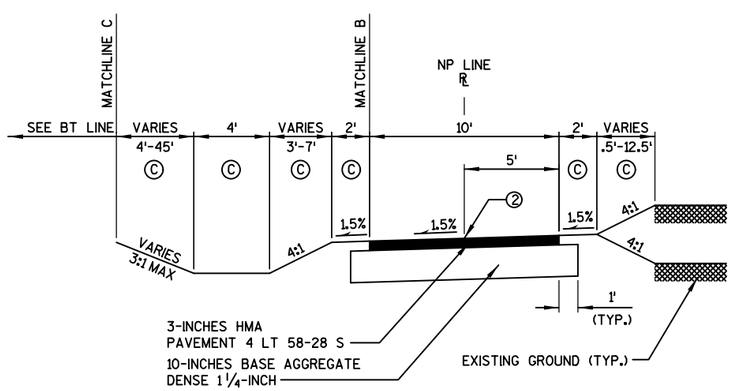

TYPICAL FINISHED SECTION - NORTH RETURN PATH

STA. 108+41 NP - STA. 114+29 NP

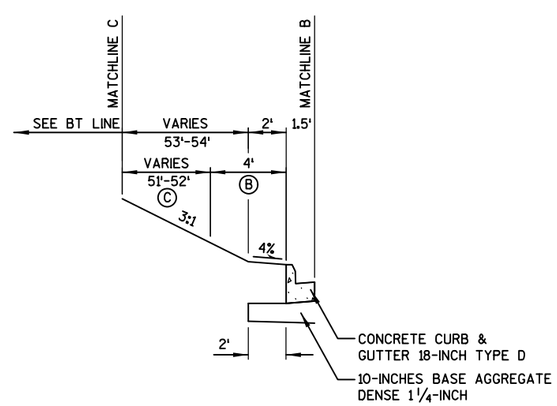

TYPICAL FINISHED SECTION - NORTH RETURN PATH

STA. 108+41 NP - STA. 110+50 NP

Ⓐ TOPSOIL; SOD LAWN; FERTILIZER TYPE B

Ⓑ TOPSOIL; SEEDING TEMPORARY; FERTILIZER TYPE B; SEEDING MIXTURE NO. 20; EROSION MAT URBAN CLASS I TYPE A

Ⓒ TOPSOIL; SEEDING TEMPORARY; FERTILIZER TYPE B; SEEDING MIXTURE NO. 20; MULCHING

DRAFT

PROJECT NO:5849-02-02	HWY:CTH PD	COUNTY:DANE	TYPICAL FINISHED SECTIONS - BADGER TRL. & RETURNS (BT,NP,&SP)	SHEET 12	E

DRAFT

2

RUNOFF COEFFICIENT TABLE

	HYDROLOGIC SOIL GROUP											
	A			B			C			D		
	SLOPE RANGE (PERCENT)			SLOPE RANGE (PERCENT)			SLOPE RANGE (PERCENT)			SLOPE RANGE (PERCENT)		
LAND USE:	0-2	2-6	6 & OVER	0-2	2-6	6 & OVER	0-2	2-6	6 & OVER	0-2	2-6	6 & OVER
ROW CROPS	.08 .22	.16 .30	.22 .38	.12 .26	.20 .34	.27 .44	.15 .30	.24 .37	.33 .50	.19 .34	.28 .41	.38 .56
MEDIAN STRIP-TURF	.19 .24	.20 .26	.24 .30	.19 .25	.22 .28	.26 .33	.20 .26	.23 .30	.30 .37	.20 .27	.25 .32	.30 .40
SIDE SLOPE-TURF			.25 .32			.27 .34			.28 .36			.30 .38
PAVEMENT:												
ASPHALT	.70 - .95											
CONCRETE	.80 - .95											
BRICK	.70 - .80											
DRIVES, WALKS	.75 - .85											
ROOFS	.75 - .95											
GRAVEL ROADS, SHOULDERS	.40 - .60											

TOTAL PROJECT AREA = XXX.XX ACRES
TOTAL AREA EXPECTED TO BE DISTURBED BY CONSTRUCTION ACTIVITIES = XX.XX ACRES

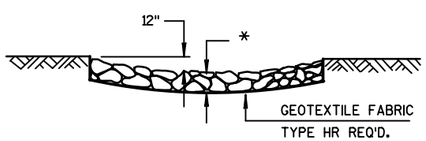

SECTION A-A

* 18-INCH MIN. THICKNESS FOR RIPRAP MEDIUM

24-INCH MIN. THICKNESS FOR RIPRAP HEAVY

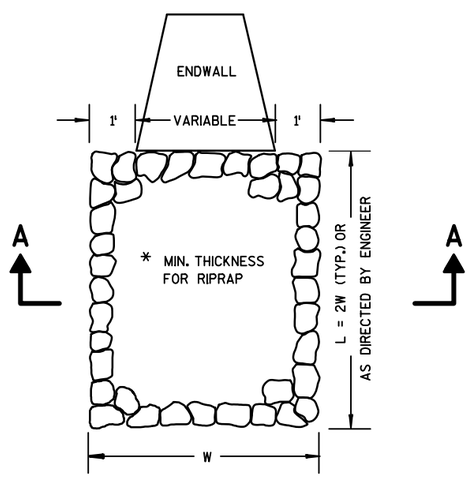

RIPRAP MEDIUM AND RIPRAP HEAVY TREATMENT AT CULVERTS

2

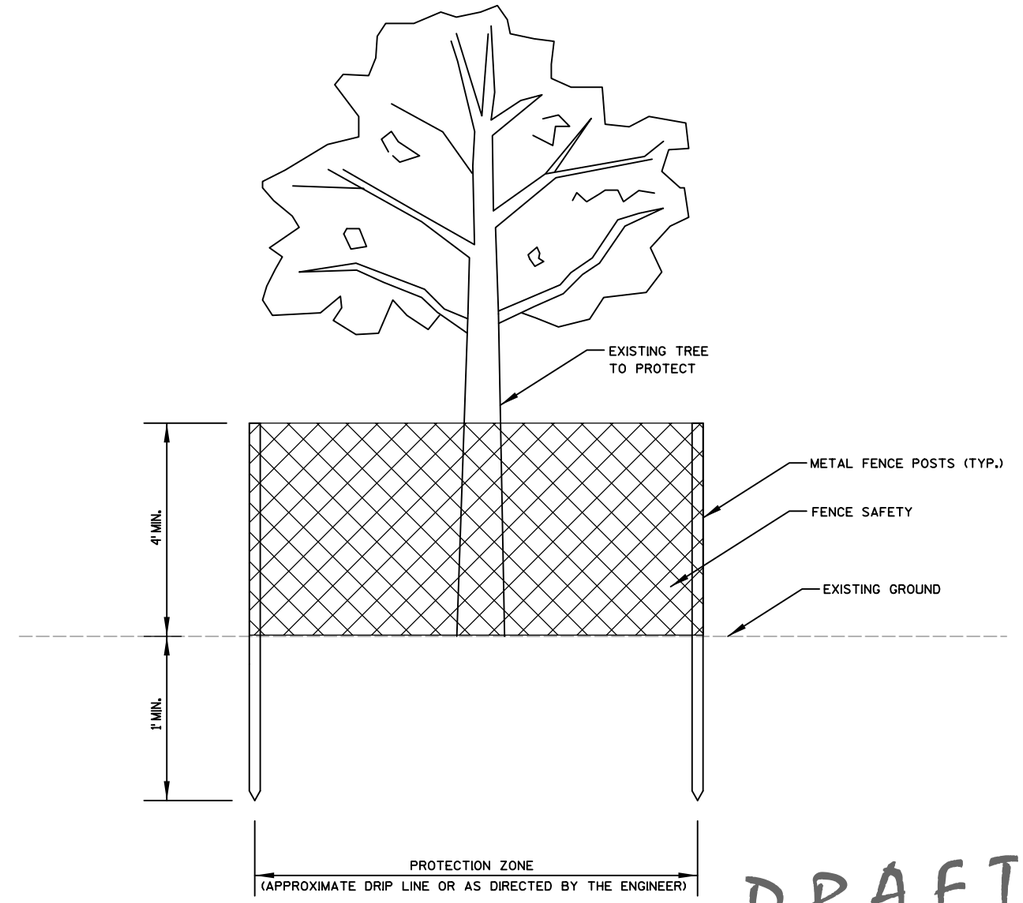

TREE PROTECTION DETAIL

DRAFT

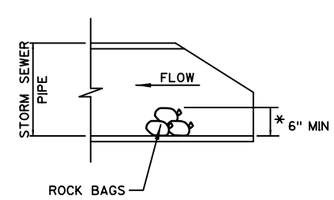

SIDE VIEW
INSTALL ON INLET END

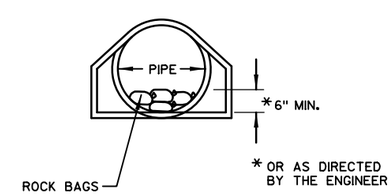

END VIEW

ESTIMATED BAG SIZE = 18" X 12" X 6"	
PIPE SIZE	ESTIMATED NO. OF BAGS
12"	1
18"	2
24"	3
20"x28"	5
30"	5
29"x45"	10
48"	10
54"	10
60"	13
72"	16

CULVERT PIPE CHECKS DETAIL

DRAFT

2

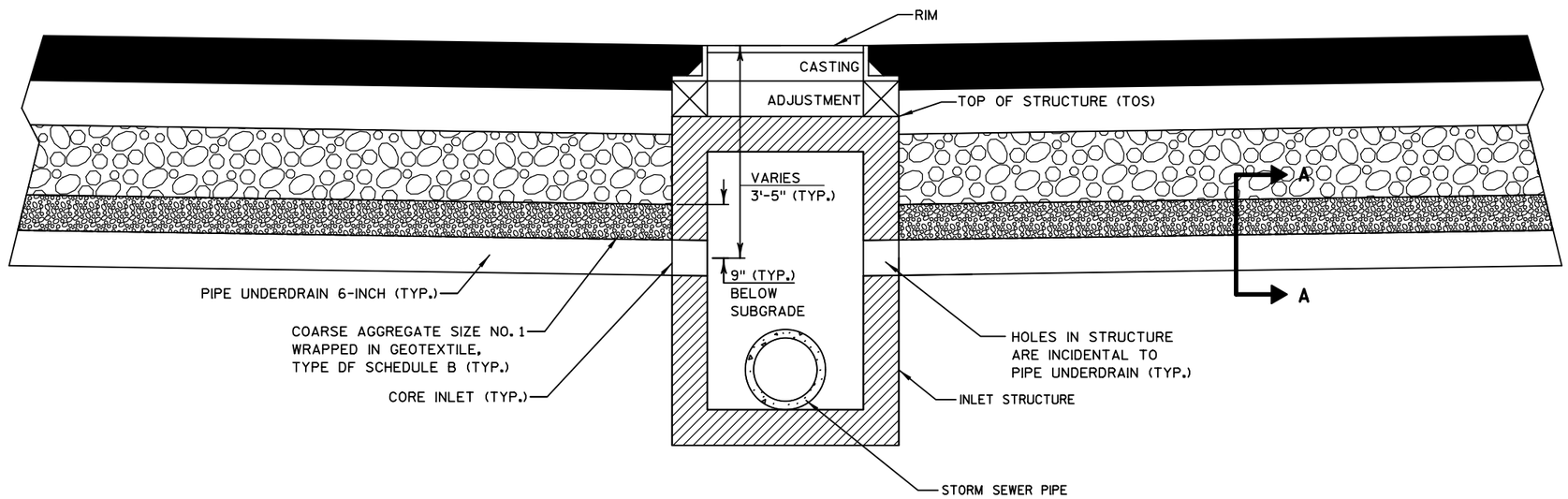

PIPE UNDERDRAIN 6-INCH WITH GEOTEXTILE
FABRIC AND AGGREGATE PROFILE VIEW

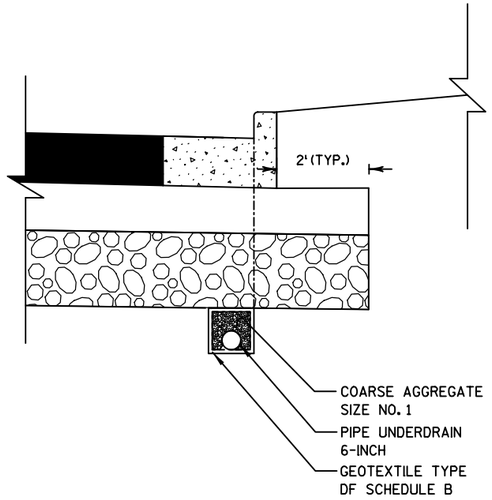

PIPE UNDERDRAIN 6-INCH WITH GEOTEXTILE
FABRIC AND AGGREGATE CROSS SECTION

SEE MISCELLANEOUS QUANTITIES FOR LOCATIONS.

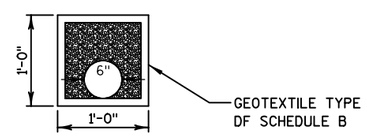

SECTION A-A

PIPE UNDERDRAIN 6-INCH ENCLOSED IN A 1'-0" X 1'-0" AREA OF COARSE AGGREGATE SIZE NO. 1 WRAPPED IN GEOTEXTILE TYPE DF SCHEDULE B.

DRAFT

PIPE UNDERDRAIN 6-INCH WITH GEOTEXTILE
FABRIC AND AGGREGATE DETAIL

NOTES:
PIPE UNDERDRAIN IS TO BE DISCHARGED INTO A STORM SEWER STRUCTURE.

DRAFT

2

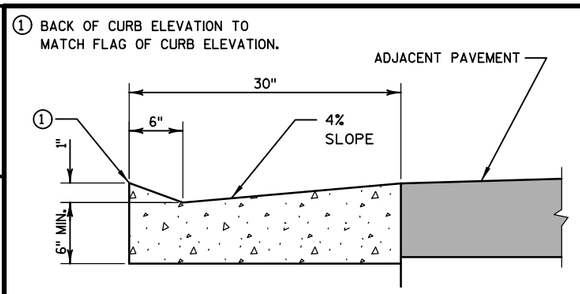

CONCRETE CURB & GUTTER 30-INCH TYPE D DRIVEWAY CURB AND GUTTER DETAIL

NOTE: SEE S.D.D. "CONCRETE CURB, CONCRETE CURB & GUTTER AND TIES" FOR ADDITIONAL INFORMATION.

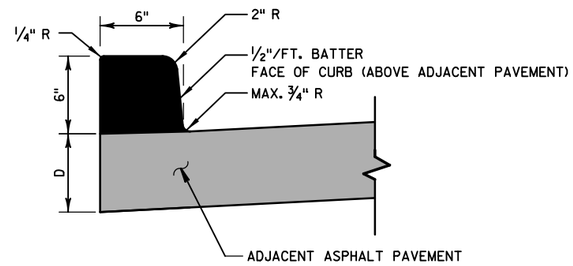

D = DEPTH OF ADJACENT ASPHALT PAVEMENT

ASPHALTIC CURB DETAIL

GENERAL NOTES:

LATERAL CONTRACTION JOINTS SHALL BE PLACED AT INTERVALS OF NOT MORE THAN 15' NOR LESS THAN 6' IN LENGTH. THE JOINTS SHALL BE A MINIMUM OF 3" IN DEPTH.

EXPANSION JOINTS SHALL BE PLACED TRANSVERSALLY AT RADIUS POINTS ON CURVES OF RADIUS 200' OR LESS, AND AT ANGLE POINTS, OR AS DIRECTED BY THE ENGINEER. THE EXPANSION JOINT SHALL BE A ONE PIECE ASPHALTIC MATERIAL HAVING THE SAME DIMENSIONS AS CURB & GUTTER AT THAT STATION AND BE 1/2" THICK.

IN ALL CASES, CONCRETE CURB & GUTTER SHALL BE PLACED ON THOROUGHLY COMPACTED BASE AGGREGATE.

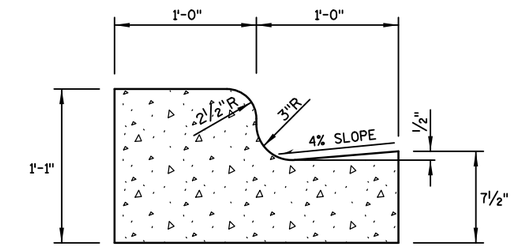

CONCRETE CURB & GUTTER 24-INCH TYPE D DETAIL

NOTE: SEE S.D.D. "CONCRETE CURB, CONCRETE CURB & GUTTER AND TIES" FOR ADDITIONAL INFORMATION.

2

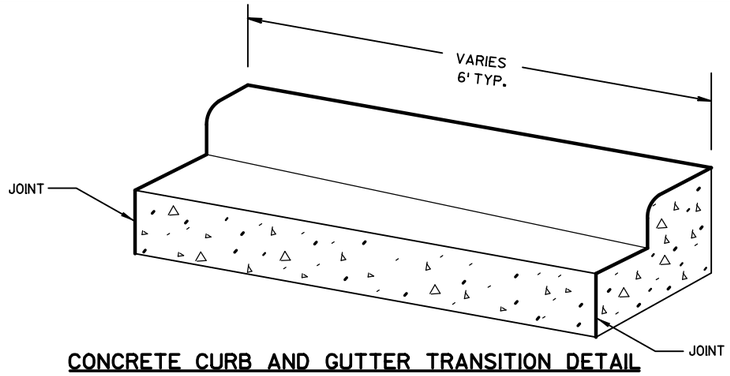

CONCRETE CURB AND GUTTER TRANSITION DETAIL

NOTES: TRANSITION FROM CONCRETE CURB & GUTTER 24-INCH TYPE D TO CONCRETE CURB & GUTTER 30-INCH TYPE D - TO BE MEASURED AND PAID AS CONCRETE CURB & GUTTER 30-INCH TYPE D

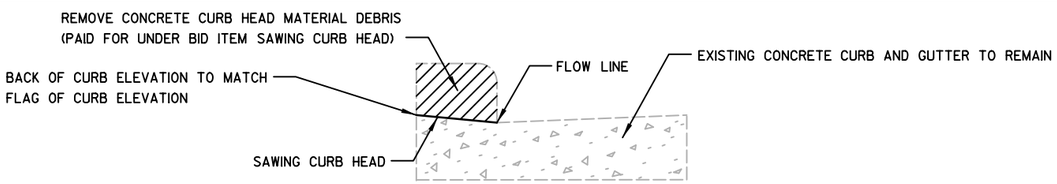

SECTION A-A

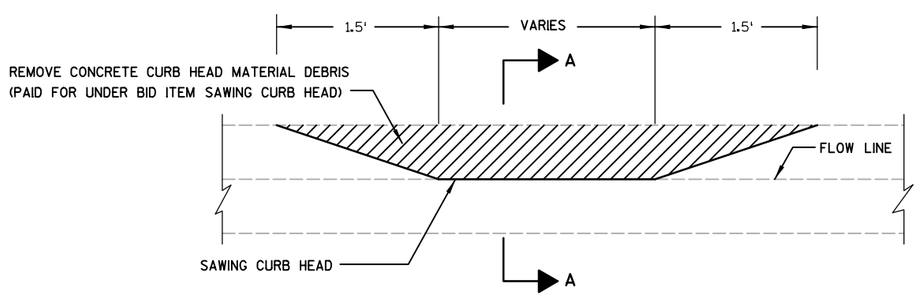

SAWING CURB HEAD DETAIL

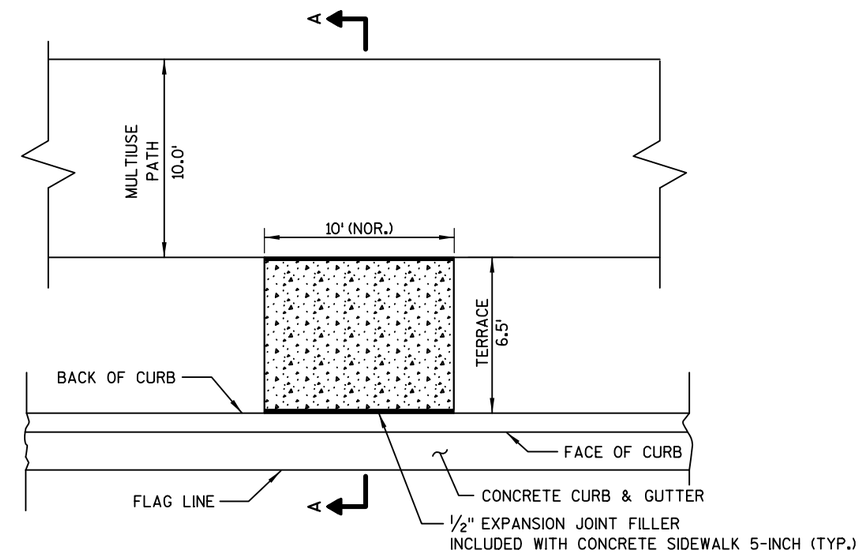

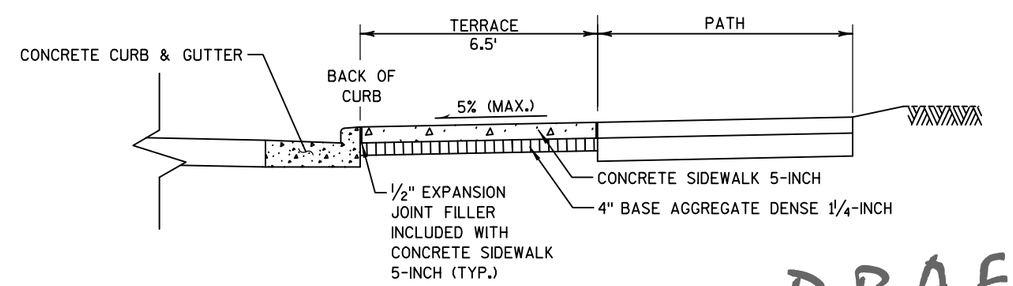

SECTION A-A

BUS STOP PAD DETAIL

(SEE PLAN DETAILS FOR LOCATIONS)

DRAFT

PROJECT NO:5849-02-02	HWY:CTH PD	COUNTY:DANE	CONSTRUCTION DETAILS - CURB AND GUTTER & BUS STOP PAD	SHEET 15	E

DRAFT

2

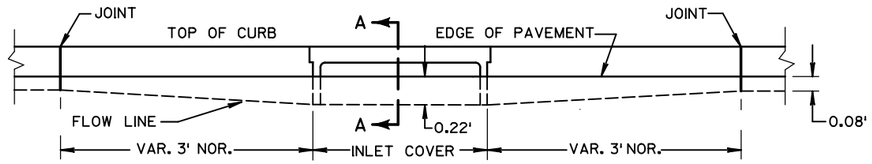

ELEVATION

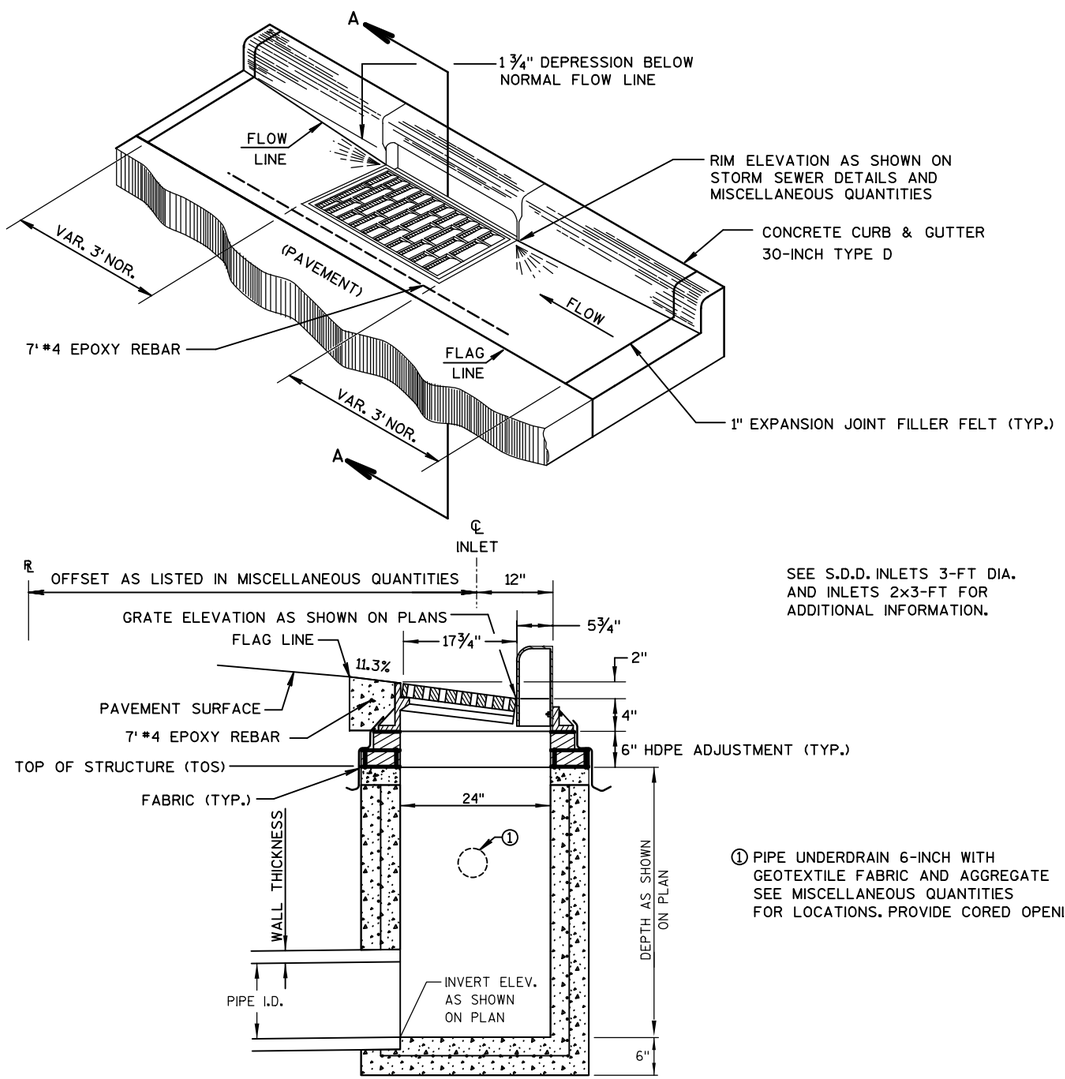

SEE S.D.D. INLETS 3-FT DIA. AND INLETS 2x3-FT FOR ADDITIONAL INFORMATION.

① PIPE UNDERDRAIN 6-INCH WITH GEOTEXTILE FABRIC AND AGGREGATE SEE MISCELLANEOUS QUANTITIES FOR LOCATIONS. PROVIDE CORED OPENING.

SECTION A-A

NOT A BID ITEM

(INLETS 2x3-FT WITH COVERS TYPE H SHOWN)

CONCRETE CURB AND GUTTER 30-INCH TYPE D AT INLETS

2

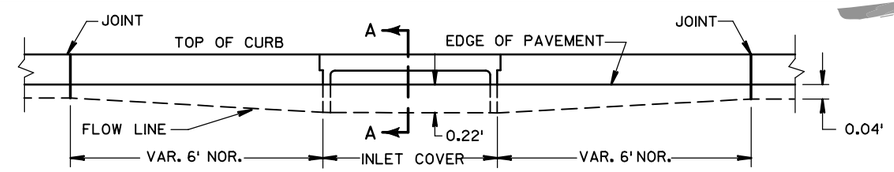

ELEVATION

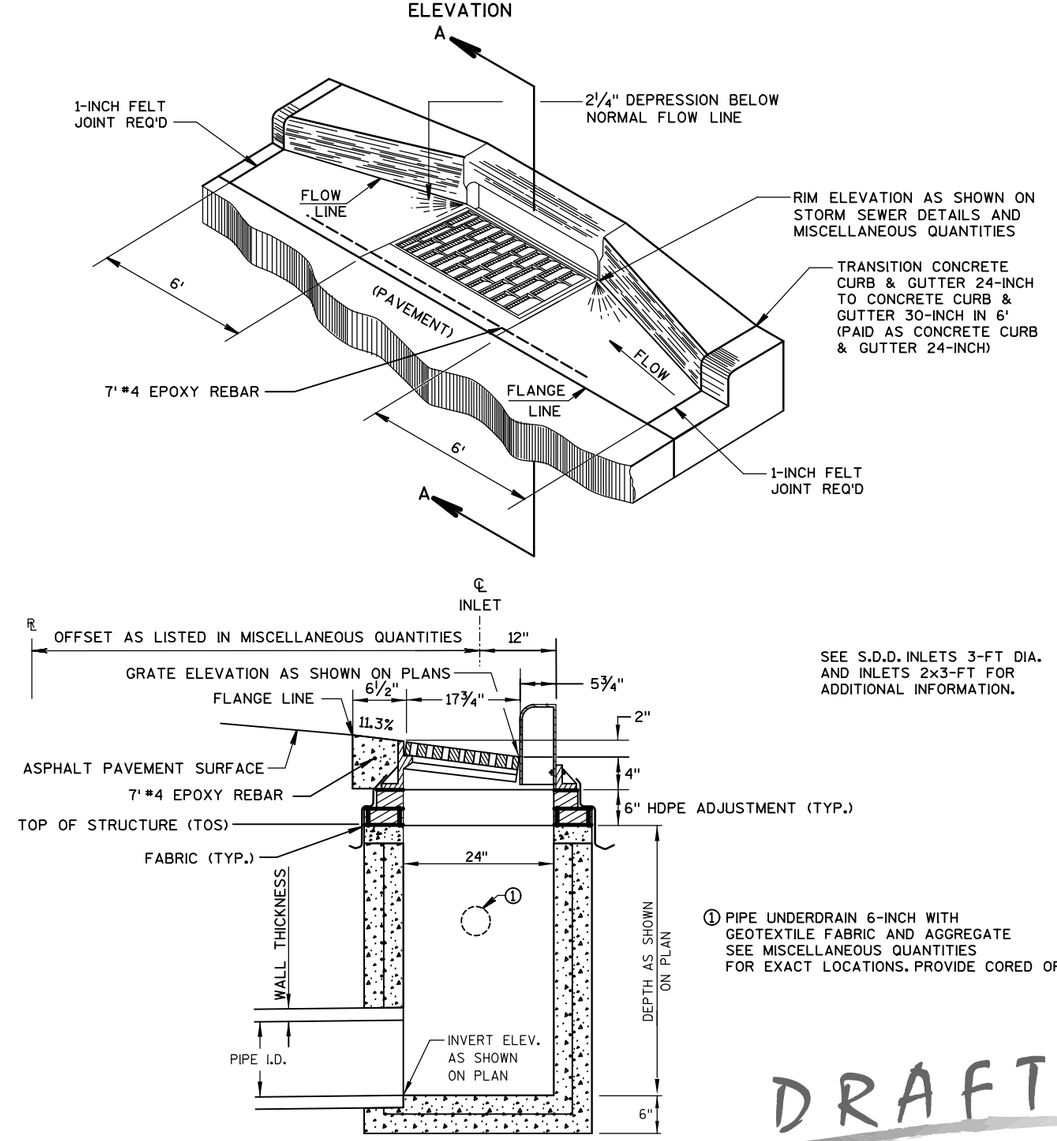

SEE S.D.D. INLETS 3-FT DIA. AND INLETS 2x3-FT FOR ADDITIONAL INFORMATION.

① PIPE UNDERDRAIN 6-INCH WITH GEOTEXTILE FABRIC AND AGGREGATE SEE MISCELLANEOUS QUANTITIES FOR EXACT LOCATIONS. PROVIDE CORED OPENING.

DRAFT

SECTION A-A

(INLET 2x3-FT WITH COVERS TYPE H SHOWN)

DETAIL OF CONCRETE CURB AND GUTTER 24-INCH TYPE D AT INLETS

DRAFT

2

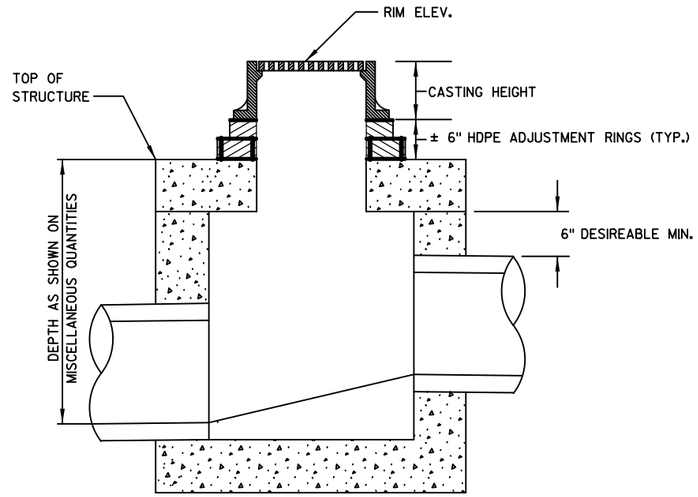

NOTE:
RIM ELEVATION IS AT FLOW LINE IF STRUCTURE HAS INLET CASTING.

DETAIL FOR COMPUTING STRUCTURE ELEVATIONS

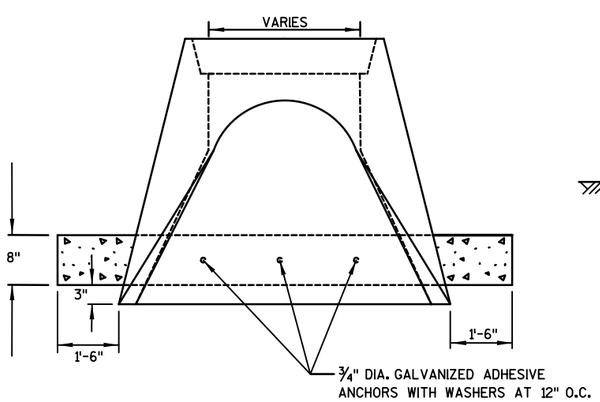

PLAN VIEW

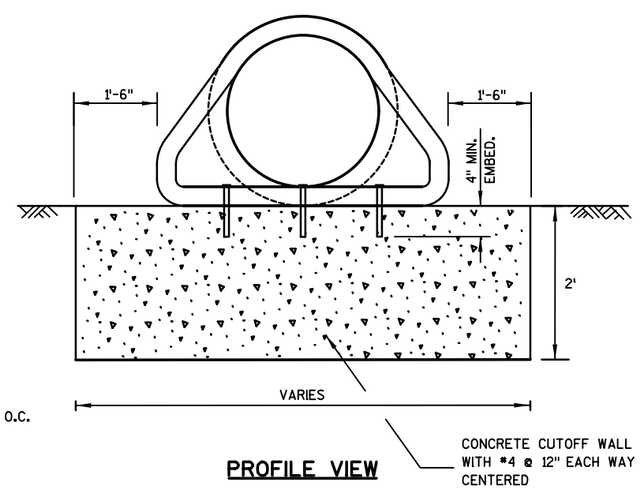

PROFILE VIEW

CONCRETE CUTOFF WALL

2

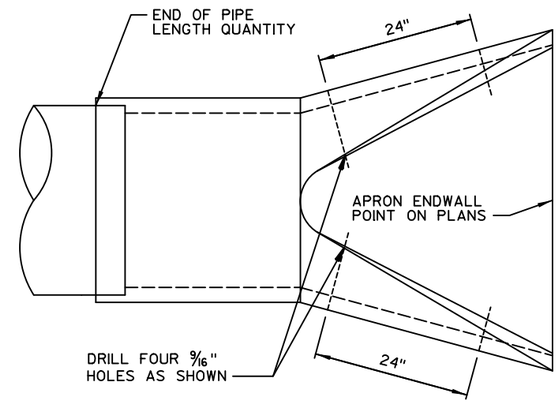

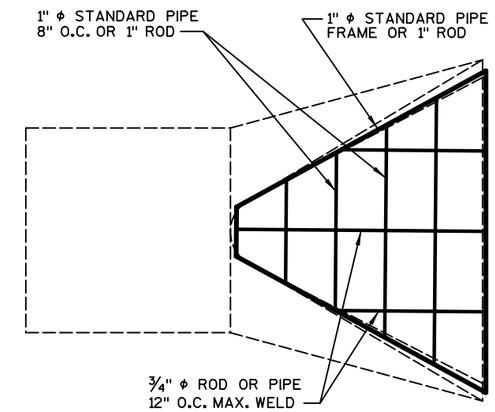

AT EACH PIPE

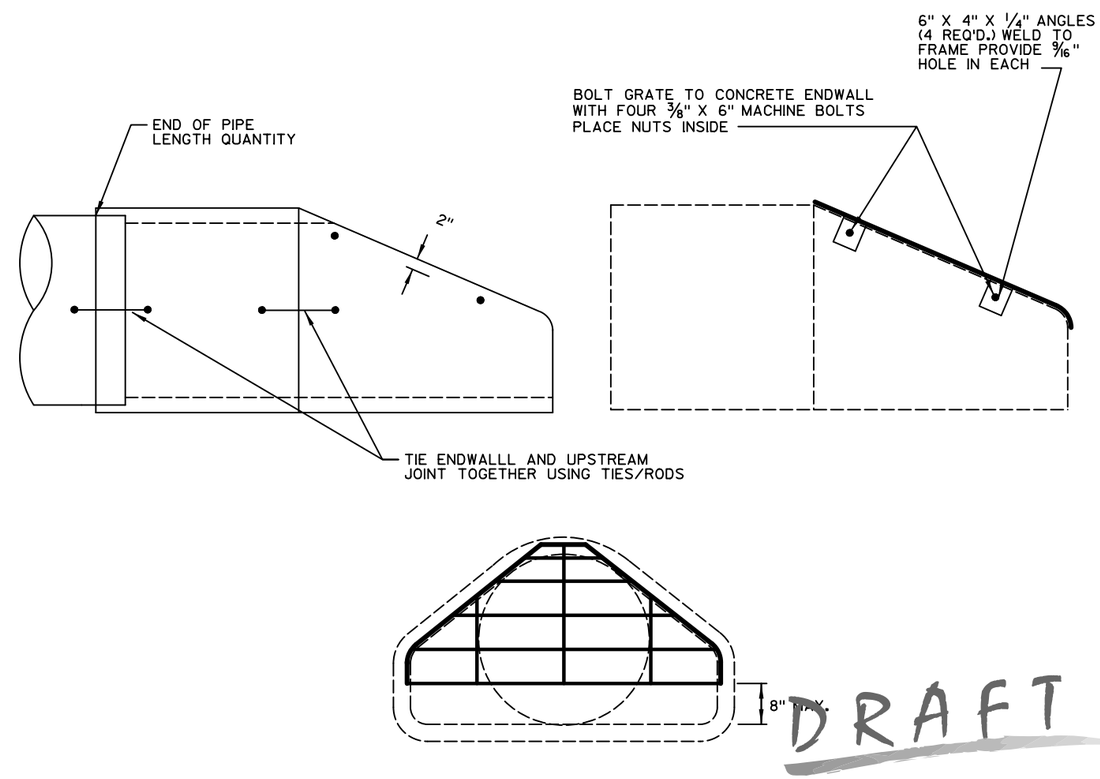

DRAFT

PIPE GRATE DETAIL

PROJECT NO:5849-02-02	HWY:CTH PD	COUNTY:DANE	CONSTRUCTION DETAILS - STORM SEWER & PIPE GRATES	SHEET 17	E

DRAFT

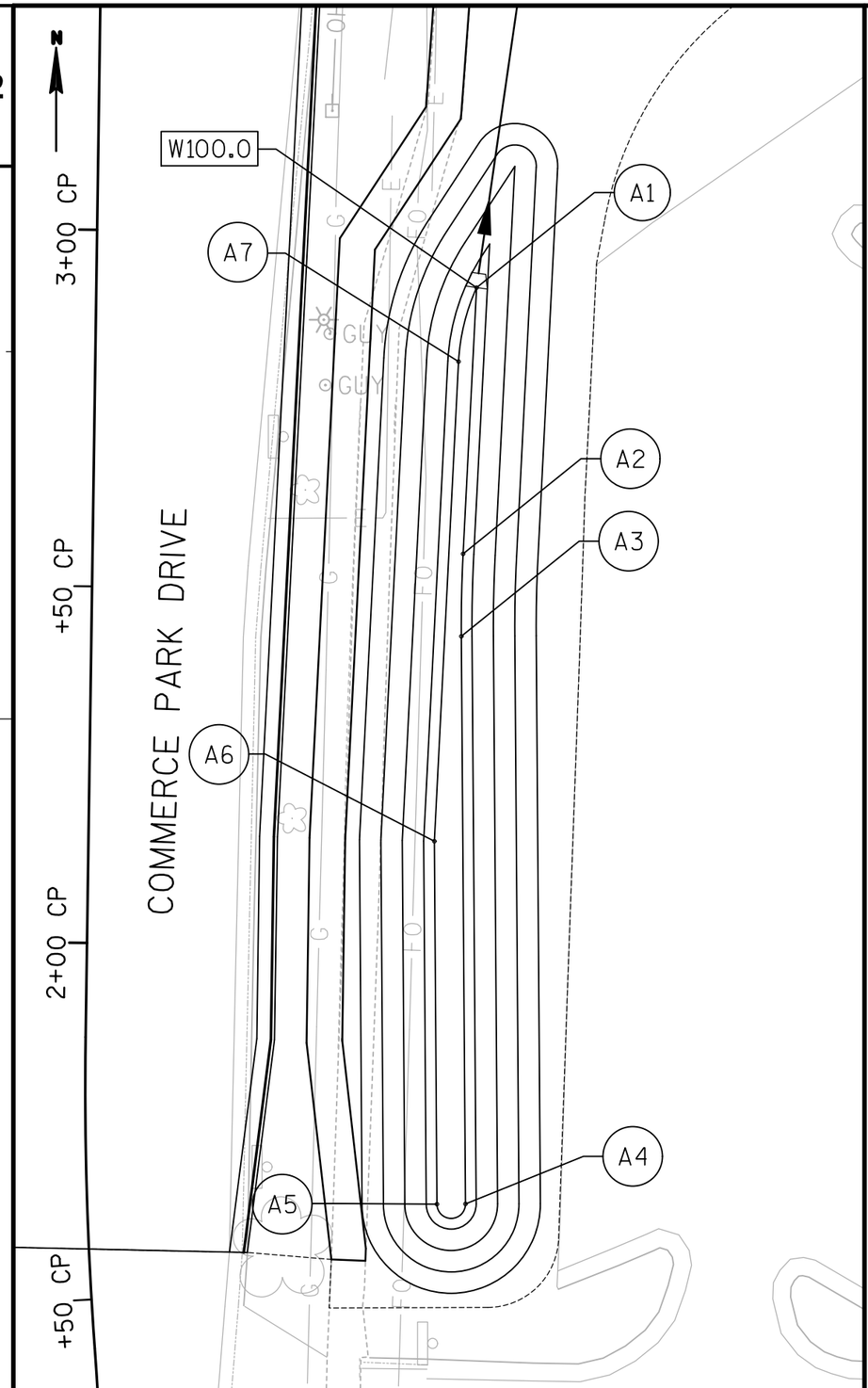

POND LAYOUT COORDIANTES		
POINT	NORTHING	EASTING
A1	461106.869	798961.661
A2	461069.549	798959.769
A3	461057.988	798959.518
A4	460978.391	798960.089
A5	460978.362	798956.089
A6	461029.253	798955.724
A7	461096.495	798959.133

DRAFT

PROJECT NO:5849-02-02	HWY:CTH PD	COUNTY:DANE	CONSTRUCTION DETAILS - POND A	SHEET 18	E

DRAFT

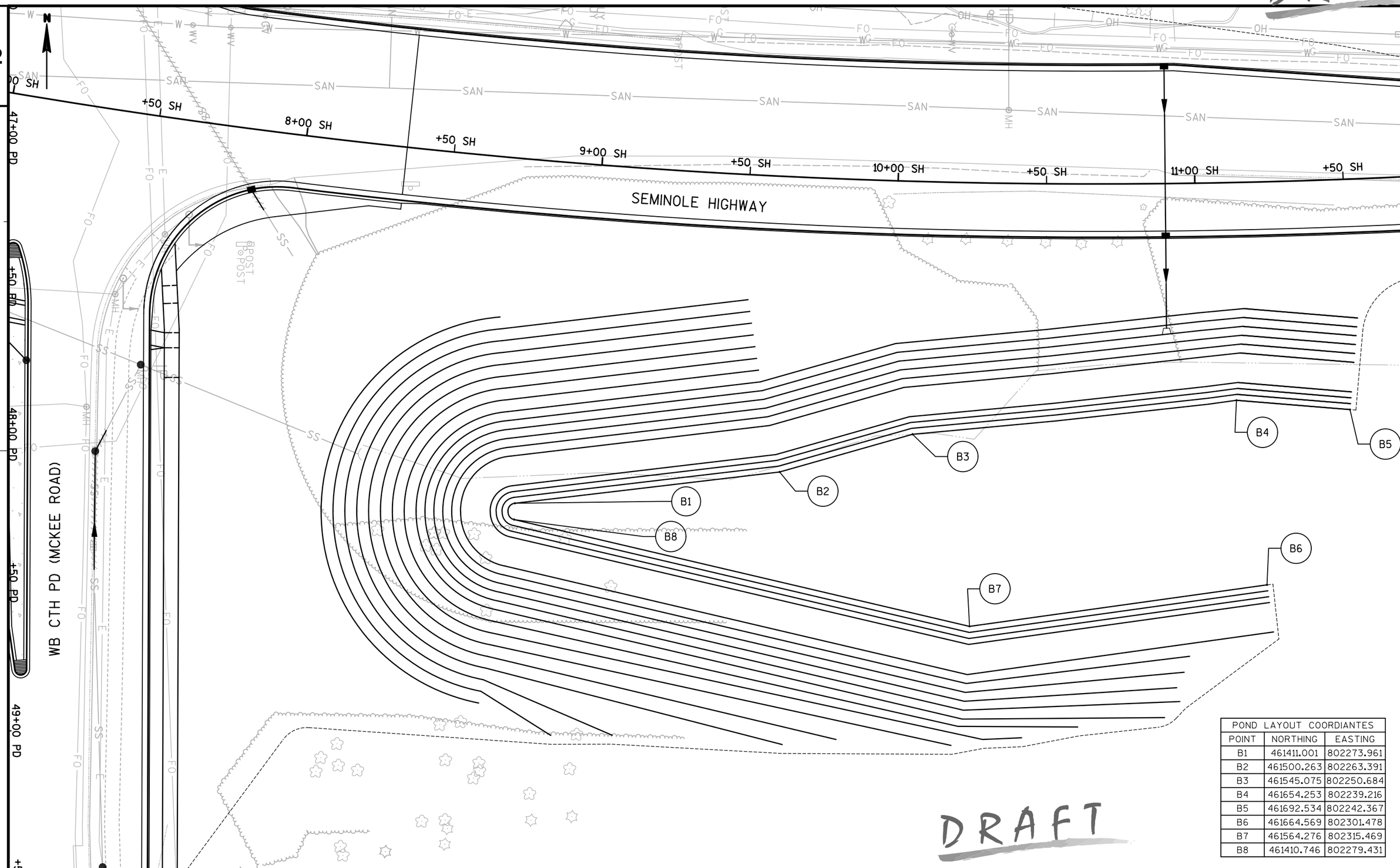

POND LAYOUT COORDIANTES		
POINT	NORTHING	EASTING
B1	461411.001	802273.961
B2	461500.263	802263.391
B3	461545.075	802250.684
B4	461654.253	802239.216
B5	461692.534	802242.367
B6	461664.569	802301.478
B7	461564.276	802315.469
B8	461410.746	802279.431

PROJECT NO:5849-02-02	HWY:CTH PD	COUNTY:DANE	CONSTRUCTION DETAILS - POND B	SHEET 19	E

DRAFT

2

THE SPACING BETWEEN THE CROSSBARS IS DETERMINED IN THE FIELD AND VARIES BETWEEN 24 AND 48 INCHES SO THAT NO CROSSBAR IS PLACED IN THE MAIN WHEEL TRACK AREA.

IN NO CASE SHALL THE CROSSBAR BE PLACED IN OR NEXT TO THE GUTTER SECTION.

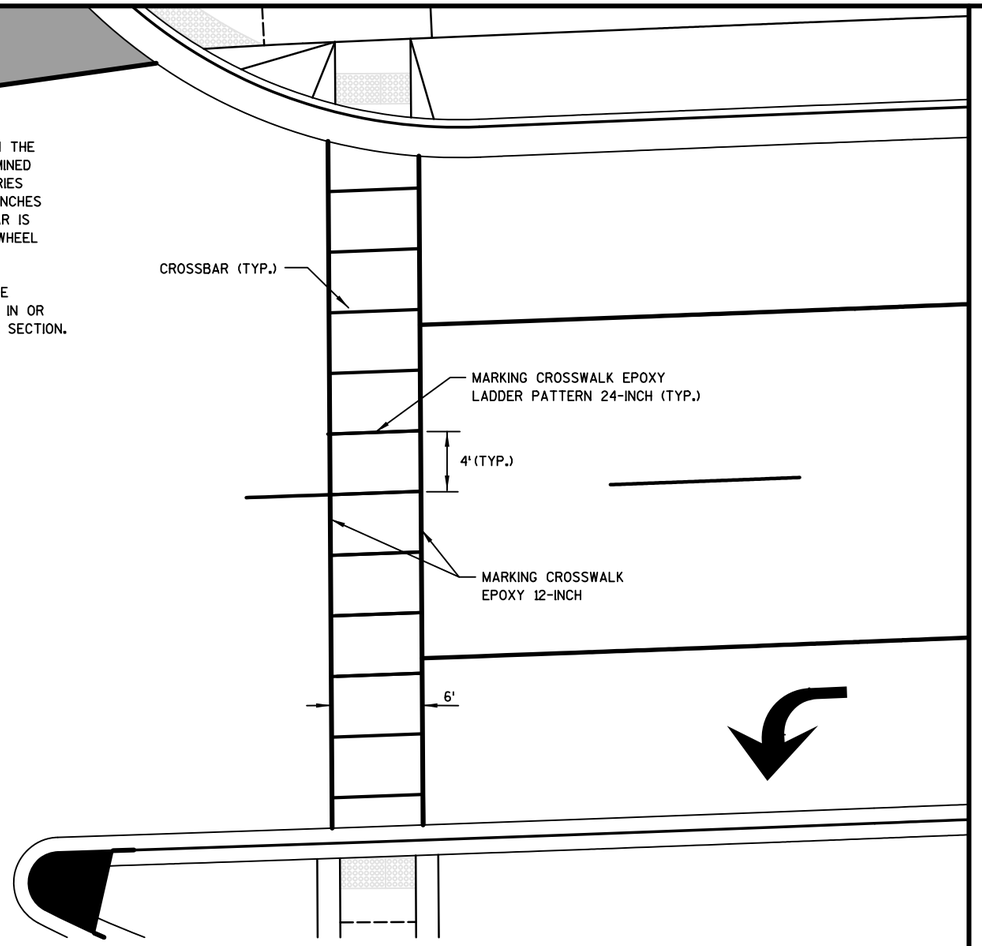

LADDER CROSSWALK PAVEMENT MARKING DETAIL

(SEE PAVEMENT MARKING PLAN FOR LOCATIONS)

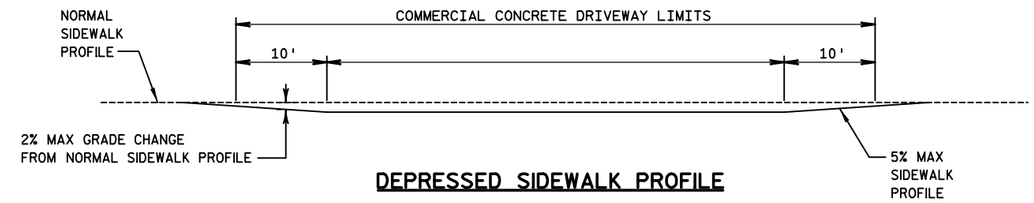

DEPRESSED SIDEWALK PROFILE

DRIVEWAY CONSTRUCTION NOTES:

½" EXPANSION JOINT FILLER

PROVIDE CONTRACTION JOINT FOR CONCRETE DRIVEWAYS WIDER THAN 14 FEET.

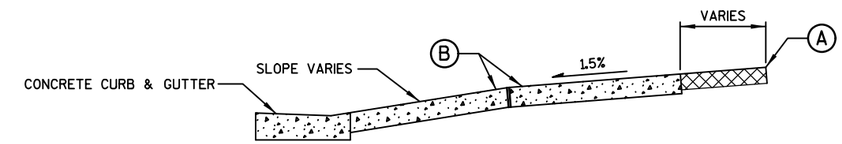

SECTION A-A

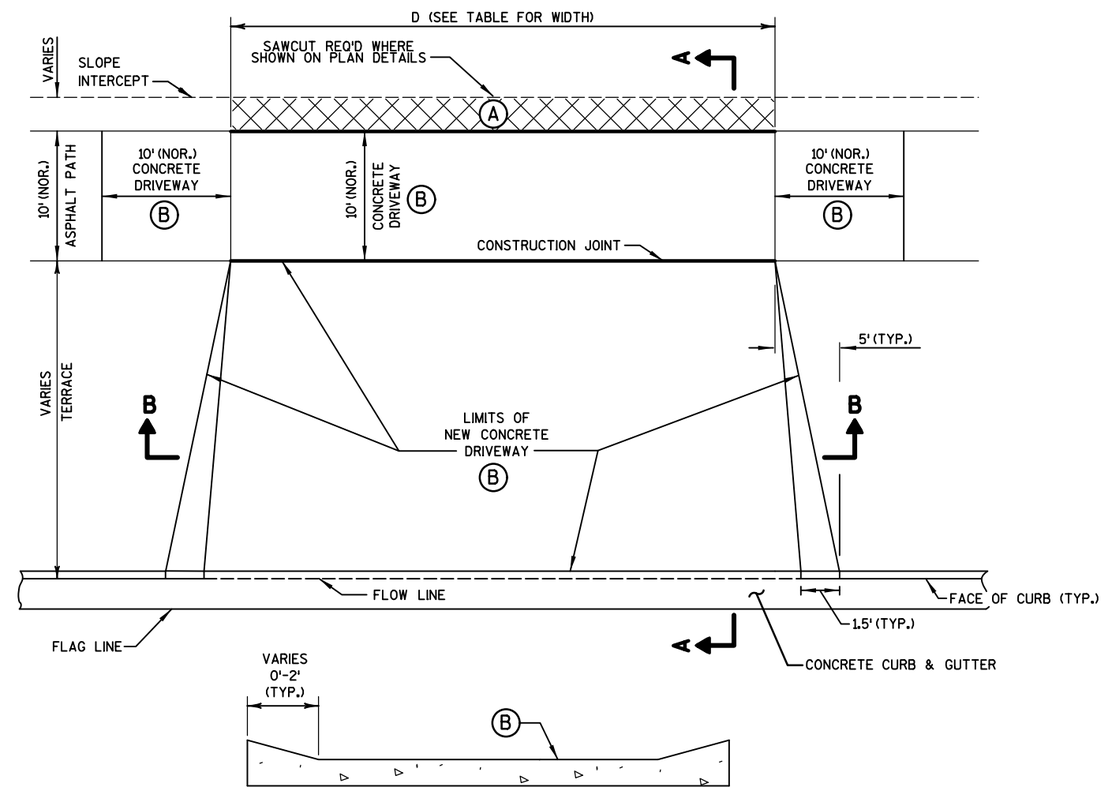

SECTION B-B

URBAN DRIVEWAY DETAIL

(SEE PLAN AND PROFILES AND URBAN DRIVEWAY TABLE AT RIGHT FOR LOCATIONS)

(A) THIS AREA TO BE REPLACED IN KIND AS NOTED IN TABLE BELOW AND ON PLAN DETAILS. PLACE CONCRETE DRIVEWAY OVER 6" BASE AGGREGATE DENSE 1¼-INCH. PLACE ASPHALTIC SURFACE DRIVEWAYS AND FIELD ENTRANCES OVER 11" BASE AGGREGATE DENSE 1¼-INCH.

(B) SEE TABLE BELOW AND PLAN DETAILS FOR CONCRETE DRIVEWAY THICKNESS AT DRIVEWAYS. PLACE CONCRETE DRIVEWAY OVER 6" BASE AGGREGATE DENSE 1¼-INCH.

URBAN DRIVEWAY TABLE

ROAD	STATION	LOCATION	D (DRIVEWAY WIDTH AT SIDEWALK OPENING) (FT)	(A) PAVEMENT MATERIAL	(A) PAVEMENT THICKNESS (IN)	(B) PAVEMENT THICKNESS (IN)
CTH PD	31+70 PD	LT	20	ASPHALTIC SURFACE DRIVEWAYS AND FIELD ENTRANCES	4	7
	35+11 PD	RT	21	ASPHALTIC SURFACE DRIVEWAYS AND FIELD ENTRANCES	4	7

DRAFT

PROJECT NO: 5849-02-02	HWY: CTH PD	COUNTY: DANE	CONSTRUCTION DETAILS - LADDER CROSSWALK AND DRIVEWAYS	SHEET 20	E

DRAFT

2

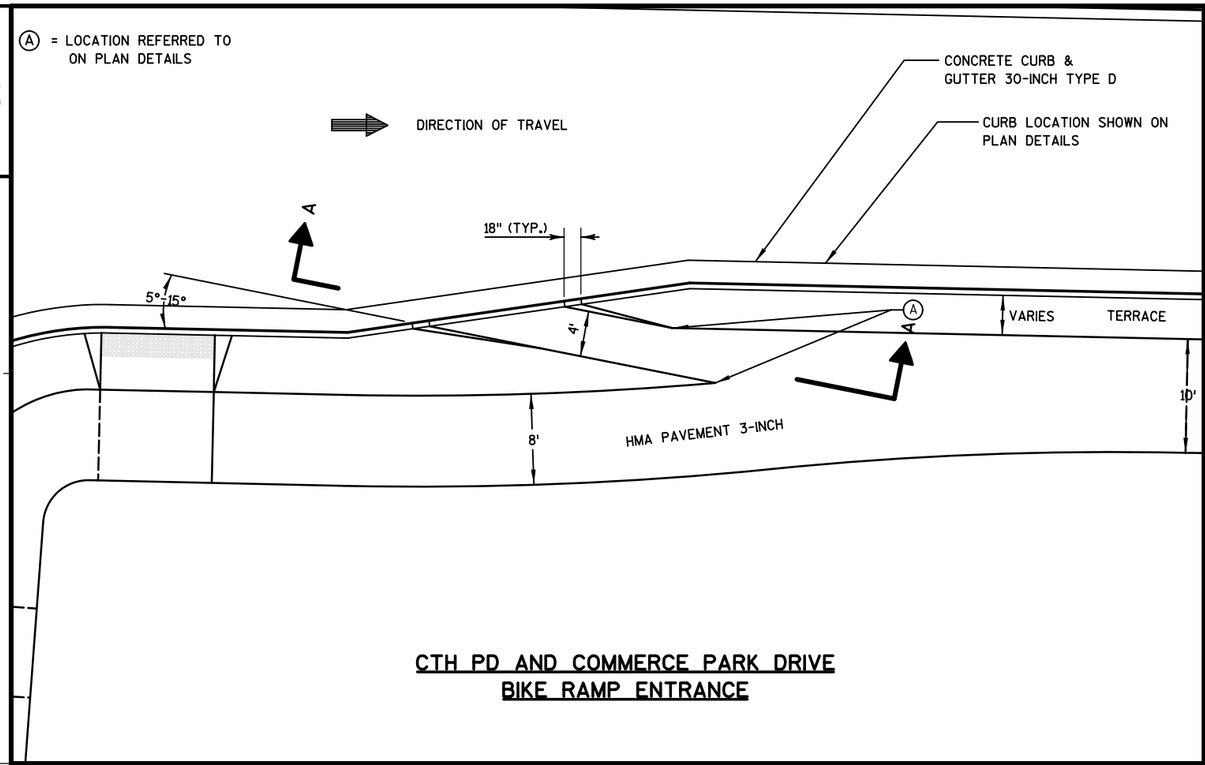

CTH PD AND COMMERCE PARK DRIVE
BIKE RAMP ENTRANCE

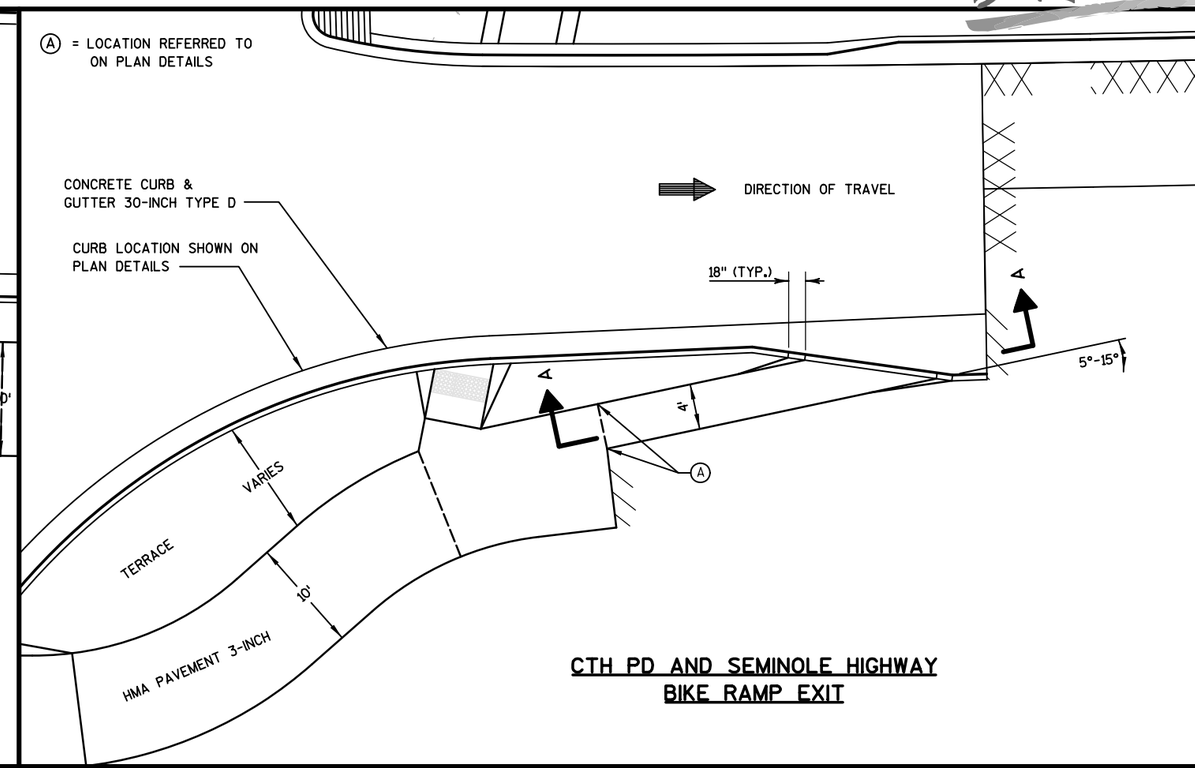

CTH PD AND SEMINOLE HIGHWAY
BIKE RAMP EXIT

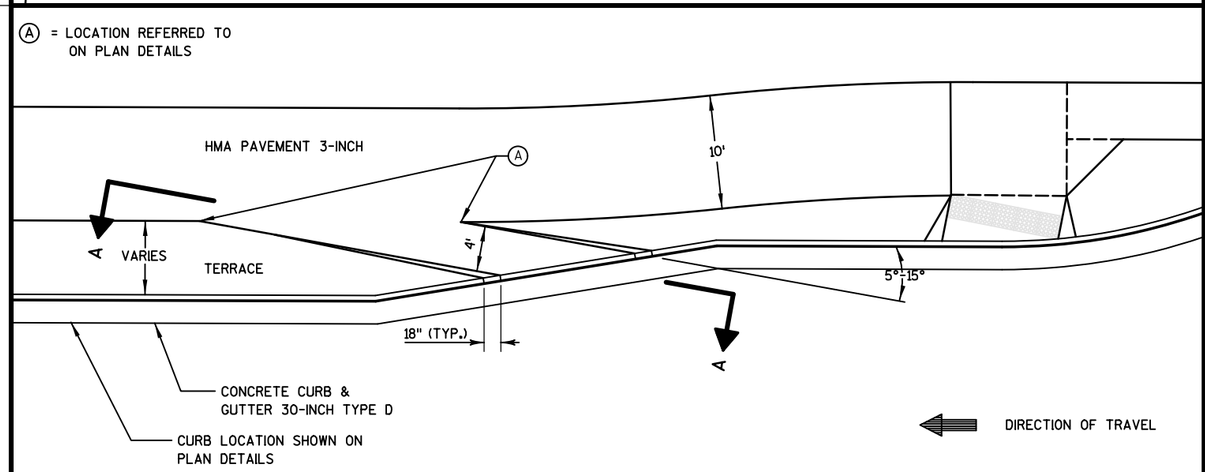

CTH PD AND SEMINOLE HIGHWAY
BIKE RAMP ENTRANCE

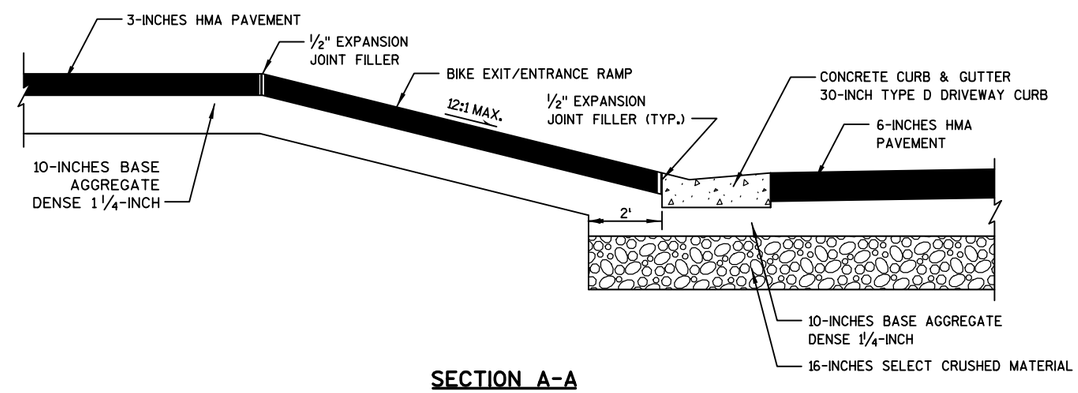

SECTION A-A

TYPICAL BIKE RAMP ENTRANCE & EXIT DETAILS
(SEE PLAN DETAILS FOR LOCATIONS)

DRAFT

PROJECT NO:5849-02-02	HWY:CTH PD	COUNTY:DANE	CONSTRUCTION DETAILS - BIKE RAMP ENTRANCE AND EXIT	SHEET 21	E

DRAFT

2

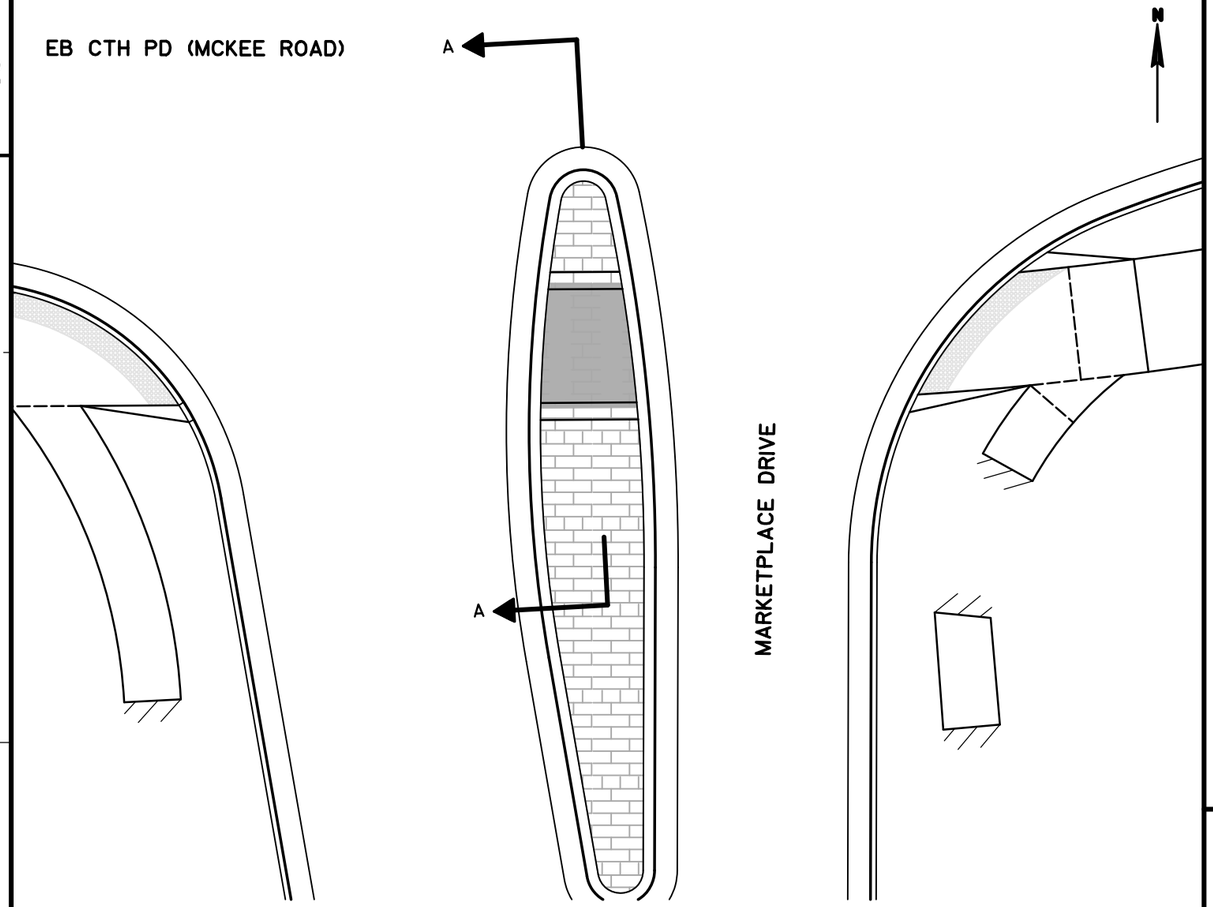

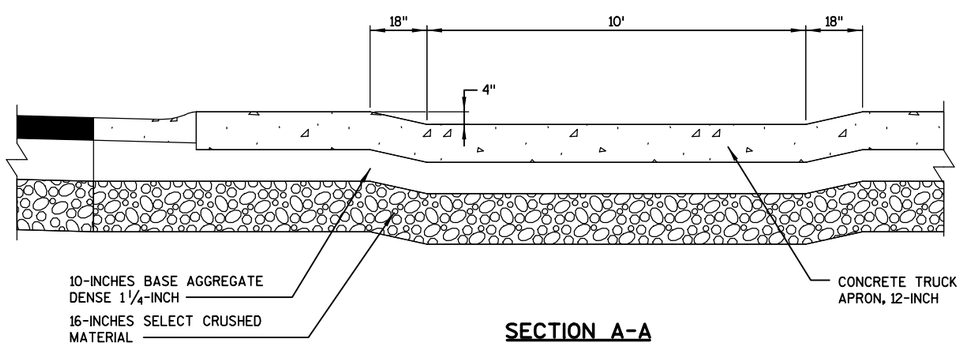

SECTION A-A

CONCRETE TRUCK APRON AT MARKETPLACE DRIVE DETAIL

2

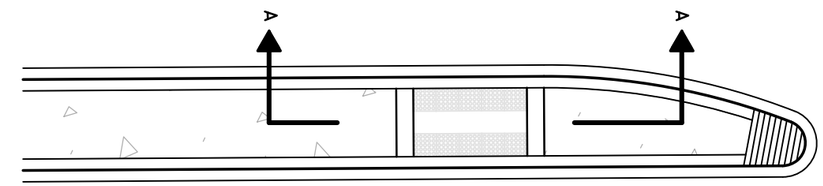

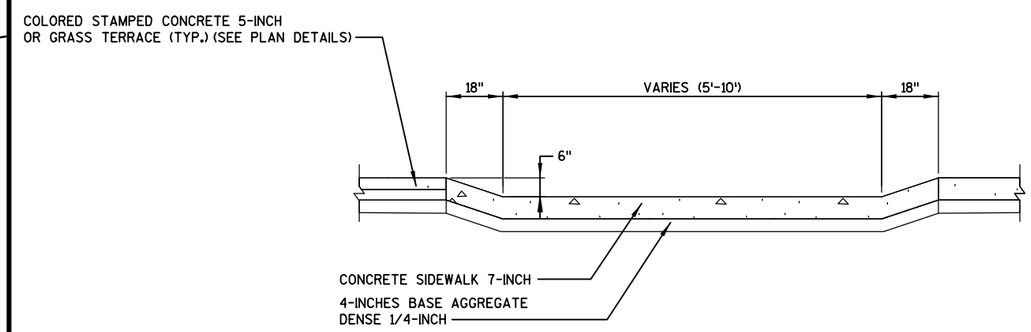

MEDIAN CURB RAMP DETAIL

(SEE PLAN DETAILS FOR MEDIAN CURB LOCATIONS)

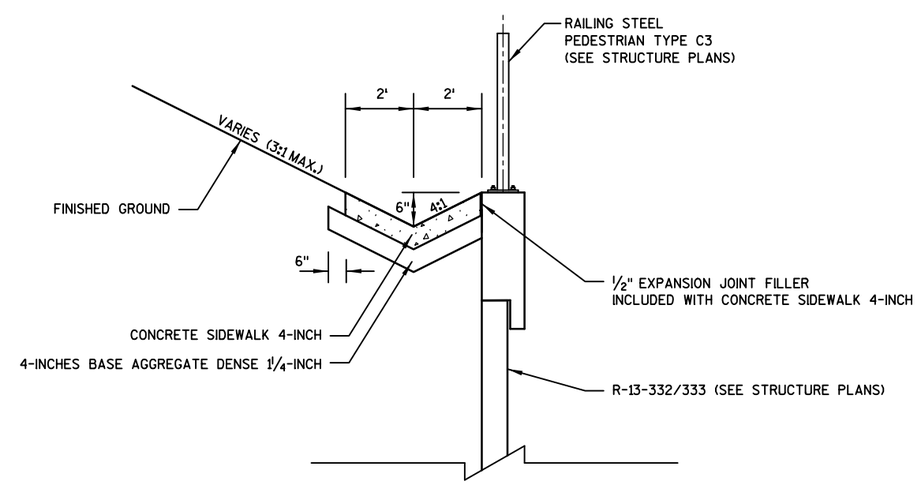

R-13-332 & R-13-333 CONCRETE SWALE DETAIL

DRAFT

PROJECT NO:5849-02-02	HWY:CTH PD	COUNTY:DANE	CONSTRUCTION DETAILS - TRUCK APRON, MEDIAN CURB RAMP, SWALE	SHEET 22	E

DRAFT

2

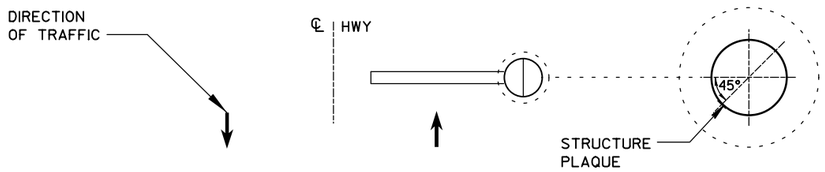

MONOTUBE SUPPORT (ON SHOULDER)

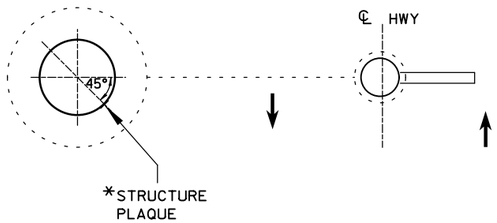

MONOTUBE SUPPORT (IN MEDIAN)

* WHEN MONOTUBES FACE TRAFFIC IN ONE DIRECTION, THE PLAQUE SHALL FACE TRAFFIC IN THE SAME DIRECTION. WHEN MONOTUBES ARE FACING TRAFFIC IN BOTH DIRECTIONS, THE PLAQUE SHALL FACE TRAFFIC IN THE CARDINAL DIRECTION.

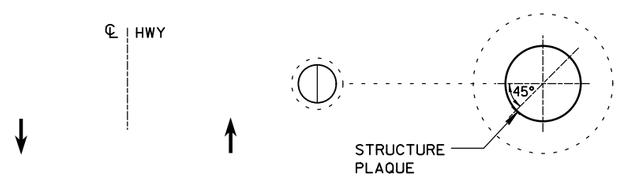

HIGH MAST LIGHT SUPPORT

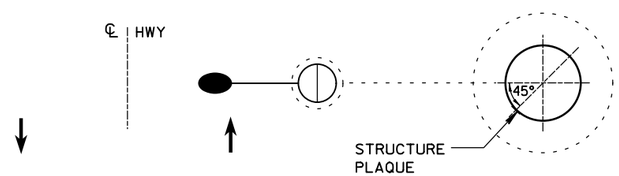

LIGHT POLE (ON SHOULDER)

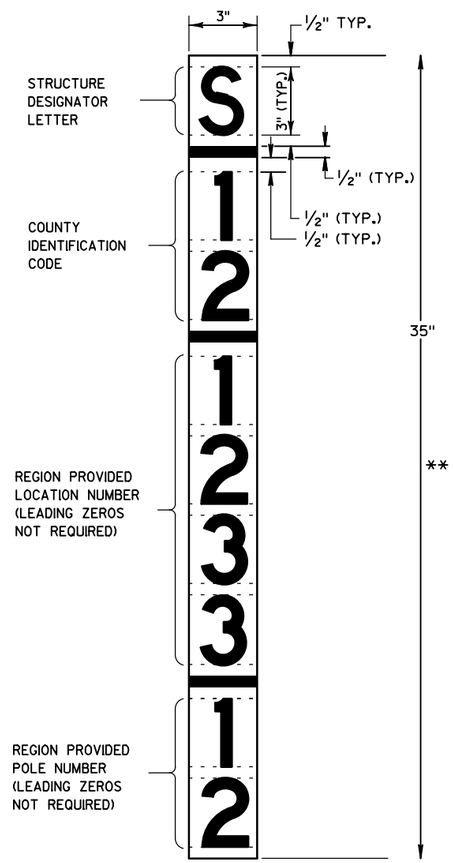

** LETTER "L" UTILIZED FOR LIGHTING STRUCTURES.
LETTER "S" UTILIZED FOR MONOTUBE STRUCTURES.
LETTER "G" UTILIZED FOR RAMP GATE STRUCTURES.

GENERAL NOTES:

DETAILS OF CONSTRUCTION AND WORKMANSHIP NOT SHOWN IN THIS DRAWING SHALL CONFORM TO THE PERTINENT REQUIREMENTS OF THE CONTRACT.

PLAQUES SHALL BE INCIDENTAL TO ALL NEW INSTALLATIONS.

MOUNTING HEIGHT ON LIGHT POLES AND MONOTUBE POLES SHALL BE APPROXIMATELY 5.0' ABOVE CURB OR SHOULDER. ADJUST IF IT IS KNOWN THAT REQUIRED TRAFFIC SIGNS WILL OBSTRUCT.

SEE RAMP GATE DETAIL FOR PLACEMENT OF PLAQUE ON RAMP GATE POLE.

PLAQUE MATERIALS:

FACE - WHITE, SELF-ADHESIVE VINYL SHEETING, NON-RETROREFLECTIVE

LINES - BLACK, ½" WIDE, SELF-ADHESIVE

CHARACTERS:- BLACK, SELF ADHESIVE, SERIES "D", SIZE AS SHOWN.

DRAFT

STRUCTURE IDENTIFICATION PLAQUES
LIGHT, MONOTUBE & RAMP GATE POLES

SW REGION - MADISON

PROJECT NO:5849-02-02	HWY:CTH PD	COUNTY:DANE	CONSTRUCTION DETAILS - MONOTUBE IDENTIFICATION PLAQUES	SHEET 23	E

DRAFT

2

NOTE: OFFSETS TO THE ATC 69KV AND 138KV OVERHEAD FACILITIES ARE PROVIDED FOR INFORMATION ONLY AND SHALL BE FIELD VERIFIED BY THE CONTRACTOR.

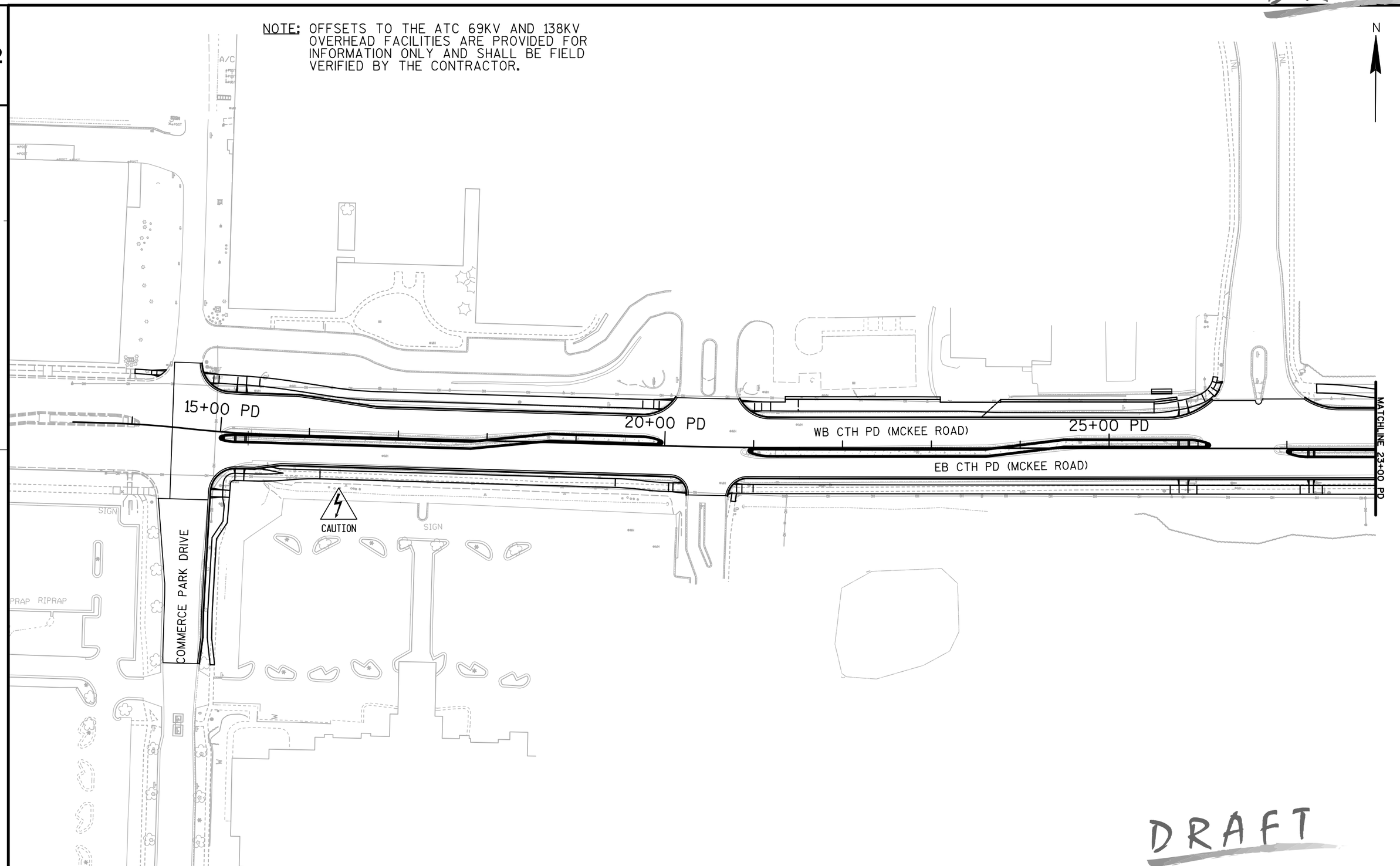

DRAFT

2

PROJECT NO:5849-02-02	HWY:USH 18	COUNTY:DANE	CONSTRUCTION DETAILS - STRUCTURE OFFSETS TO ATC LINES	SHEET 24	E

DRAFT

2

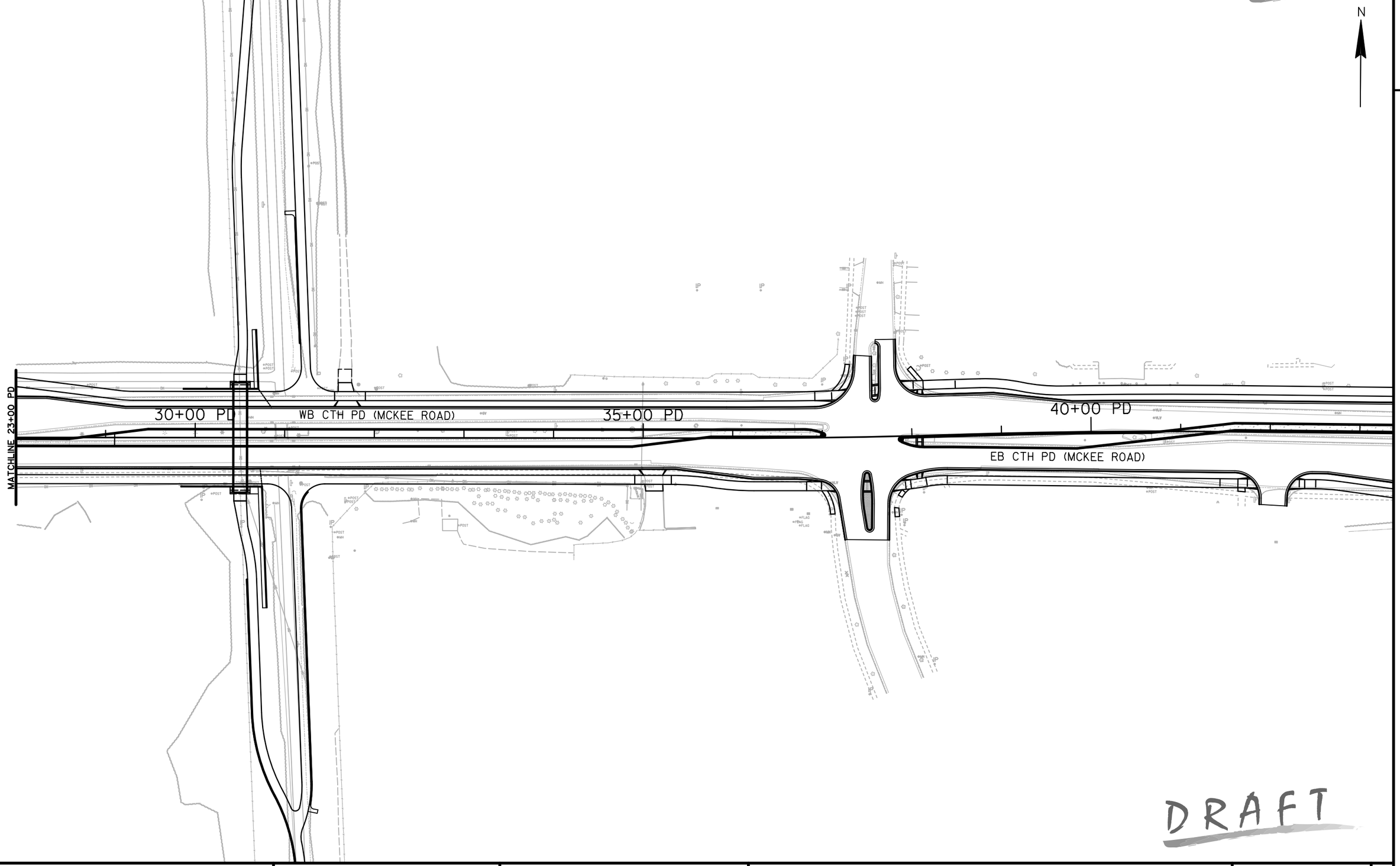

2

DRAFT

PROJECT NO:5849-02-02	HWY:USH 18	COUNTY:DANE	CONSTRUCTION DETAILS - STRUCTURE OFFSETS TO ATC LINES	SHEET 25	E

DRAFT

2

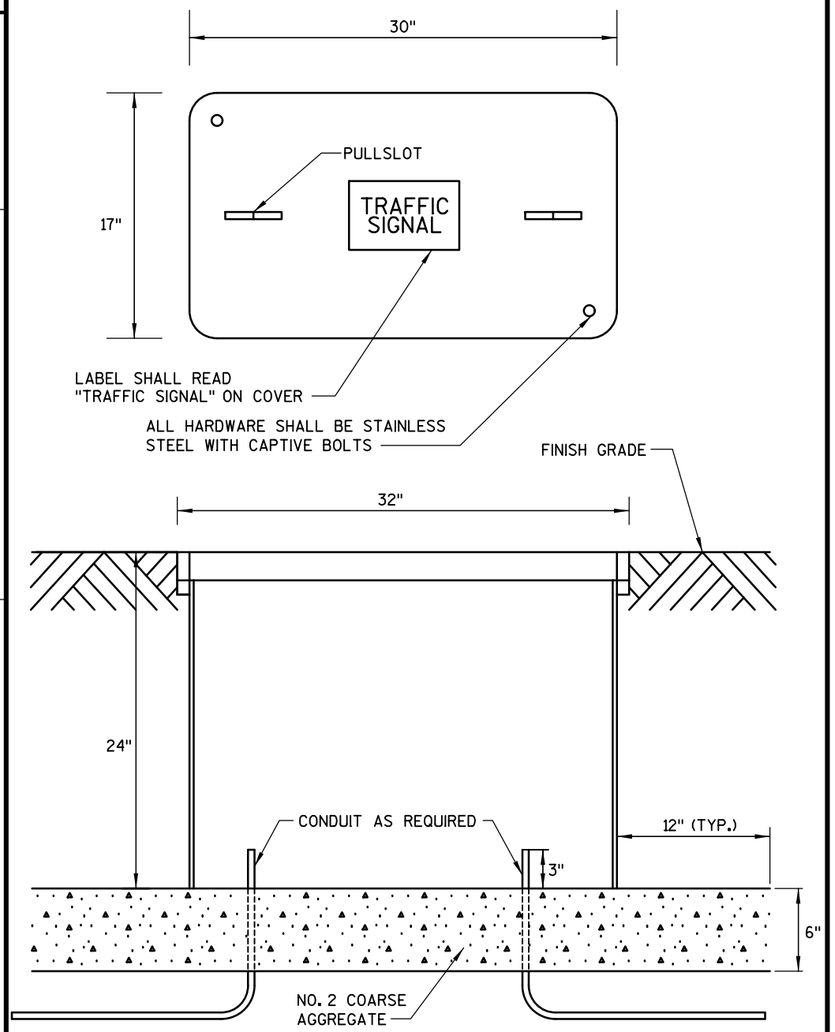

PULL BOX TYPE I

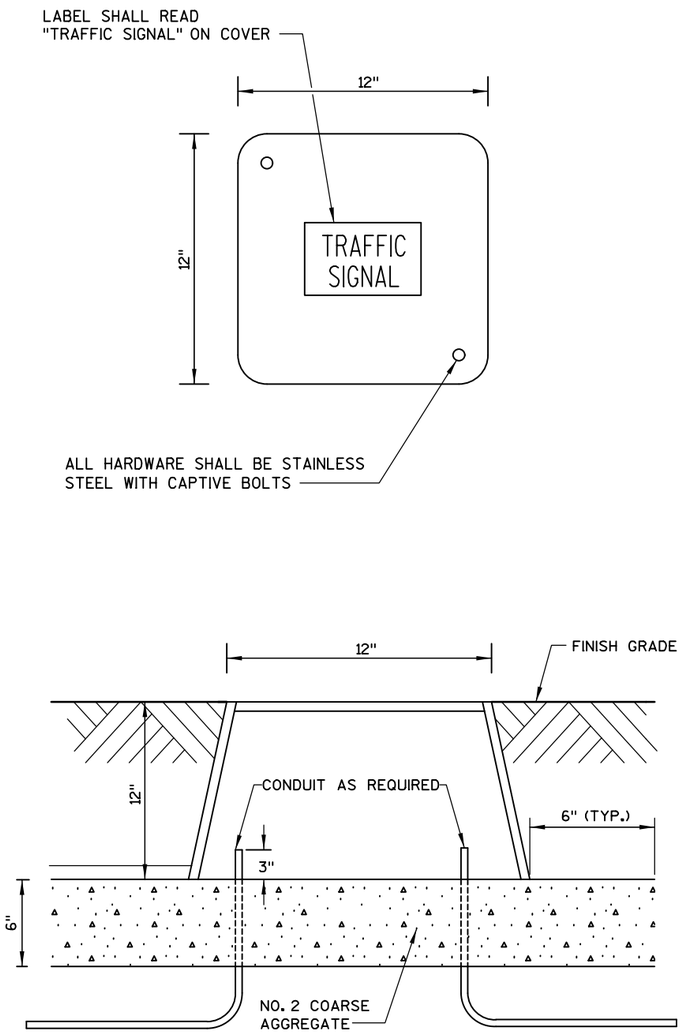

PULL BOX TYPE III

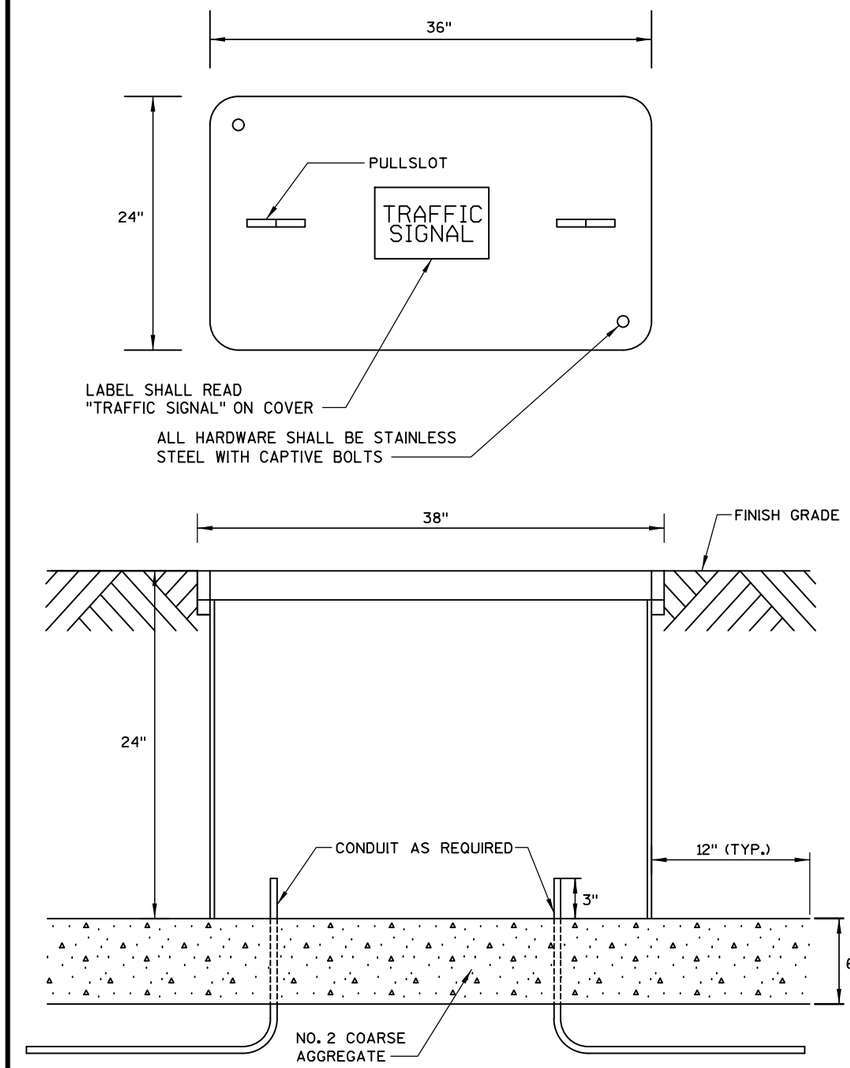

PULL BOX TYPE V

DRAFT

PROJECT NO:5849-02-02	HWY:CTH PD	COUNTY:DANE	CONSTRUCTION DETAILS - PULL BOXES	SHEET 26	E

DRAFT

2

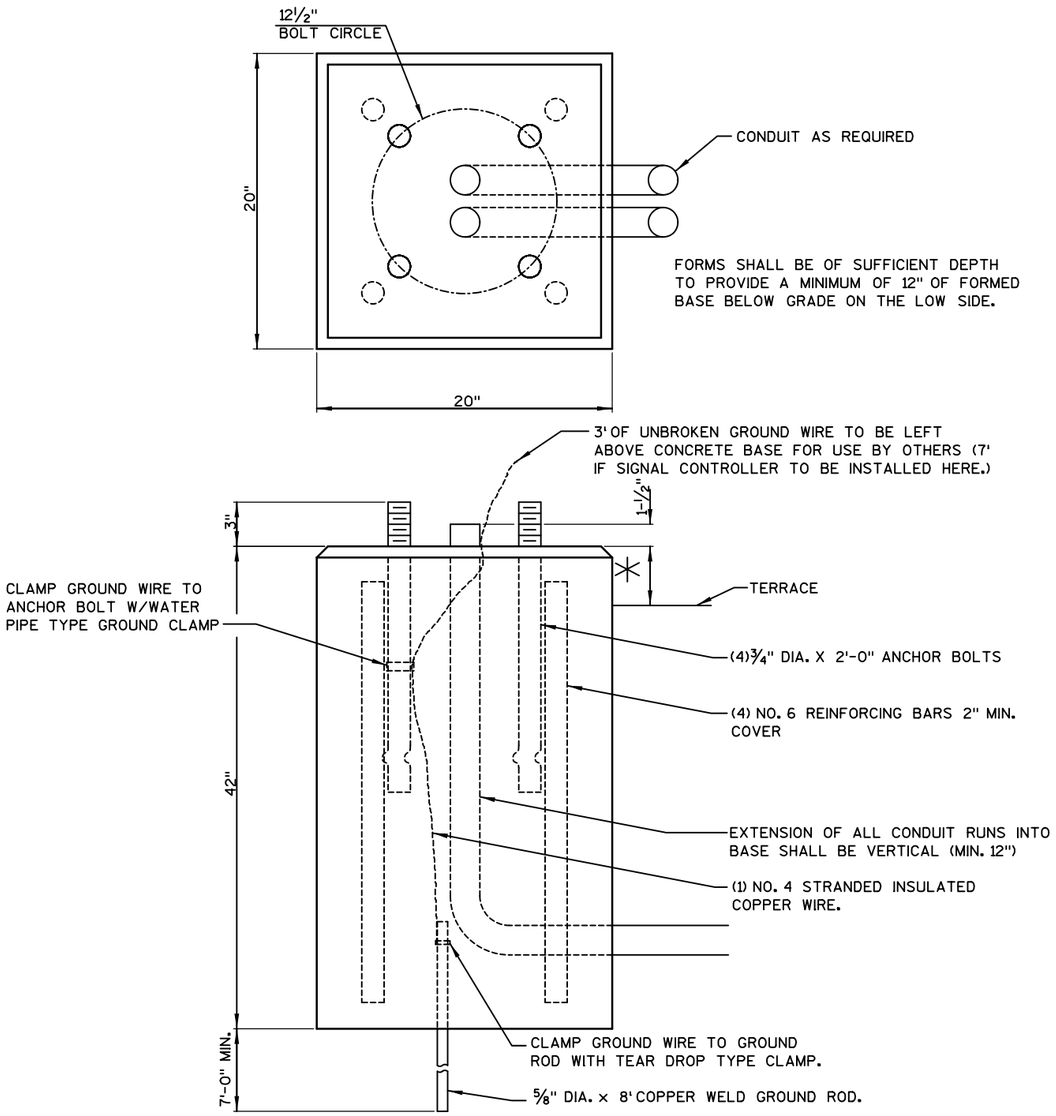

CONCRETE BASE TYPE G

✳ = 4" ±½" FOR GRASS TERRACE
2" ±½" FOR CONCRETE TERRACE

CONTROL CABINET BASE TYPE	DIMENSIONS				C.Y. CONCRETE (APPROX.)
	L	W	J	K	
TYPE P	48"	30"	16"	24"	1.2

GENERAL NOTES

1. DETAILS OF CONSTRUCTION, MATERIALS AND WORKMANSHIP NOT SHOWN ON THIS DRAWING SHALL CONFORM TO THE PERTINENT REQUIREMENTS OF THE CONTRACT.
2. ALL CONDUIT SHALL BE PVC, SCHEDULE 40
3. DEPTH OF CONDUIT EXITING THE BASE SHALL MATCH THE DEPTH SPECIFIED FOR CONDUIT INSTALLATION.
4. ANY EXCEPTION TO THE MAXIMUM DEPTH SHALL BE ONLY WITH THE WRITTEN APPROVAL OF THE ENGINEER.
5. CONTROL CABINET BASE TOP SURFACES SHALL BE TROWEL FINISHED AND LEVEL.
6. MAINTENANCE PLATFORM SHALL NOT BE INSTALLED WHEN THE SURROUNDING AREA IS PAVED.
7. MINIMUM BENDING RADIUS OF CONDUIT = 6 X THE DIAMETER.
8. ALL CONDUIT ENDS AT THE TOP OF CONCRETE BASES SHALL BE CAPPED OR PLUGGED IMMEDIATELY AFTER PLACEMENT AND BEFORE CONCRETE IS POURED. CONDUITS IN WHICH WIRE OR CABLE IS NOT BEING INSTALLED SHALL REMAIN CAPPED OR PLUGGED.
9. CONCRETE FORM DEPTH BELOW FINISHED GRADE SHALL BE 6" MINIMUM. CONCRETE FORMS SHALL BE REMOVED AFTER CONCRETE HAS SET.
10. CONDUITS SHALL EXIT THE BASE IN THE DIRECTION OF THE STRUCTURE IT IS TERMINATING INTO.
11. MAINTENANCE PLATFORM SIZE MAY VARY ON ACCOUNT OF CONDITIONS. VERIFY THE MAINTENANCE PLATFORM SIZE WITH ENGINEER PRIOR TO POURING BASE.

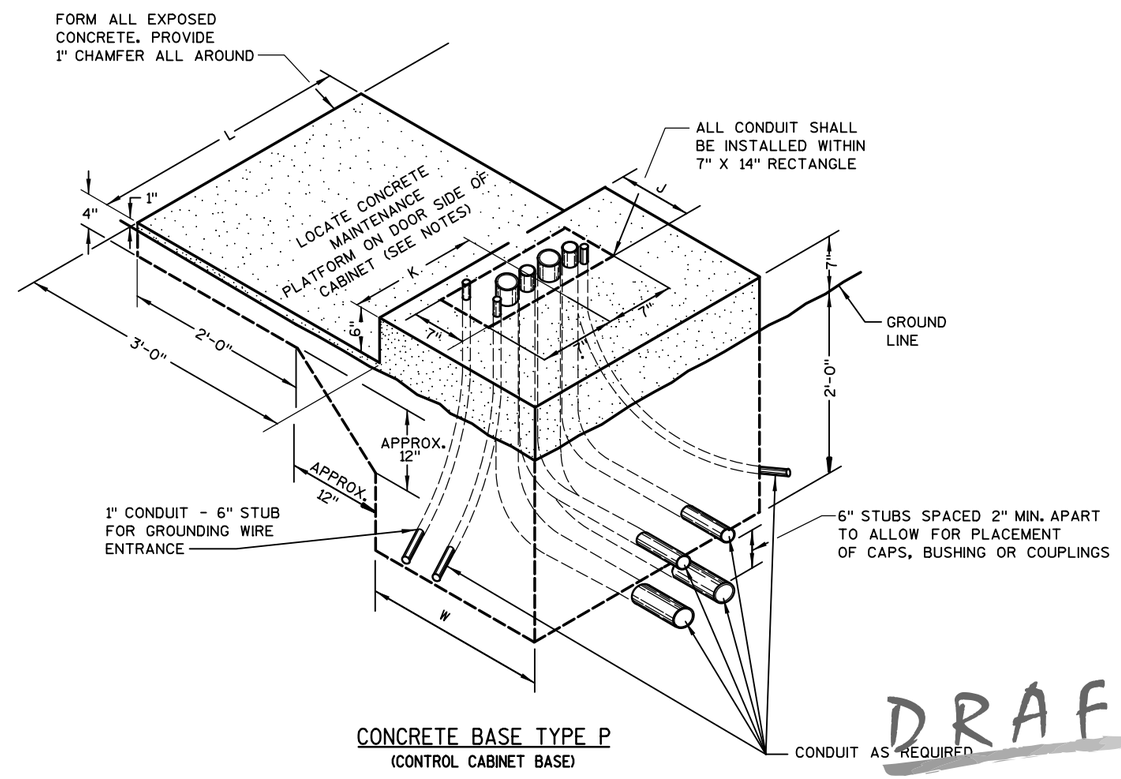

CONCRETE BASE TYPE P
(CONTROL CABINET BASE)

DRAFT

PROJECT NO:5849-02-02	HWY:CTH PD	COUNTY:DANE	CONSTRUCTION DETAILS - CONCRETE BASES	SHEET 27	E

DRAFT

2

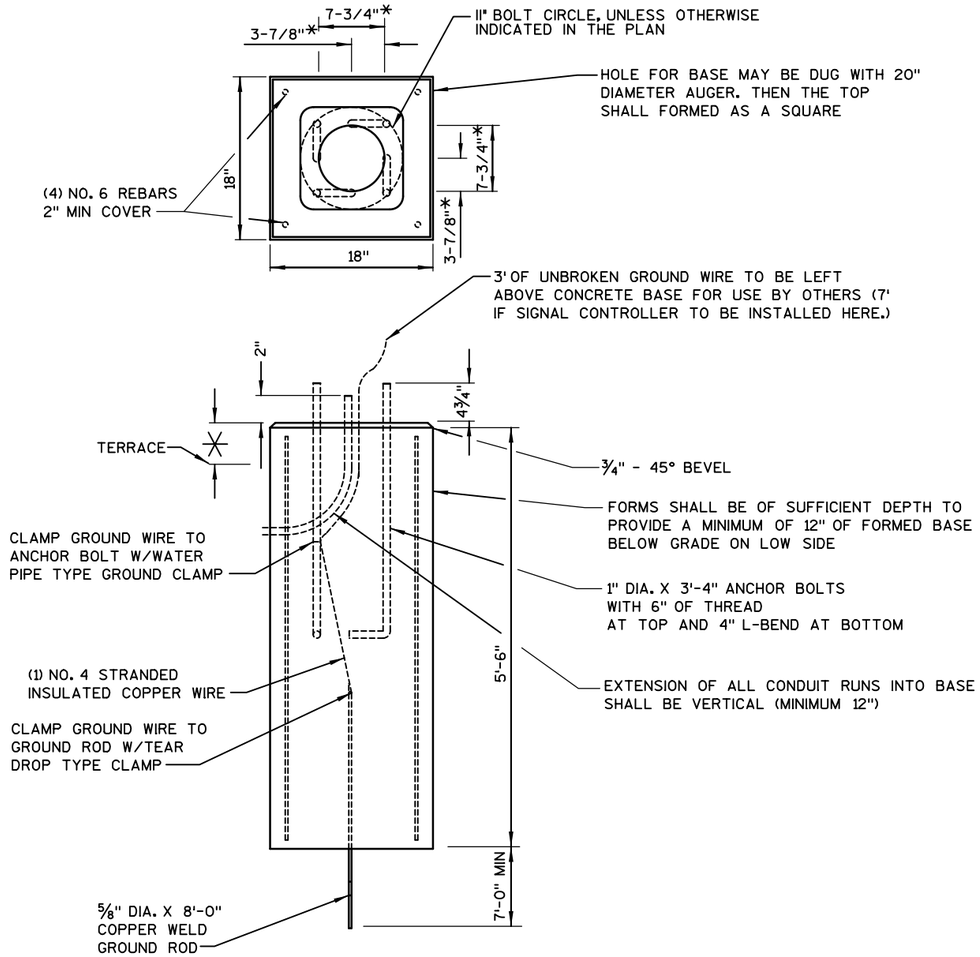

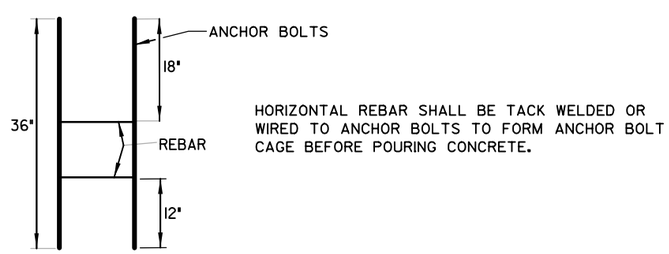

HORIZONTAL REBAR SHALL BE TACK WELDED OR WIRED TO ANCHOR BOLTS TO FORM ANCHOR BOLT CAGE BEFORE POURING CONCRETE.

* = 4" ±½" FOR GRASS TERRACE
2" ±½" FOR CONCRETE TERRACE

CONCRETE BASE TYPE LB-3

2

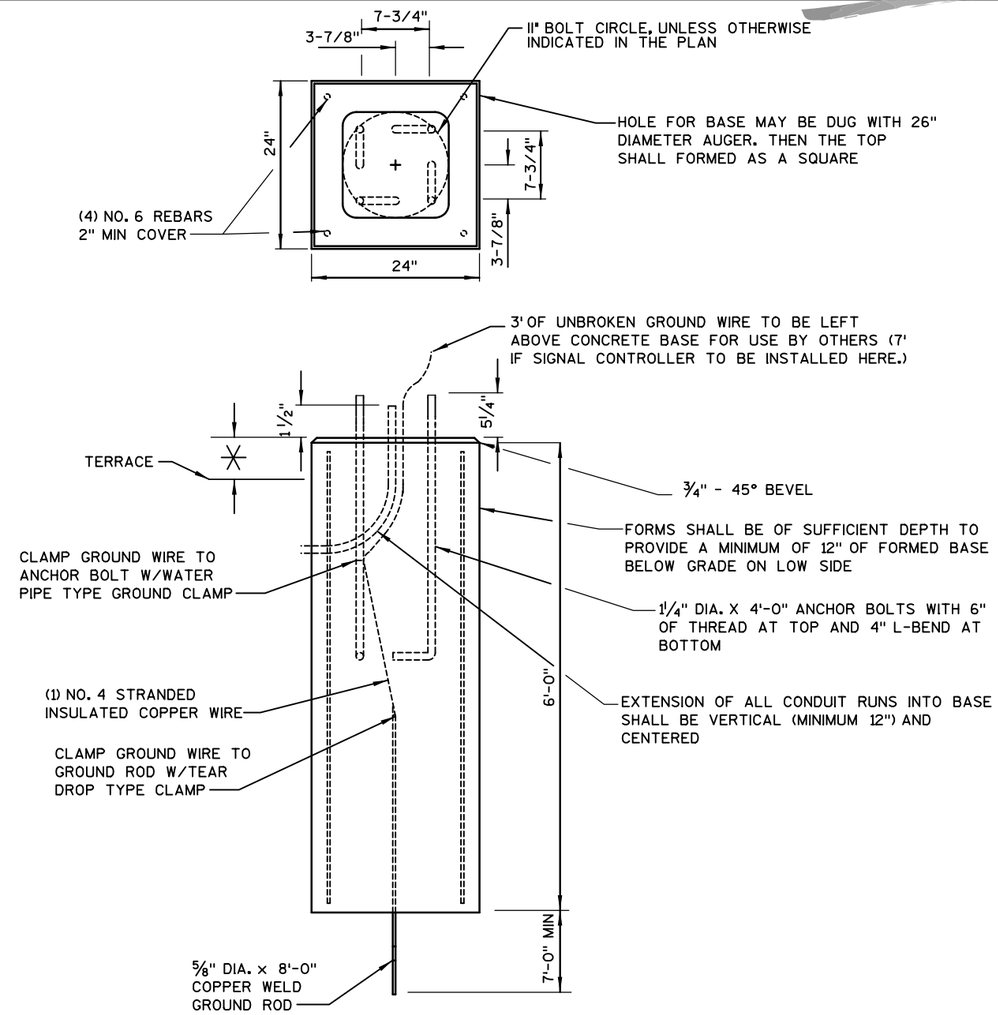

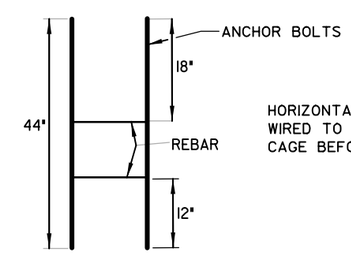

HORIZONTAL REBAR SHALL BE TACK WELDED OR WIRED TO ANCHOR BOLTS TO FORM ANCHOR BOLT CAGE BEFORE POURING CONCRETE.

* = 4" ±½" FOR GRASS TERRACE
2" ±½" FOR CONCRETE TERRACE

CONCRETE BASE TYPE LB-8

DRAFT

PROJECT NO: 5849-02-02	HWY: CTH PD	COUNTY: DANE	CONSTRUCTION DETAILS - CONCRETE BASES	SHEET 28	E

DRAFT

	STATION	OFFSET
EXPB-1	15+05	80' RT
EXPB-2	14+29	86' RT
EXPB-3	14+13	62' RT
EXPB-8	14+33	69' LT
EXPB-9	14+77	71' LT
EXPB-10	15+01	47' LT
EXPB-11	15+37	48' LT
EXPB-13	15+42	44' RT
EXPB-14	16+78	55' LT
EXPB-15	18+35	44' LT
EXSB-1	15+04	60' RT
EXSB-2	14+25	66' RT
EXSB-6	14+28	67' LT
EXSB-7	14+78	65' LT
EXSB-8	15+06	47' LT
EXSB-9	15+08	1' RT
EXSB-10	15+44	37' RT

N

LEGEND

- PULL BOX
- LUMINAIRE
- SIGNAL HEAD
- SIGNAL CABINET
- (XX) TRAFFIC SIGNAL HEAD WITH MAST ARM
- PEDESTRIAN HEAD WITH PUSH BUTTON
- TRAFFIC SIGNAL HEAD

(1) TO BE REMOVED BY OTHERS

GRAYSHADE ITEMS ARE TO REMAIN.

BOLD REPRESENTS ITEMS TO BE REMOVED.

(EXPB-X) REMOVING PULL BOX REQ'D

(EXSB-X) REMOVING CONCRETE BASES REQ'D

*BASE REMOVAL WILL BE PAID AS "REMOVING CONCRETE BASES". PULL BOX REMOVAL WILL BE PAID AS "REMOVING PULL BOXES". ABOVE GROUND SIGNAL EQUIPMENT REMOVALS AT LOCATIONS OF BASE REMOVAL WILL BE PAID AS "REMOVE TRAFFIC SIGNALS, CTH PD & COMMERCE PARK DRIVE".

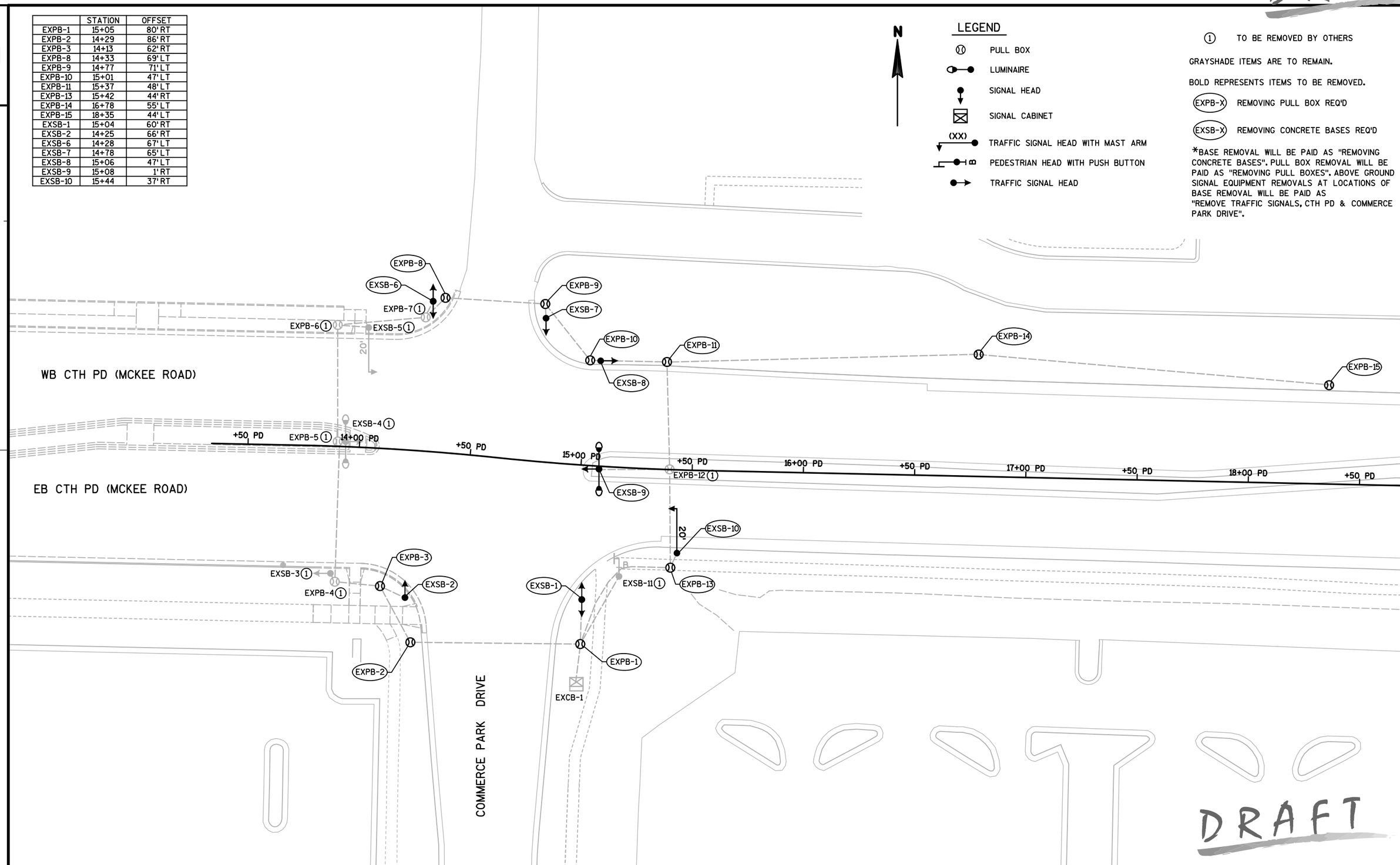

DRAFT

PROJECT NO:5849-02-02	HWY:CTH PD	COUNTY:DANE	CONSTRUCTION DETAILS - BASE & PULL BOX REMOVAL	SHEET 29	E

DRAFT

	STATION	OFFSET
EXPB-1	27+38	1' RT
EXPB-2	27+38	48' RT
EXPB-3	25+62	48' RT
EXPB-4	25+84	10' LT
EXPB-5	26+26	94' LT
EXSB-2	27+32	1' RT
EXSB-3	27+34	39' RT
EXSB-4	27+32	50' RT
EXSB-5	26+38	39' RT
EXSB-6	25+88	39' RT
EXSB-7	25+89	9' LT
EXSB-8	25+89	53' LT

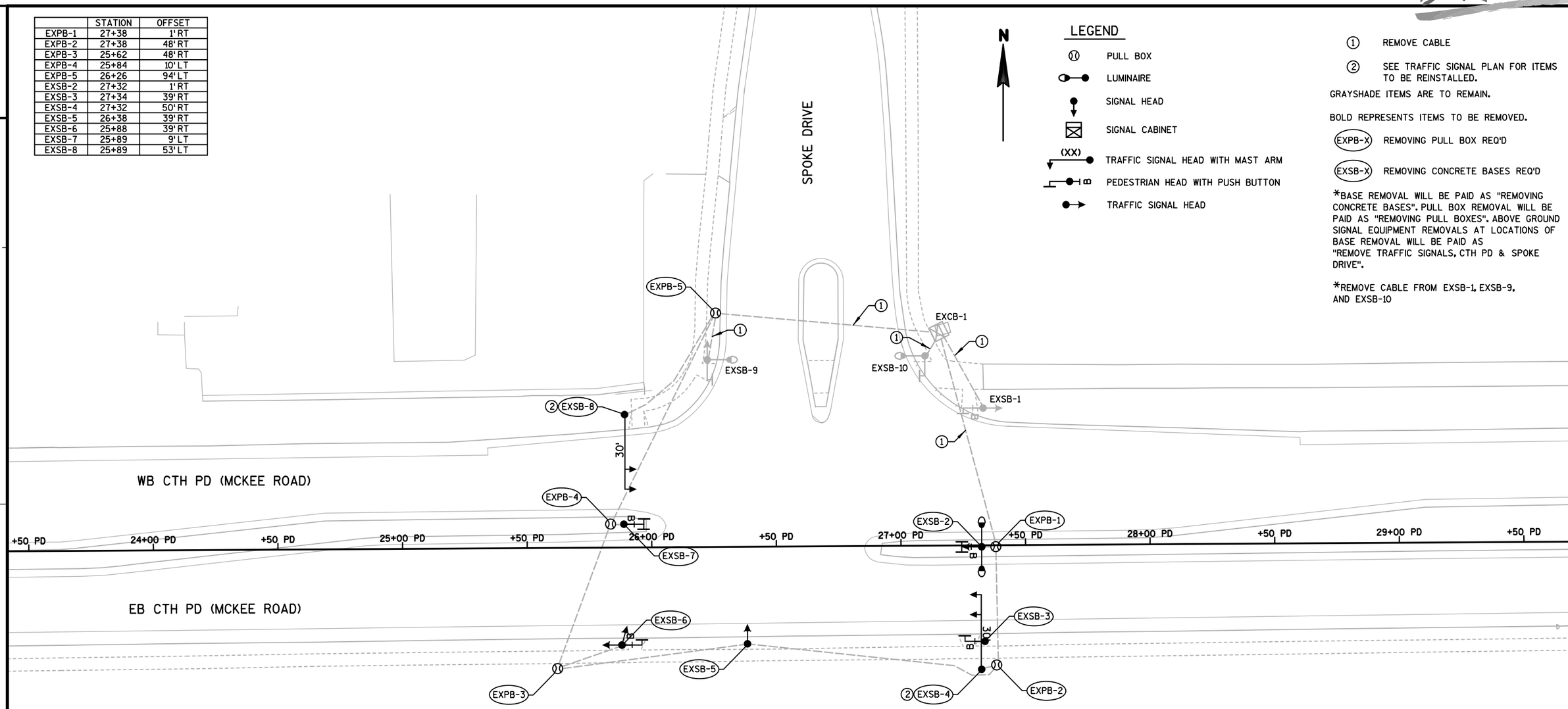

LEGEND

- PULL BOX
- LUMINAIRE
- SIGNAL HEAD
- SIGNAL CABINET
- (XX) TRAFFIC SIGNAL HEAD WITH MAST ARM
- PEDESTRIAN HEAD WITH PUSH BUTTON
- TRAFFIC SIGNAL HEAD

(1) REMOVE CABLE

(2) SEE TRAFFIC SIGNAL PLAN FOR ITEMS TO BE REINSTALLED.

GRAYSHADE ITEMS ARE TO REMAIN.

BOLD REPRESENTS ITEMS TO BE REMOVED.

(EXPB-X) REMOVING PULL BOX REQ'D

(EXSB-X) REMOVING CONCRETE BASES REQ'D

*BASE REMOVAL WILL BE PAID AS "REMOVING CONCRETE BASES". PULL BOX REMOVAL WILL BE PAID AS "REMOVING PULL BOXES". ABOVE GROUND SIGNAL EQUIPMENT REMOVALS AT LOCATIONS OF BASE REMOVAL WILL BE PAID AS "REMOVE TRAFFIC SIGNALS, CTH PD & SPOKE DRIVE".

*REMOVE CABLE FROM EXSB-1, EXSB-9, AND EXSB-10

DRAFT

PROJECT NO:5849-02-02	HWY:CTH PD	COUNTY:DANE	CONSTRUCTION DETAILS - BASE & PULL BOX REMOVAL	SHEET 30	E

DRAFT

	STATION	OFFSET
EXSB-1	31+06	36' RT
EXSB-2	31+15	3' LT
EXSB-3	30+89	2' LT
EXSB-4	31+05	11' LT
EXSB-5	30+79	10' LT
EXSB-6	30+88	49' LT

N

LEGEND

- PULL BOX
- LUMINAIRE
- SIGNAL HEAD
- SIGNAL CABINET
- (XX) TRAFFIC SIGNAL HEAD WITH MAST ARM
- B PEDESTRIAN HEAD WITH PUSH BUTTON
- TRAFFIC SIGNAL HEAD

GRAYSHADE ITEMS ARE TO REMAIN.

BOLD REPRESENTS ITEMS TO BE REMOVED.

(EXSB-X) REMOVING CONCRETE BASES REQ'D

*BASE REMOVAL WILL BE PAID AS "REMOVING CONCRETE BASES". ABOVE GROUND SIGNAL EQUIPMENT REMOVALS AT LOCATIONS OF BASE REMOVAL WILL BE PAID AS "REMOVE CITY-OWNED RRRB EQUIPMENT".

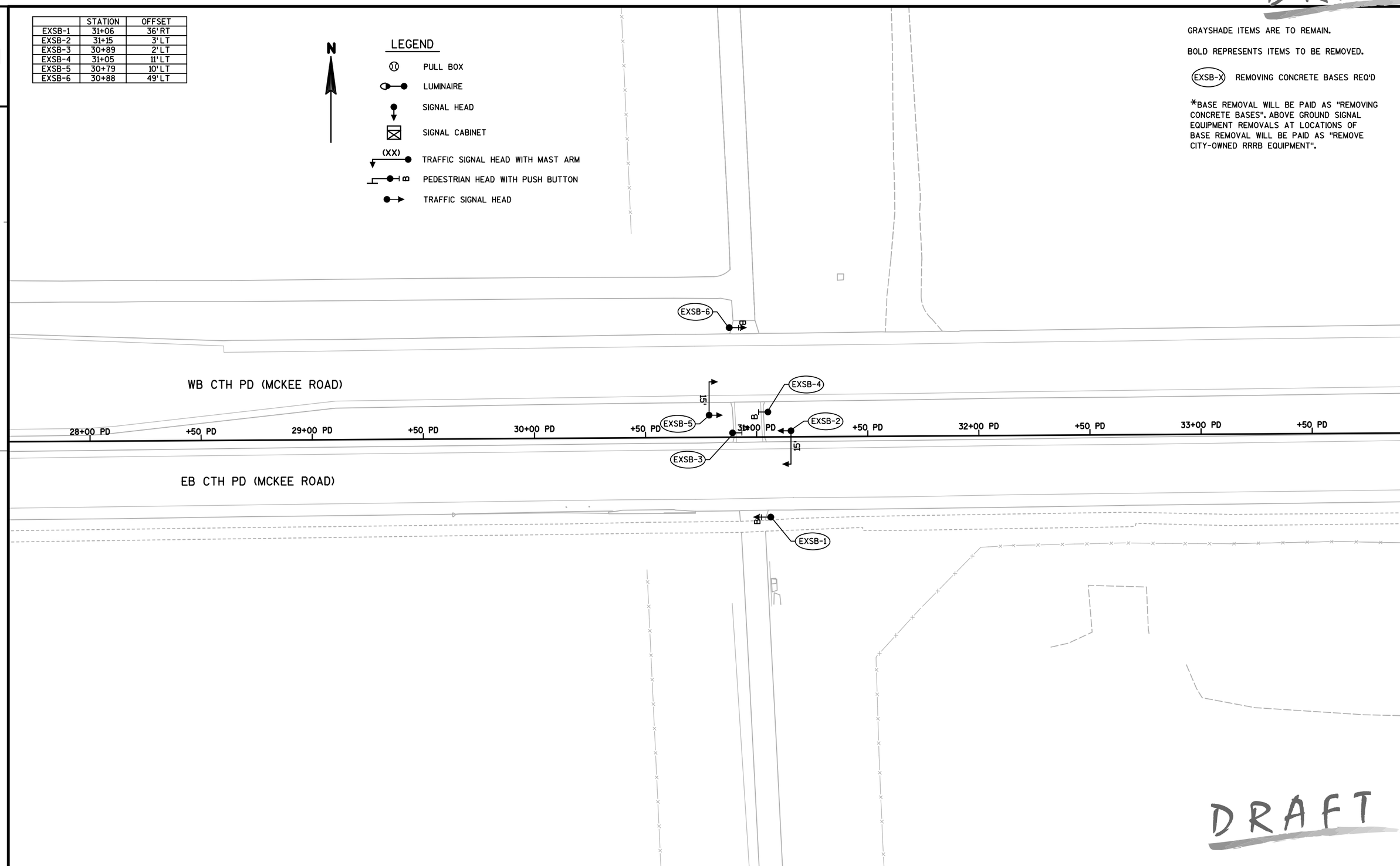

DRAFT

PROJECT NO:5849-02-02	HWY:CTH PD	COUNTY:DANE	CONSTRUCTION DETAILS - BASE & PULL BOX REMOVAL	SHEET 31	E

DRAFT

	STATION	OFFSET
EXPB-1	46+01	78' RT
EXPB-2	46+05	9' RT
EXPB-3	45+69	9' RT
EXPB-4	46+33	36' LT
EXPB-5	46+49	53' LT
EXPB-6	46+49	82' LT
EXPB-7	47+32	56' LT
EXPB-8	47+53	40' LT
EXPB-9	47+49	16' RT
EXPB-10	47+81	16' RT
EXPB-11	47+58	54' RT
EXPB-12	46+91	93' RT
EXPB-13	46+80	143' RT
EXPB-14	46+13	93' RT
EXPB-15	43+44	67' RT
EXPB-16	49+46	32' LT
EXSB-1	45+95	73' RT
EXSB-2	46+11	8' RT
EXSB-3	46+26	34' LT
EXSB-4	46+45	52' LT
EXSB-5	47+26	64' LT
EXSB-6	47+48	43' LT
EXSB-7	47+43	16' RT
EXSB-8	47+38	58' RT
EXSB-9	46+93	88' RT
EXSB-10	46+09	88' RT

LEGEND

- PULL BOX
- LUMINAIRE
- SIGNAL HEAD
- SIGNAL CABINET
- (XX) TRAFFIC SIGNAL HEAD WITH MAST ARM
- B PEDESTRIAN HEAD WITH PUSH BUTTON
- TRAFFIC SIGNAL HEAD

(1) REMOVE CABLE

(2) SEE TRAFFIC SIGNAL PLAN FOR ITEMS TO BE REINSTALLED.

GRAYSHADE ITEMS ARE TO REMAIN.

BOLD REPRESENTS ITEMS TO BE REMOVED.

(EXPB-X) REMOVING PULL BOX REQ'D

(EXSB-X) REMOVING CONCRETE BASES REQ'D

*BASE REMOVAL WILL BE PAID AS "REMOVING CONCRETE BASES". PULL BOX REMOVAL WILL BE PAID AS "REMOVING PULL BOXES". ABOVE GROUND SIGNAL EQUIPMENT REMOVALS AT LOCATIONS OF BASE REMOVAL WILL BE PAID AS "REMOVE TRAFFIC SIGNALS, CTH PD & SEMINOLE HIGHWAY".

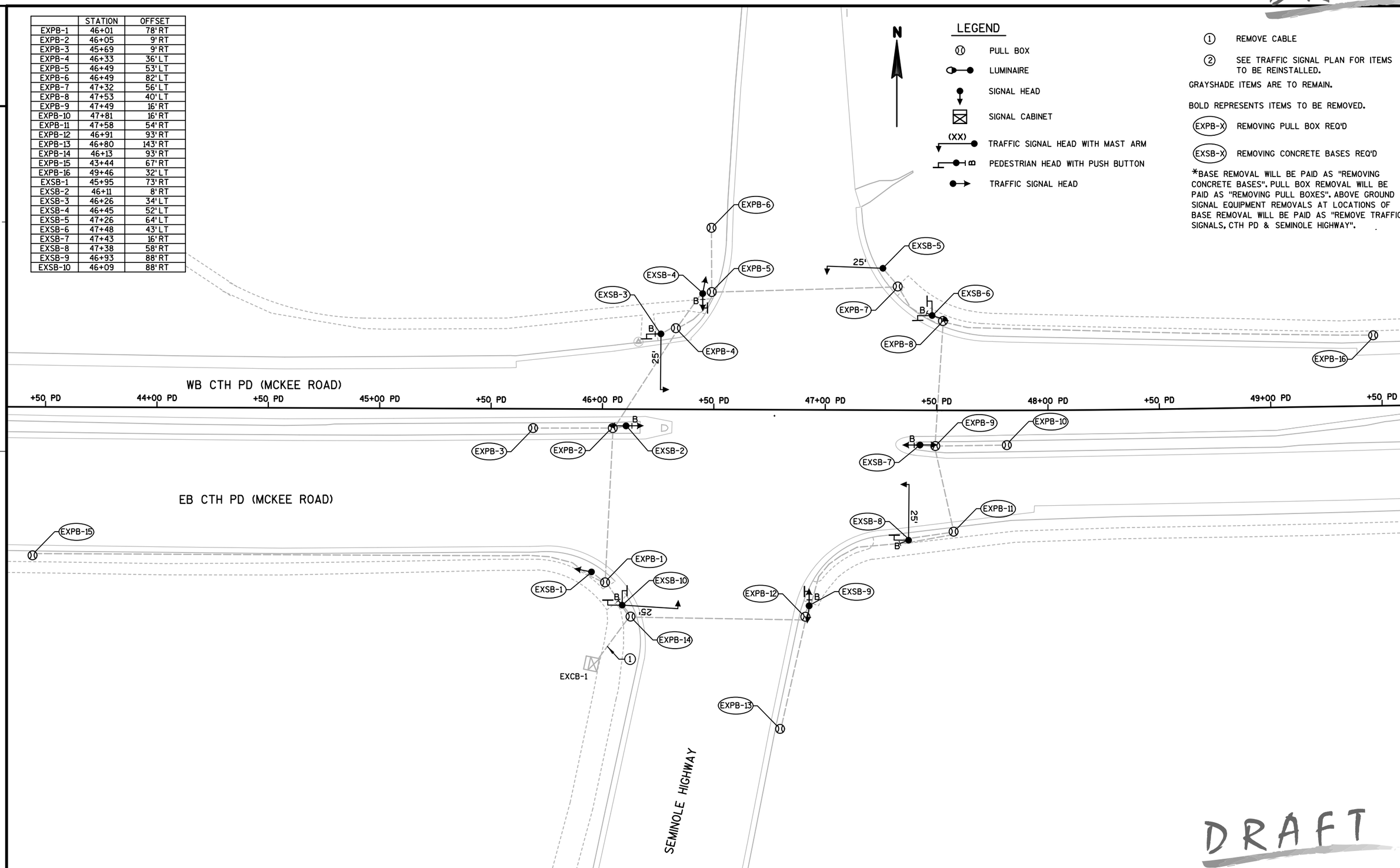

DRAFT

PROJECT NO:5849-02-02	HWY:CTH PD	COUNTY:DANE	CONSTRUCTION DETAILS - BASE & PULL BOX REMOVAL	SHEET 32	E

DRAFT

2

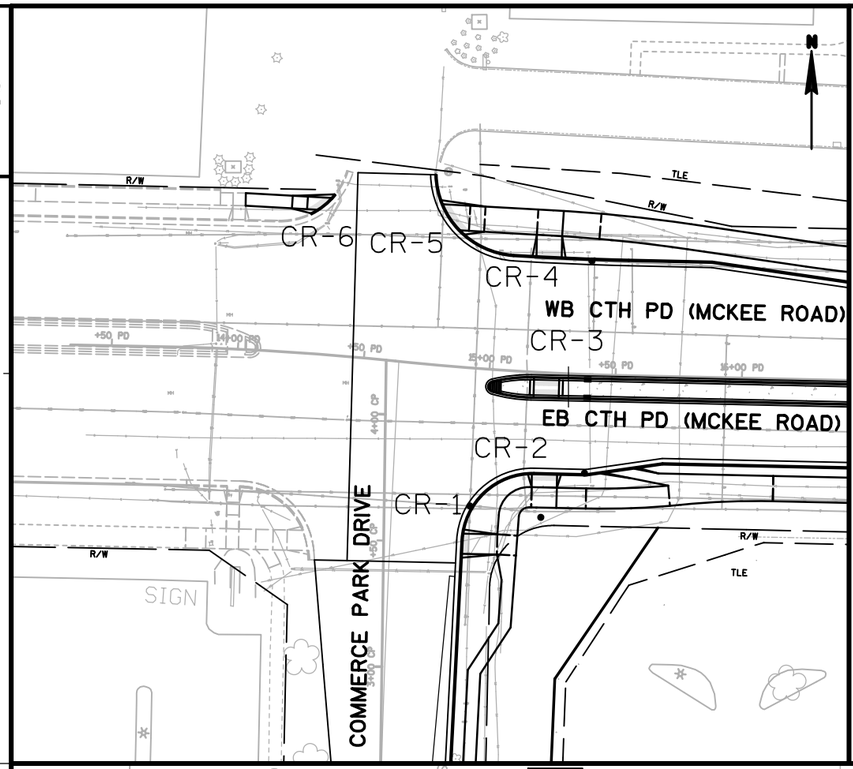

CR-1 POINTS COMMERCE PARK DRIVE				
POINT NO.	STATION	OFFSET		ELEV.
CR100	3+45.20 CP	30.73	'RT	1004.13
CR101	3+45.18 CP	31.23	'RT	1004.14
CR102	3+53.25 CP	31.16	'RT	1004.20
CR103	3+53.18 CP	31.65	'RT	1004.21
CR104	3+45.09 CP	44.91	'RT	1004.37
CR105	3+53.09 CP	44.96	'RT	1004.48
CR107	3+44.78 CP	52.48	'RT	1004.48
CR108	3+52.61 CP	52.94	'RT	1004.60
CR109	3+35.08 CP	46.89	'RT	1004.49
CR110	3+35.04 CP	51.90	'RT	1004.59

CR-2 POINTS EB CTH PD (MCKEE ROAD)				
POINT NO.	STATION	OFFSET		ELEV.
CR200	115+27.65 EB	29.00	'RT	1005.26
CR201	115+27.65 EB	29.50	'RT	1005.29
CR202	115+17.63 EB	29.01	'RT	1005.18
CR203	115+17.65 EB	29.51	'RT	1005.21
CR204	115+17.65 EB	34.50	'RT	1005.28
CR205	115+27.65 EB	34.50	'RT	1005.35
CR206	115+27.65 EB	42.50	'RT	1005.47
CR207	115+17.65 EB	42.50	'RT	1005.32
CR208	115+39.31 EB	34.50	'RT	1005.87
CR209	115+39.31 EB	42.50	'RT	1005.99
CR210	115+71.76 EB	32.75	'RT	1006.08
CR211	115+72.62 EB	40.71	'RT	1006.20
CR212	115+67.85 EB	28.00	'RT	1005.95
CR213	116+13.27 EB	28.00	'RT	1006.18
CR214	116+13.27 EB	38.00	'RT	1006.03

CR-3 POINTS EB CTH PD (MCKEE ROAD)				
POINT NO.	STATION	OFFSET		ELEV.
CR300	115+17.65 EB	9.00	'LT	1004.98
CR301	115+27.65 EB	9.00	'LT	1005.08
CR302	115+17.65 EB	1.00	'LT	1005.33
CR303	115+27.65 EB	1.00	'LT	1005.40
CR304	115+17.65 EB	2.00	'LT	1005.34
CR305	115+27.65 EB	2.00	'LT	1005.41

CR-4 POINTS WB CTH PD (MCKEE ROAD)				
POINT NO.	STATION	OFFSET		ELEV.
CR400	215+16.43 WB	35.00	'LT	1004.90
CR401	215+16.43 WB	35.50	'LT	1004.91
CR402	215+26.77 WB	35.00	'LT	1004.99
CR403	215+26.77 WB	35.50	'LT	1005.01
CR404	215+16.13 WB	43.88	'LT	1005.15
CR405	215+26.55 WB	43.83	'LT	1005.30
CR406	215+16.13 WB	53.88	'LT	1005.30
CR407	215+26.72 WB	53.83	'LT	1005.45
CR408	215+41.91 WB	43.31	'LT	1005.87
CR409	215+42.48 WB	53.29	'LT	1006.02

CR-5 POINTS WB CTH PD (MCKEE ROAD)				
POINT NO.	STATION	OFFSET		ELEV.
CR500	214+75.96 WB	52.95	'LT	1003.77
CR501	214+76.42 WB	53.19	'LT	1003.78
CR502	214+84.28 WB	43.06	'LT	1003.97
CR503	214+84.62 WB	43.44	'LT	1003.98
CR504	214+87.74 WB	53.52	'LT	1003.93
CR505	214+88.01 WB	43.53	'LT	1004.02
CR506	214+94.04 WB	53.66	'LT	1004.35
CR507	214+94.26 WB	43.67	'LT	1004.20

CR-6 POINTS WB CTH PD (MCKEE ROAD)				
POINT NO.	STATION	OFFSET		ELEV.
CR600	214+27.87 WB	46.46	'LT	1003.98
CR601	214+32.93 WB	51.56	'LT	1003.87
CR602	214+24.07 WB	46.40	'LT	1004.04
CR603	214+24.01 WB	51.40	'LT	1004.01
CR604	214+18.31 WB	46.34	'LT	1004.11
CR605	214+18.28 WB	51.34	'LT	1004.19
CR606	214+00.62 WB	46.36	'LT	*
CR607	214+00.49 WB	51.36	'LT	*
CR608	214+33.30 WB	51.25	'LT	1003.86
CR609	214+28.16 WB	46.06	'LT	1003.97

* MATCH EXISTING

DRAFT

2

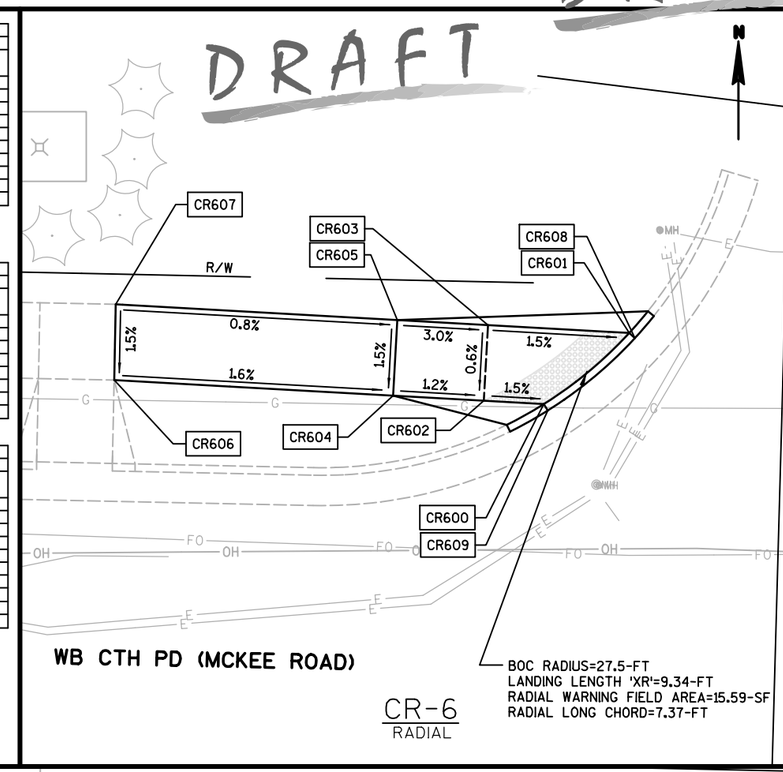

BOC RADIUS=27.5-FT
LANDING LENGTH 'XR'=9.34-FT
RADIAL WARNING FIELD AREA=15.59-SF
RADIAL LONG CHORD=7.37-FT

CR-6
RADIAL

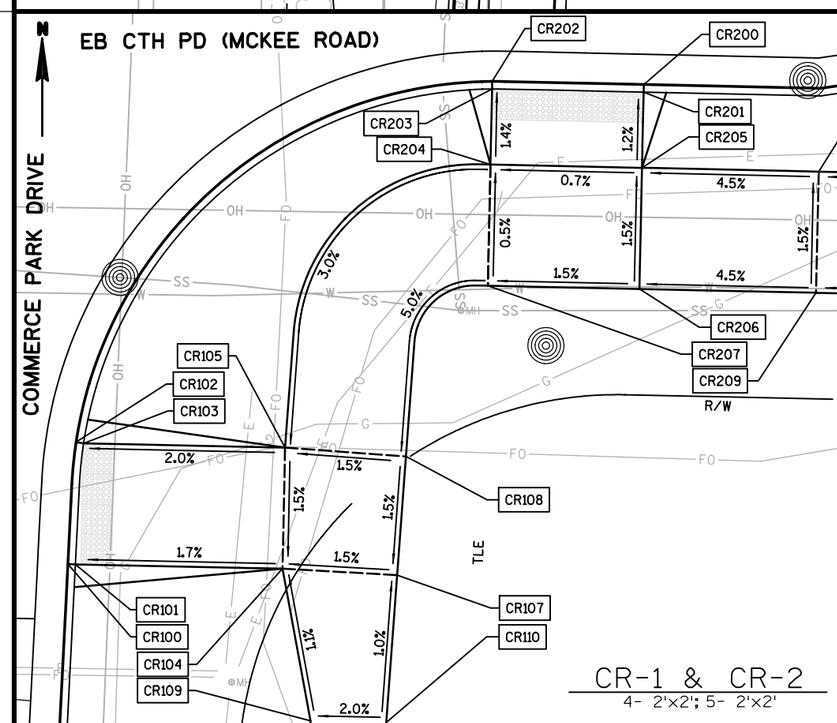

CR-1 & CR-2
4- 2'x2'; 5- 2'x2'

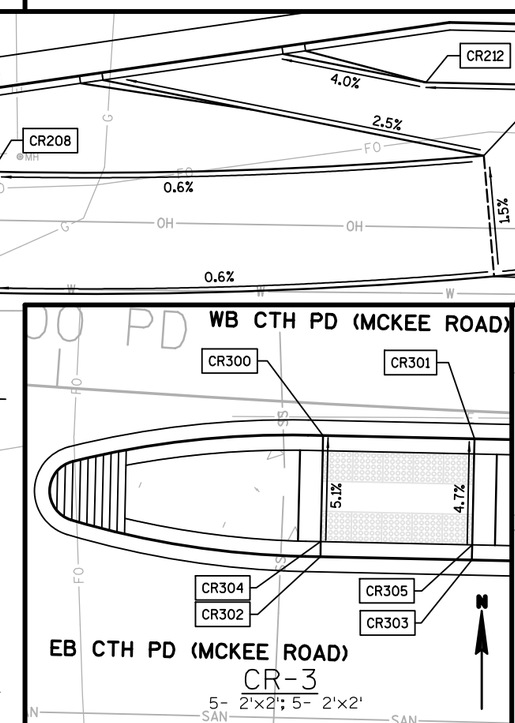

CR-3
5- 2'x2'; 5- 2'x2'

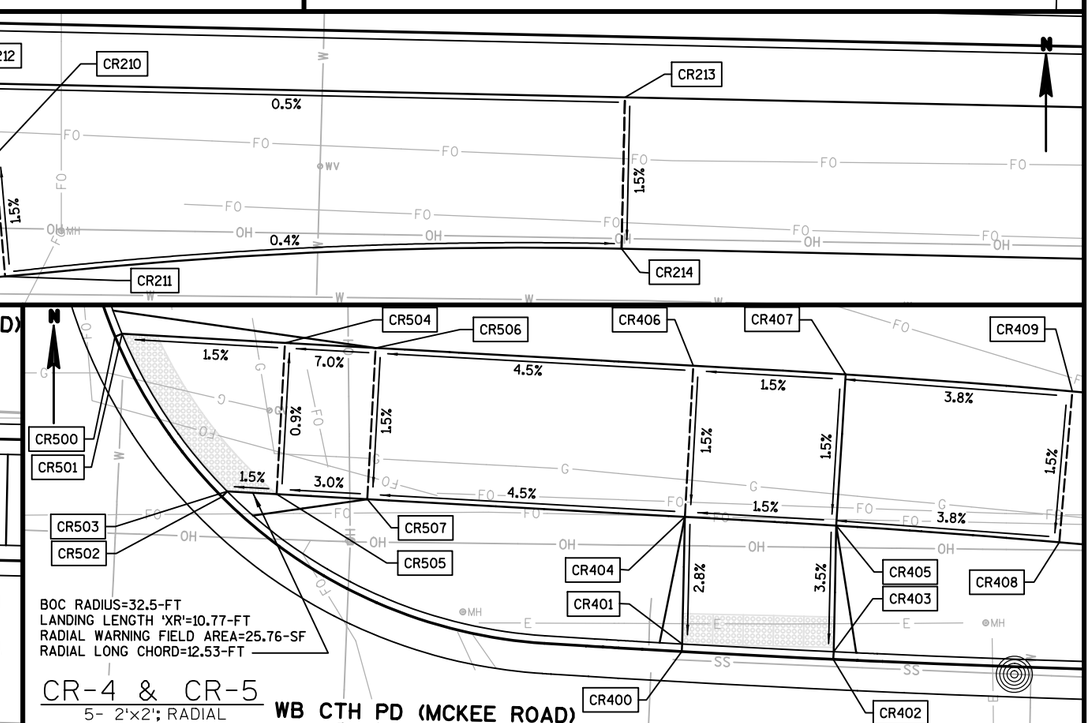

BOC RADIUS=32.5-FT
LANDING LENGTH 'XR'=10.77-FT
RADIAL WARNING FIELD AREA=25.76-SF
RADIAL LONG CHORD=12.53-FT

CR-4 & CR-5
5- 2'x2'; RADIAL

PROJECT NO: 5849-02-02	HWY: CTH PD	COUNTY: DANE	CONSTRUCTION DETAILS - CURB RAMPS	SHEET 33	E

DRAFT

2

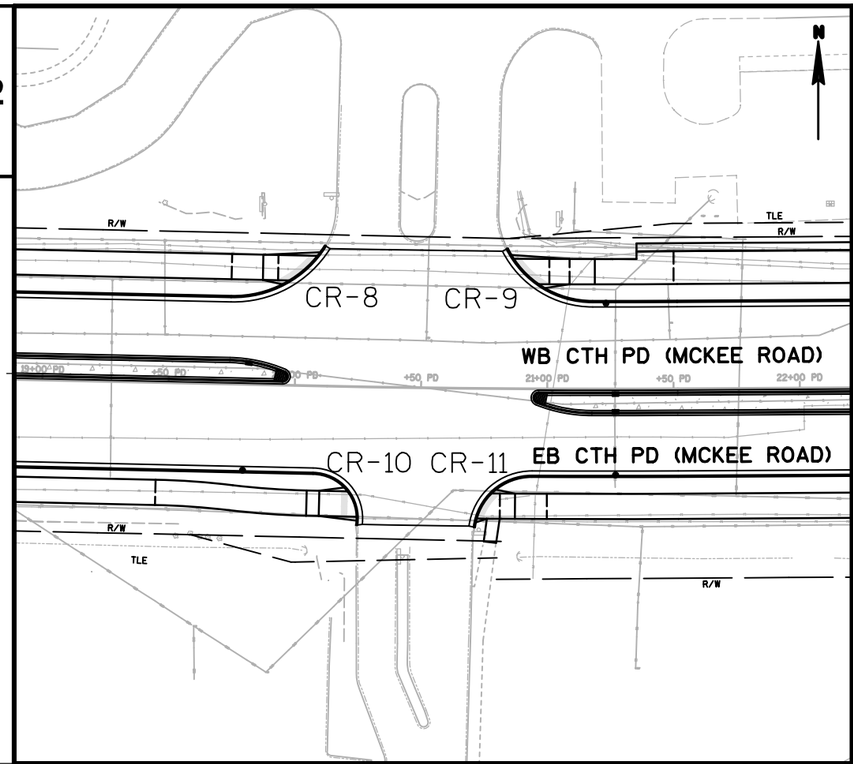

CR-8 POINTS WB CTH PD (MCKEE ROAD)				
POINT NO.	STATION	OFFSET		ELEV.
CR800	220+08.08 WB	40.69	'LT	1021.27
CR801	220+07.69 WB	41.00	'LT	1012.28
CR802	219+96.92 WB	30.58	'LT	1012.05
CR803	219+96.66 WB	31.00	'LT	1012.06
CR804	219+92.44 WB	31.00	'LT	1012.12
CR805	219+92.44 WB	41.00	'LT	1012.27
CR806	219+86.44 WB	31.00	'LT	1012.26
CR807	219+86.44 WB	41.00	'LT	1012.41
CR808	219+74.07 WB	31.00	'LT	1012.54
CR809	219+74.07 WB	41.00	'LT	1012.69

CR-9 POINTS WB CTH PD (MCKEE ROAD)				
POINT NO.	STATION	OFFSET		ELEV.
CR900	220+96.17 WB	30.59	'LT	1015.22
CR901	220+96.46 WB	31.00	'LT	1015.23
CR902	220+85.95 WB	40.72	'LT	1015.00
CR903	220+86.36 WB	41.00	'LT	1015.01
CR904	221+00.47 WB	31.00	'LT	1015.29
CR905	221+00.47 WB	41.00	'LT	1015.22
CR906	221+08.53 WB	31.00	'LT	1015.71
CR907	221+08.53 WB	41.00	'LT	1015.86
CR908	221+18.62 WB	31.00	'LT	1015.86
CR909	221+18.62 WB	41.00	'LT	1016.01
CR910	221+49.97 WB	31.00	'LT	1018.23
CR911	221+49.97 WB	41.00	'LT	1018.38

CR-10 POINTS EB CTH PD (MCKEE ROAD)				
POINT NO.	STATION	OFFSET		ELEV.
CR1000	120+25.85 EB	40.97	'RT	1014.05
CR1001	120+25.35 EB	41.00	'RT	1014.06
CR1002	120+21.92 EB	30.69	'RT	1013.87
CR1003	120+21.53 EB	31.00	'RT	1013.88
CR1004	120+10.59 EB	41.00	'RT	1013.53
CR1005	120+10.59 EB	31.00	'RT	1013.68
CR1006	120+05.59 EB	40.99	'RT	1013.45
CR1007	120+05.59 EB	30.99	'RT	1013.60
CR1008	119+45.64 EB	28.00	'RT	1011.43
CR1009	119+45.64 EB	38.00	'RT	1011.28
CR1010	120+19.55 EB	31.00	'RT	1013.91
CR1011	120+19.54 EB	41.00	'RT	1014.15

CR-11 POINTS EB CTH PD (MCKEE ROAD)				
POINT NO.	STATION	OFFSET		ELEV.
CR1100	120+72.31 EB	40.87	'RT	1015.32
CR1101	120+72.79 EB	41.00	'RT	1015.33
CR1102	120+78.24 EB	30.65	'RT	1015.52
CR1103	120+78.59 EB	31.00	'RT	1015.53
CR1104	120+76.69 EB	41.00	'RT	1015.38
CR1105	120+81.70 EB	41.00	'RT	1015.46
CR1106	120+75.46 EB	50.01	'RT	*
CR1107	120+80.38 EB	50.60	'RT	*
CR1108	120+81.70 EB	31.00	'RT	1015.57
CR1109	120+87.67 EB	41.00	'RT	1015.72
CR1110	120+87.67 EB	31.00	'RT	1015.87
CR1111	121+00.18 EB	41.00	'RT	1016.49
CR1112	121+00.18 EB	31.00	'RT	1016.64

* MATCH EXISTING

2

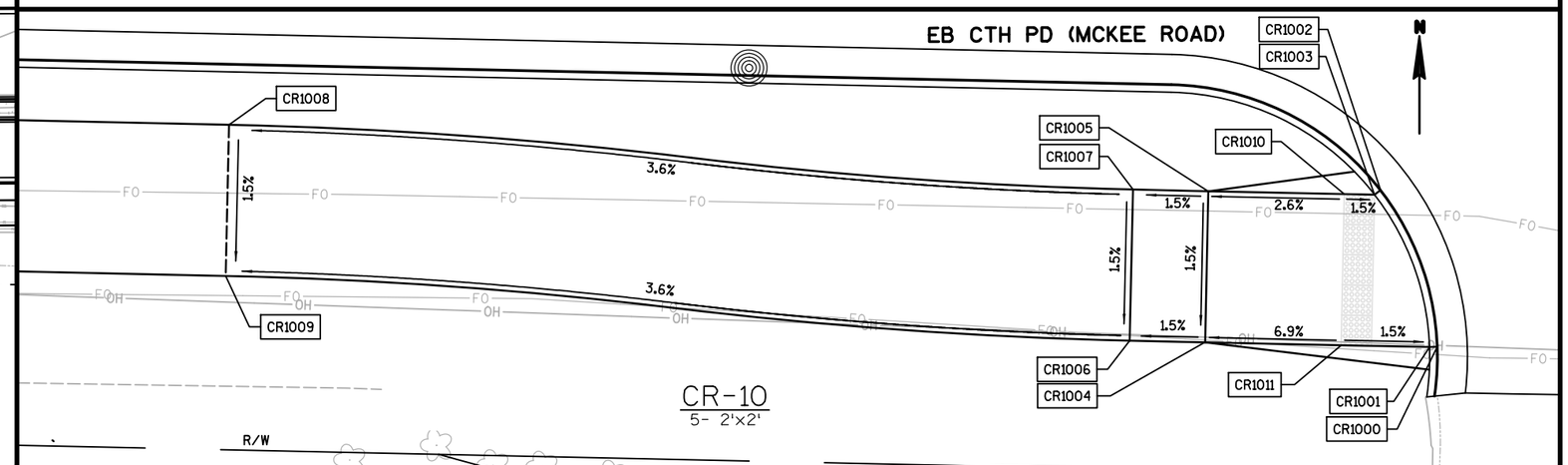

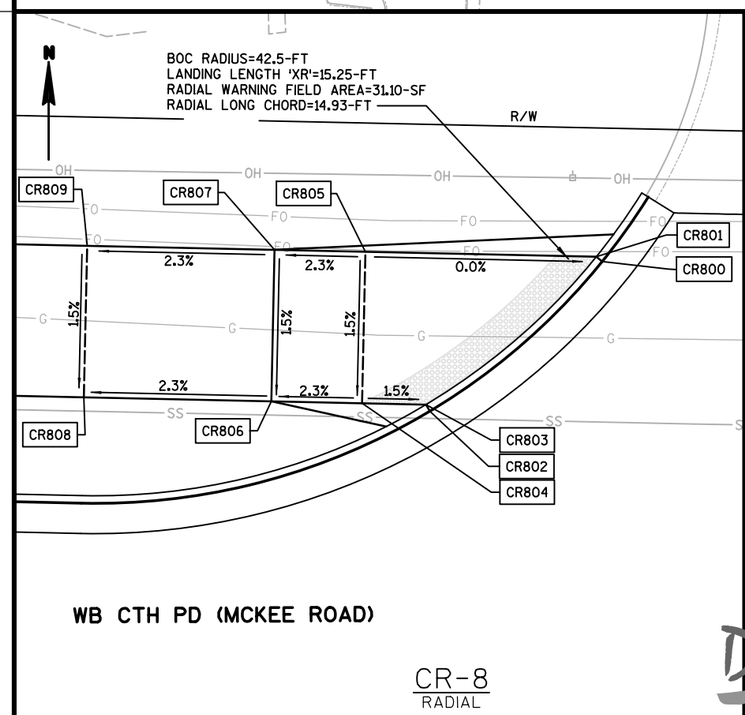

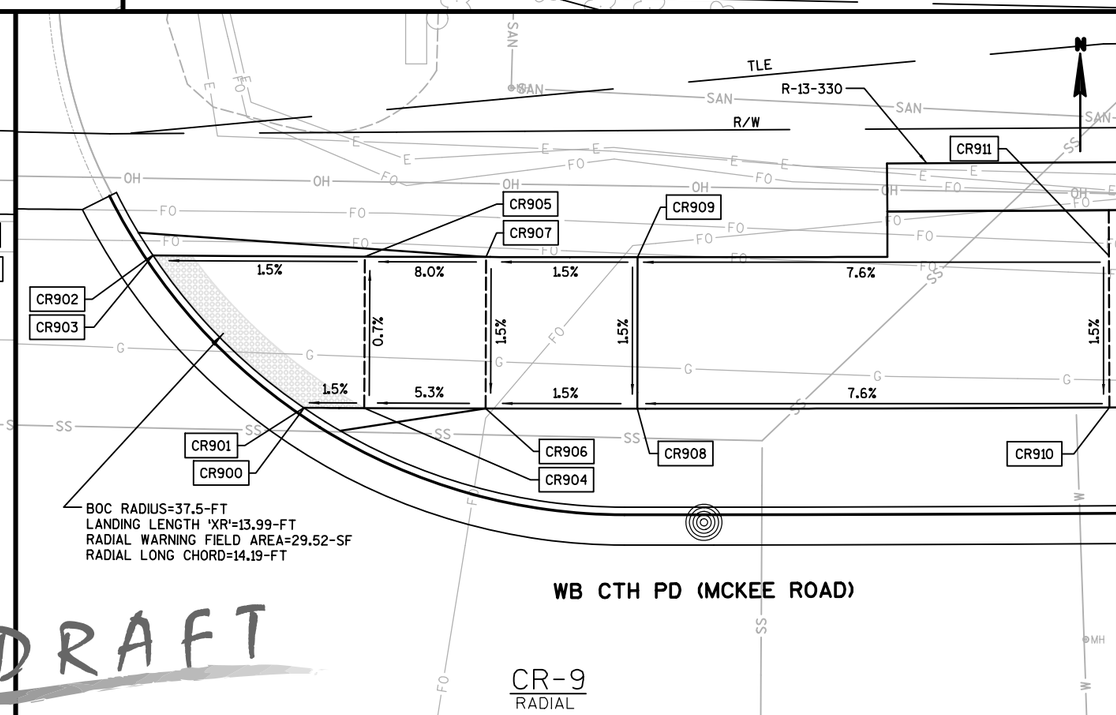

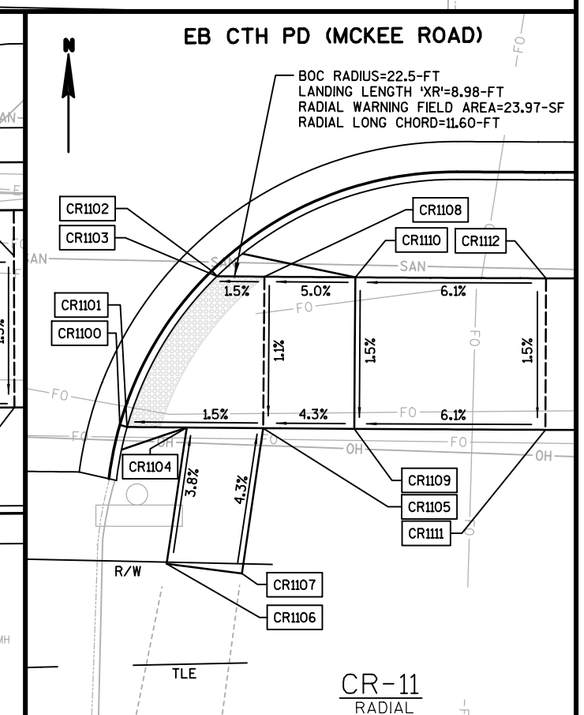

DRAFT

PROJECT NO: 5849-02-02	HWY: CTH PD	COUNTY: DANE	CONSTRUCTION DETAILS - CURB RAMPS	SHEET 34	E

DRAFT

2

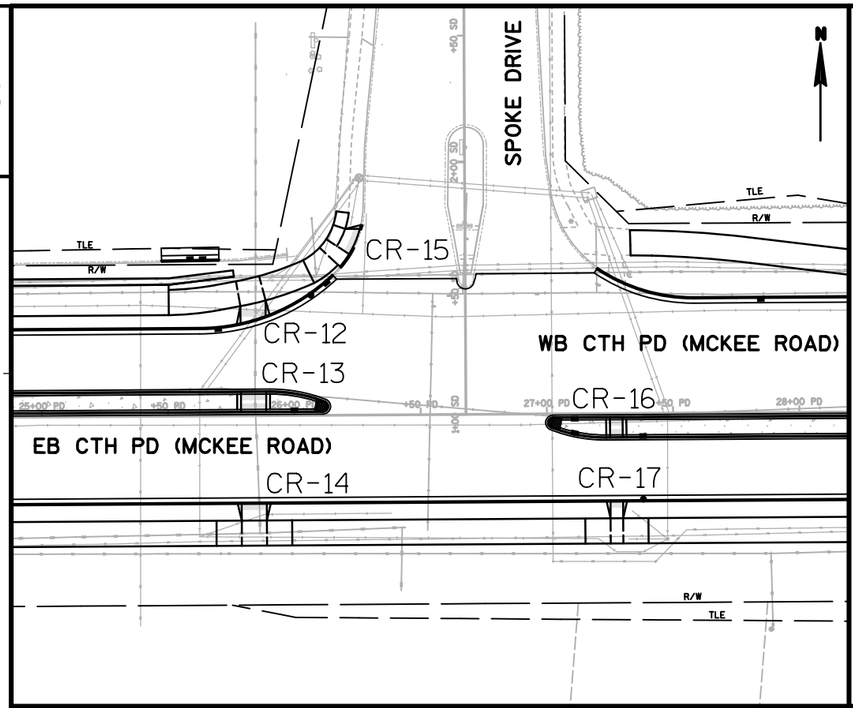

CR-12 POINTS WB CTH PD (MCKEE ROAD)				
POINT NO.	STATION	OFFSET		ELEV.
CR1200	225+78.68 WB	25.74	'LT	1025.10
CR1201	225+78.57 WB	26.23	'LT	1025.11
CR1202	225+88.74 WB	28.62	'LT	1014.96
CR1203	225+88.57 WB	29.09	'LT	1024.97
CR1204	225+78.57 WB	29.09	'LT	1025.15
CR1205	225+78.57 WB	32.93	'LT	1025.24
CR1206	225+88.57 WB	35.13	'LT	1025.10
CR1207	225+86.03 WB	44.80	'LT	1025.25
CR1208	225+76.83 WB	42.77	'LT	1025.39
CR1209	225+50.21 WB	29.52	'LT	1026.01
CR1210	225+50.21 WB	39.52	'LT	1026.16

CR-13 POINTS WB CTH PD (MCKEE ROAD)				
POINT NO.	STATION	OFFSET		ELEV.
CR1300	225+78.57 WB	9.00	'RT	1025.05
CR1301	225+88.57 WB	9.00	'RT	1025.00
CR1302	225+88.57 WB	1.00	'RT	1025.24
CR1303	225+78.57 WB	1.00	'RT	1025.28
CR1304	225+78.57 WB	2.00	'RT	1025.30
CR1305	225+88.57 WB	2.00	'RT	1025.27

CR-14 POINTS EB CTH PD (MCKEE ROAD)				
POINT NO.	STATION	OFFSET		ELEV.
CR1400	125+79.15 EB	24.00	'RT	1025.12
CR1401	125+79.15 EB	24.50	'RT	1025.14
CR1402	125+89.15 EB	24.00	'RT	1025.07
CR1403	125+89.15 EB	24.50	'RT	1025.09
CR1404	125+79.15 EB	31.00	'RT	1025.47
CR1405	125+89.15 EB	31.00	'RT	1025.42
CR1406	125+79.15 EB	41.00	'RT	1025.62
CR1407	125+89.15 EB	41.00	'RT	1025.57
CR1408	125+69.15 EB	31.00	'RT	1025.86
CR1409	125+69.15 EB	41.00	'RT	1026.01
CR1410	125+99.15 EB	31.00	'RT	1025.72
CR1411	125+99.15 EB	41.00	'RT	1025.87

CR-15 POINTS SPOKE DRIVE				
POINT NO.	STATION	OFFSET		ELEV.
CR1500	1+73.53 SD	41.15	'LT	*
CR1501	1+73.66 SD	41.63	'LT	1024.85
CR1502	1+63.43 SD	45.52	'LT	*
CR1503	1+63.70 SD	45.95	'LT	1024.90
CR1504	1+73.71 SD	47.00	'LT	1025.24
CR1505	1+66.92 SD	50.79	'LT	1025.24
CR1506	1+69.69 SD	54.95	'LT	1025.32
CR1507	1+75.35 SD	52.15	'LT	1025.32
CR1508	1+66.34 SD	57.61	'LT	1025.32
CR1509	1+58.77 SD	49.58	'LT	*
CR1510	1+52.37 SD	59.84	'LT	1025.18
CR1511	1+61.38 SD	64.18	'LT	1025.31
CR1512	1+80.04 SD	45.98	'LT	*
CR1513	1+80.62 SD	50.94	'LT	*

* MATCH EXISTING

CR-16 POINTS EB CTH PD (MCKEE ROAD)				
POINT NO.	STATION	OFFSET		ELEV.
CR1600	127+25.26 EB	9.00	'LT	1023.57
CR1601	127+30.26 EB	9.00	'LT	1023.48
CR1602	127+25.26 EB	1.00	'LT	1024.13
CR1603	127+30.26 EB	1.00	'LT	1024.07
CR1604	127+25.26 EB	2.00	'LT	1024.11
CR1605	127+30.26 EB	2.00	'LT	1024.05

CR-17 POINTS EB CTH PD (MCKEE ROAD)				
POINT NO.	STATION	OFFSET		ELEV.
CR1700	127+25.26 EB	24.00	'RT	1024.09
CR1701	127+25.26 EB	24.50	'RT	1024.11
CR1702	127+30.26 EB	24.00	'RT	1024.02
CR1703	127+30.26 EB	24.50	'RT	1024.04
CR1704	127+25.26 EB	31.00	'RT	1024.44
CR1705	127+25.26 EB	41.00	'RT	1024.59
CR1706	127+15.26 EB	31.00	'RT	1024.91
CR1707	127+15.26 EB	41.00	'RT	1025.06
CR1708	127+30.26 EB	31.00	'RT	1024.37
CR1709	127+30.26 EB	41.00	'RT	1024.52
CR1710	127+40.26 EB	31.00	'RT	1024.61
CR1711	127+40.26 EB	41.00	'RT	1024.76

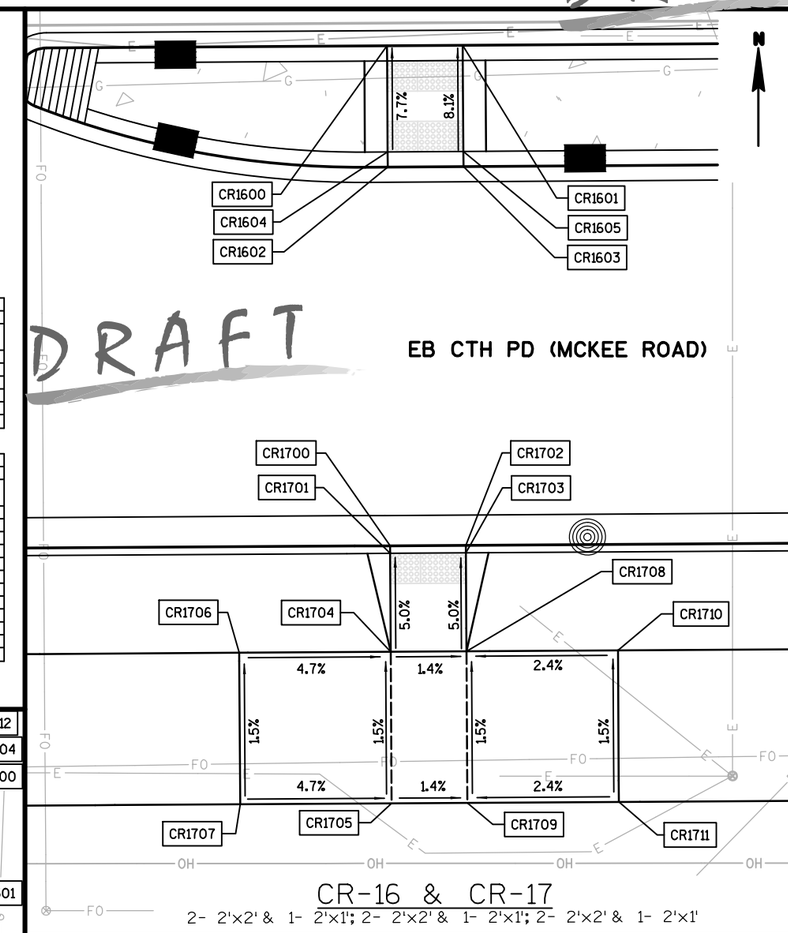

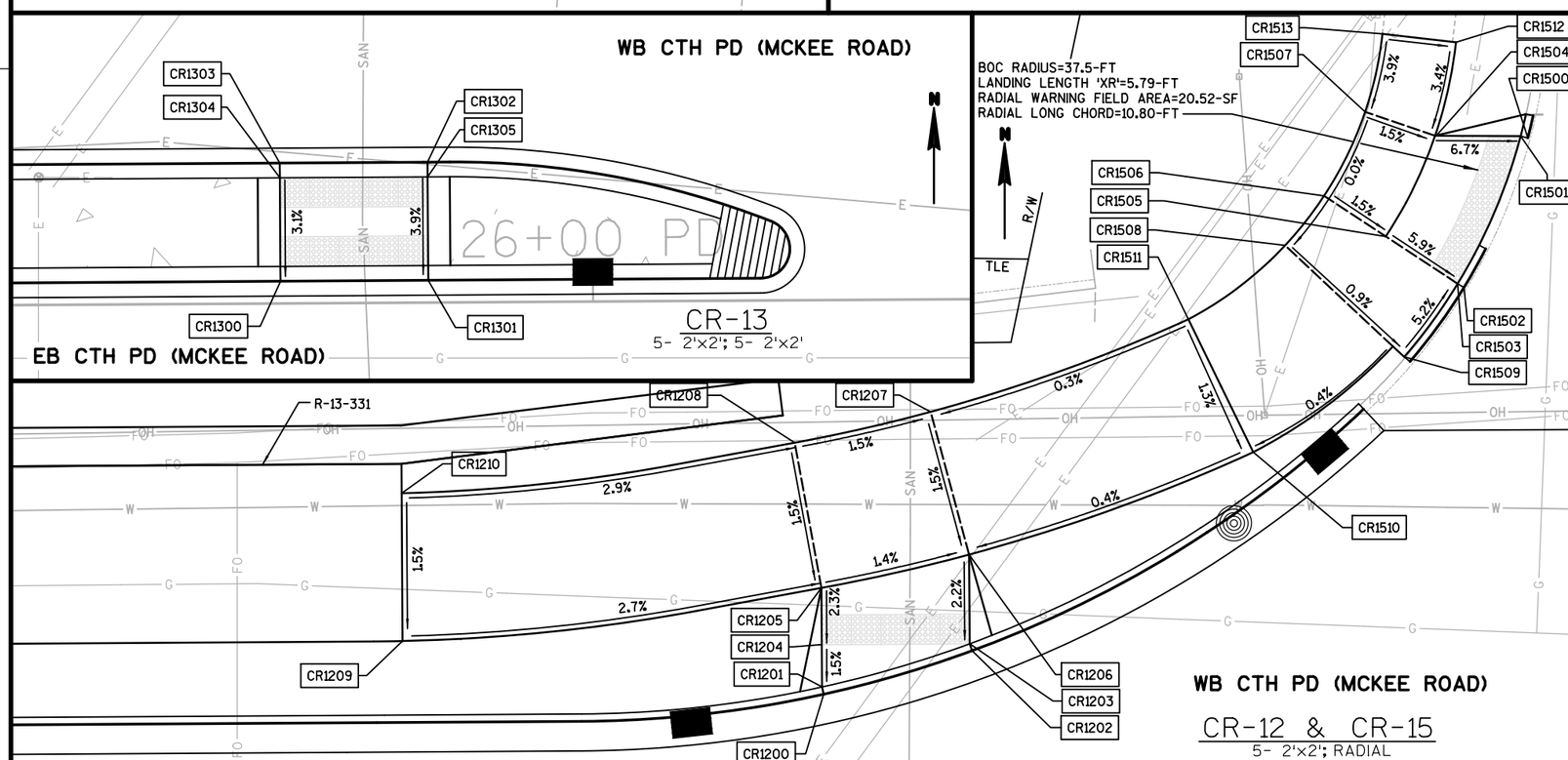

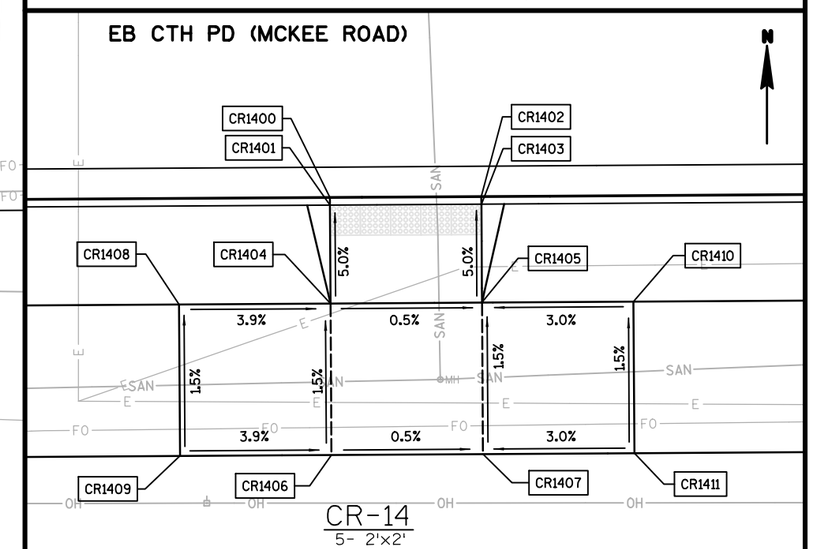

PROJECT NO: 5849-02-02	HWY: CTH PD	COUNTY: DANE	CONSTRUCTION DETAILS - CURB RAMPS	SHEET 35	E

DRAFT

2

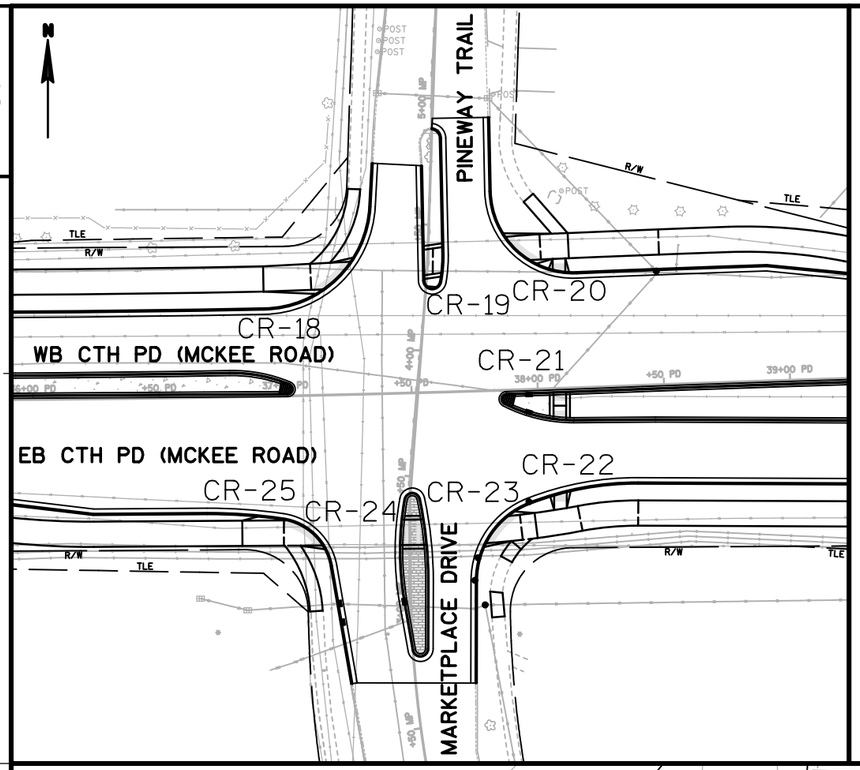

CR-18 POINTS MARKETPLACE DRIVE				
POINT NO.	STATION	OFFSET		ELEV.
CR1800	4+20.75 MP	40.64	'LT	1023.15
CR1801	4+21.14 MP	40.95	'LT	1023.16
CR1802	4+33.95 MP	30.24	'LT	1023.14
CR1803	4+34.22 MP	30.66	'LT	1023.15
CR1804	4+33.52 MP	38.73	'LT	1023.20
CR1805	4+20.68 MP	45.14	'LT	1023.20
CR1806	4+30.92 MP	46.46	'LT	1023.25
CR1807	4+18.59 MP	63.97	'LT	1023.97
CR1808	4+28.55 MP	64.92	'LT	1024.12
CR1809	4+38.54 MP	43.19	'LT	*
CR1810	4+34.73 MP	39.96	'LT	*
CR1811	4+47.25 MP	30.50	'LT	1023.35
CR1812	4+49.02 MP	35.18	'LT	1023.42

* MATCH EXISTING

CR-19 POINTS MARKETPLACE DRIVE				
POINT NO.	STATION	OFFSET		ELEV.
CR1900	4+41.25 MP	5.93	'RT	1023.51
CR1901	4+31.29 MP	6.06	'RT	1023.64
CR1902	4+29.86 MP	1.36	'LT	1023.56
CR1903	4+39.98 MP	2.01	'LT	1023.45
CR1904	4+40.61 MP	1.96	'RT	1023.57
CR1905	4+30.61 MP	2.35	'RT	1023.70

CR-20 POINTS WB CTH PD (MCKEE ROAD)				
POINT NO.	STATION	OFFSET		ELEV.
CR2000	238+06.79 WB	36.27	'LT	1023.80
CR2001	238+06.94 WB	36.75	'LT	1023.81
CR2002	238+11.87 WB	35.20	'LT	1023.90
CR2003	238+11.93 WB	35.70	'LT	1023.91
CR2004	238+12.09 WB	40.89	'LT	1023.93
CR2005	238+07.05 WB	40.85	'LT	1023.85
CR2006	238+13.5 WB	40.90	'LT	1023.95
CR2007	238+13.43 WB	50.90	'LT	1023.90
CR2008	238+02.36 WB	40.79	'LT	1023.72
CR2009	238+02.17 WB	50.79	'LT	1023.67
CR2010	237+88.30 WB	49.97	'LT	1023.41
CR2011	237+88.73 WB	50.25	'LT	1023.42
CR2012	237+98.07 WB	40.27	'LT	1023.65
CR2013	237+98.34 WB	40.69	'LT	1023.66
CR2014	238+06.96 WB	50.85	'LT	1023.80
CR2015	237+96.28 WB	63.78	'LT	*
CR2016	238+00.18 WB	66.95	'LT	*
CR2017	238+11.96 WB	36.61	'LT	1023.92
CR2018	238+49.38 WB	41.00	'LT	1024.90
CR2019	238+49.38 WB	51.00	'LT	1025.05

* MATCH EXISTING

CR-21 POINTS EB CTH PD (MCKEE ROAD)				
POINT NO.	STATION	OFFSET		ELEV.
CR2100	138+06.30 EB	1.55	'LT	1023.74
CR2101	138+11.38 EB	1.08	'LT	1023.80
CR2102	138+11.41 EB	12.16	'LT	1023.98
CR2103	138+06.41 EB	12.02	'LT	1023.94
CR2104	138+11.43 EB	2.54	'LT	1023.82
CR2105	138+11.43 EB	6.78	'LT	1024.03
CR2106	138+06.43 EB	6.78	'LT	1023.99

DRAFT

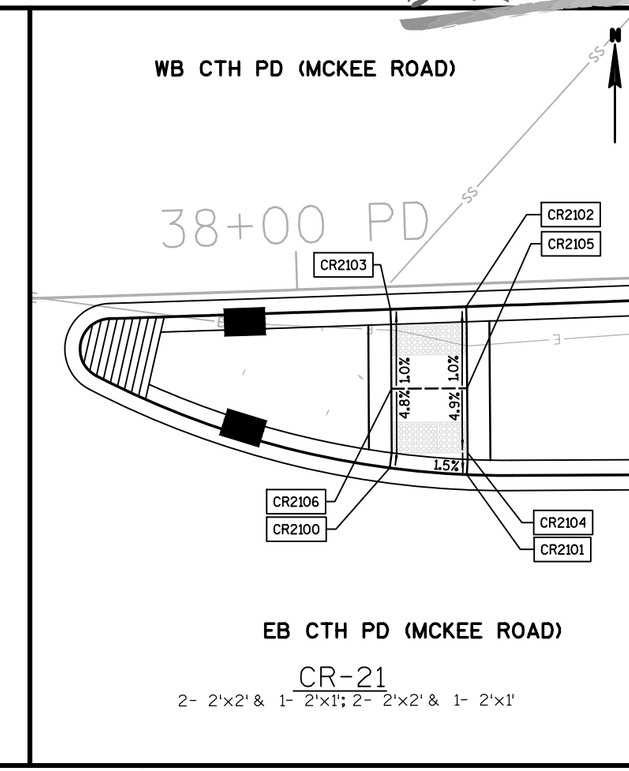

CR-21
2- 2'×2' & 1- 2'×1'; 2- 2'×2' & 1- 2'×1'

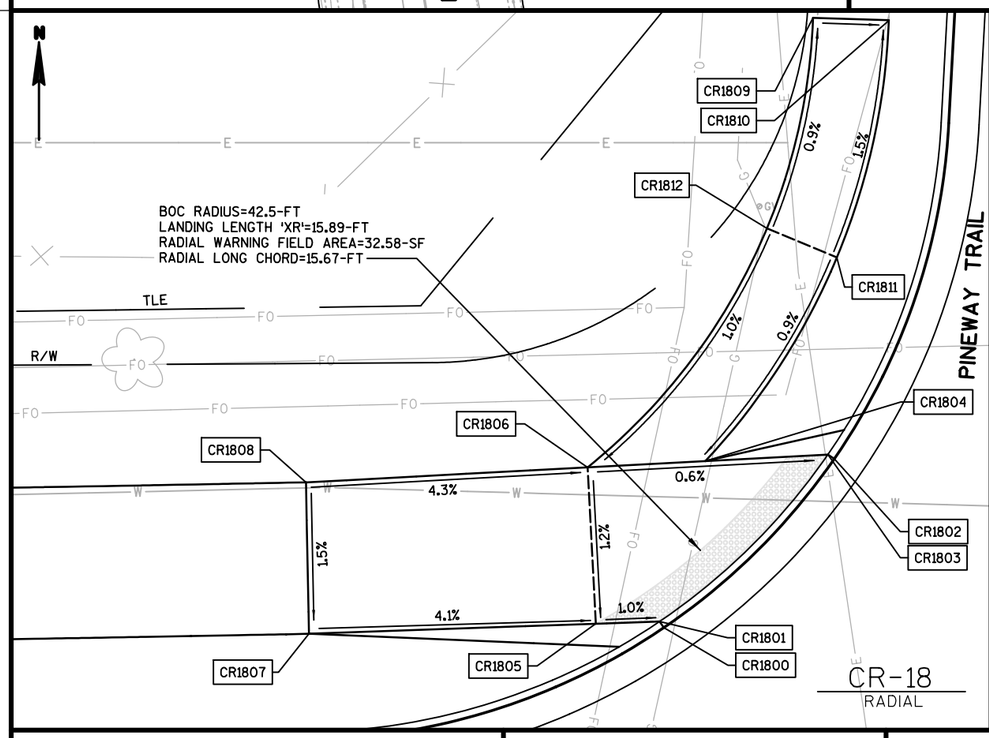

CR-18
RADIAL

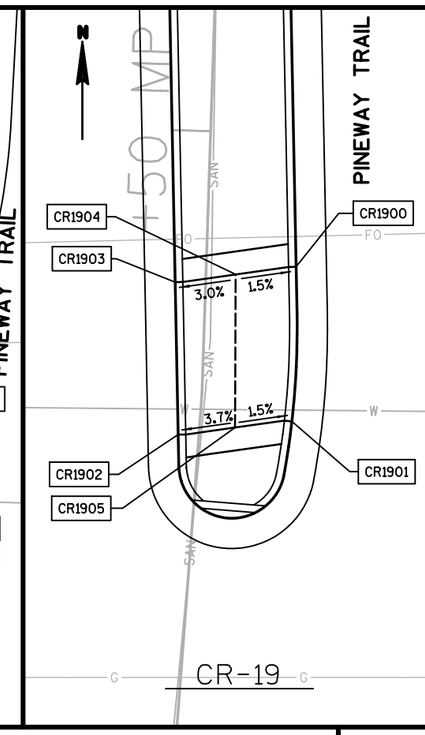

CR-19

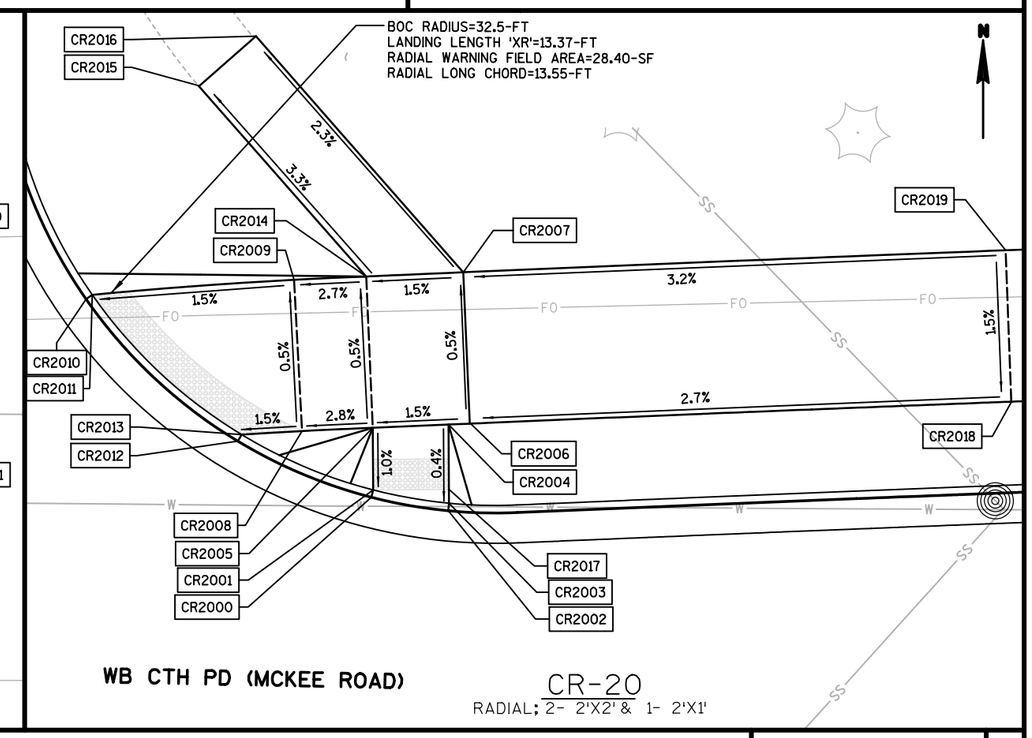

WB CTH PD (MCKEE ROAD)

CR-20
RADIAL; 2- 2'X2' & 1- 2'X1'

PROJECT NO:5849-02-02	HWY:CTH PD	COUNTY:DANE	CONSTRUCTION DETAILS - CURB RAMPS	SHEET 36	E

DRAFT

2

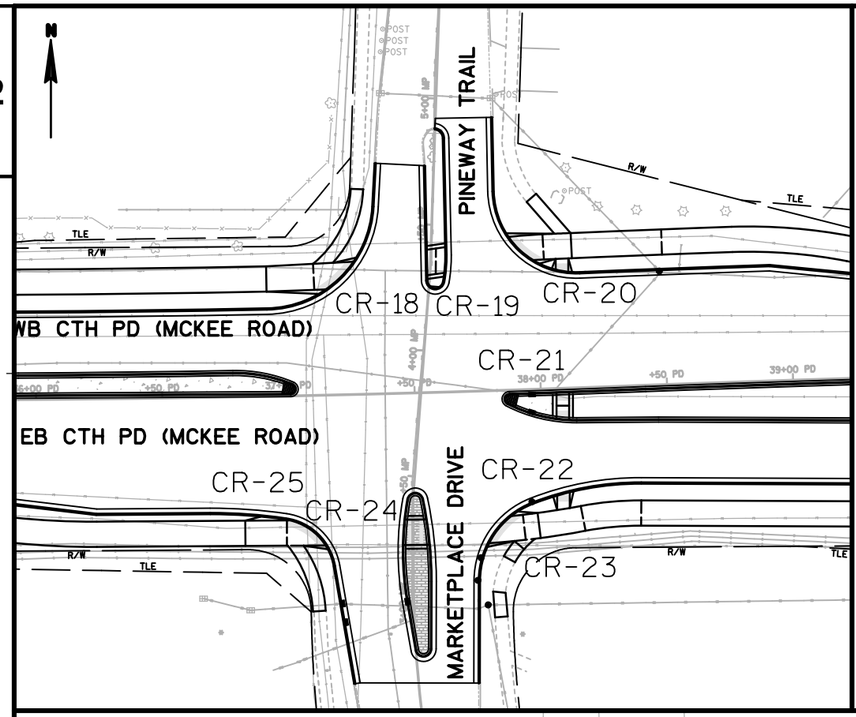

POINT NO.	CR-22 POINTS EB CTH PD (MCKEE ROAD) STATION	OFFSET		ELEV.
CR2200	138+06.30 EB	28.45	'RT	1023.49
CR2201	138+06.43 EB	28.93	'RT	1023.51
CR2202	138+11.32 EB	27.14	'RT	1023.55
CR2203	138+11.43 EB	27.62	'RT	1023.56
CR2204	138+06.43 EB	34.58	'RT	1023.73
CR2205	138+11.43 EB	33.78	'RT	1023.80
CR2206	138+15.80 EB	33.01	'RT	1023.87
CR2207	138+17.62 EB	42.84	'RT	1024.03
CR2208	138+39.76 EB	30.93	'RT	1024.62
CR2209	138+39.66 EB	40.93	'RT	1024.77
CR2210	138+11.43 EB	28.93	'RT	1023.57

POINT NO.	CR-23 POINTS MARKETPLACE DRIVE STATION	OFFSET		ELEV.
CR2300	3+23.68 MP	29.76	'RT	1023.52
CR2301	3+23.44 MP	30.20	'RT	1023.53
CR2302	3+34.55 MP	38.86	'RT	1023.45
CR2303	3+34.16 MP	39.16	'RT	1023.46
CR2304	3+24.20 MP	40.11	'RT	1023.62
CR2305	3+24.67 MP	44.55	'RT	1023.67
CR2306	3+34.59 MP	43.50	'RT	1023.52
CR2307	3+25.07 MP	48.34	'RT	1023.73
CR2308	3+25.34 MP	50.51	'RT	1023.76
CR2309	3+35.26 MP	49.26	'RT	1023.61
CR2310	3+20.91 MP	43.87	'RT	1023.70
CR2311	3+18.22 MP	35.89	'RT	*
CR2312	3+15.78 MP	40.26	'RT	*

* MATCH EXISTING

POINT NO.	CR-24 POINTS MARKETPLACE DRIVE STATION	OFFSET		ELEV.
CR2400	3+22.90 MP	3.99	'LT	1022.84
CR2401	3+32.98 MP	3.28	'LT	1022.88
CR2402	3+22.97 MP	6.45	'RT	1023.45
CR2403	3+33.03 MP	5.24	'RT	1023.33
CR2404	3+22.87 MP	2.99	'LT	1022.86
CR2405	3+22.88 MP	5.54	'RT	1023.46
CR2406	3+32.88 MP	4.25	'RT	1023.34

POINT NO.	CR-25 POINTS MARKETPLACE DRIVE STATION	OFFSET		ELEV.
CR2500	3+23.10 MP	34.42	'LT	1022.47
CR2501	3+22.83 MP	34.84	'LT	1022.48
CR2502	3+33.31 MP	49.13	'LT	1022.60
CR2503	3+32.82 MP	49.24	'LT	1022.61
CR2504	3+32.82 MP	50.03	'LT	1022.62
CR2505	3+22.82 MP	50.02	'LT	1022.70
CR2506	3+22.82 MP	49.72	'LT	1022.69
CR2507	3+22.82 MP	43.50	'LT	1022.61
CR2508	2+97.86 MP	34.98	'LT	*
CR2509	2+97.76 MP	39.98	'LT	*
CR2510	3+32.80 MP	66.51	'LT	1023.15
CR2511	3+22.80 MP	66.50	'LT	1023.30

* MATCH EXISTING

DRAFT

2

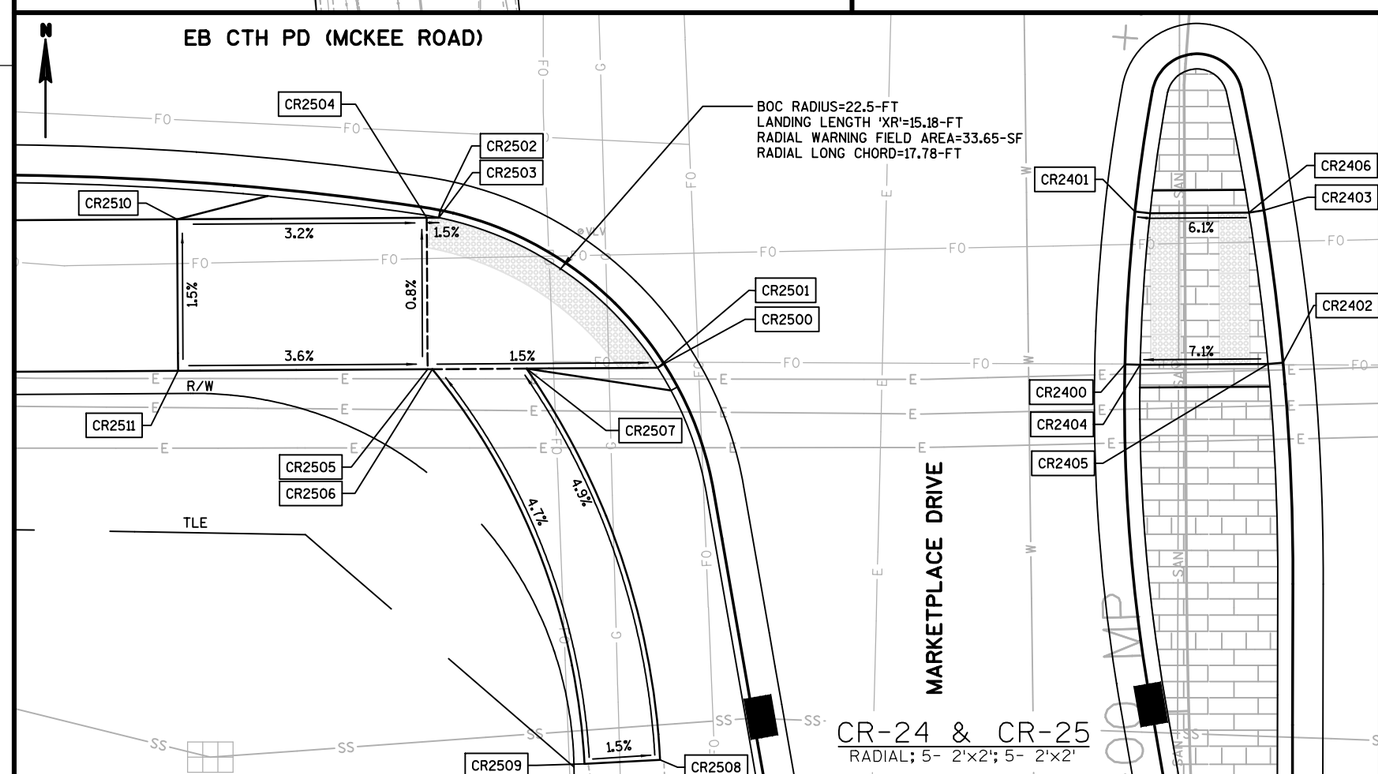

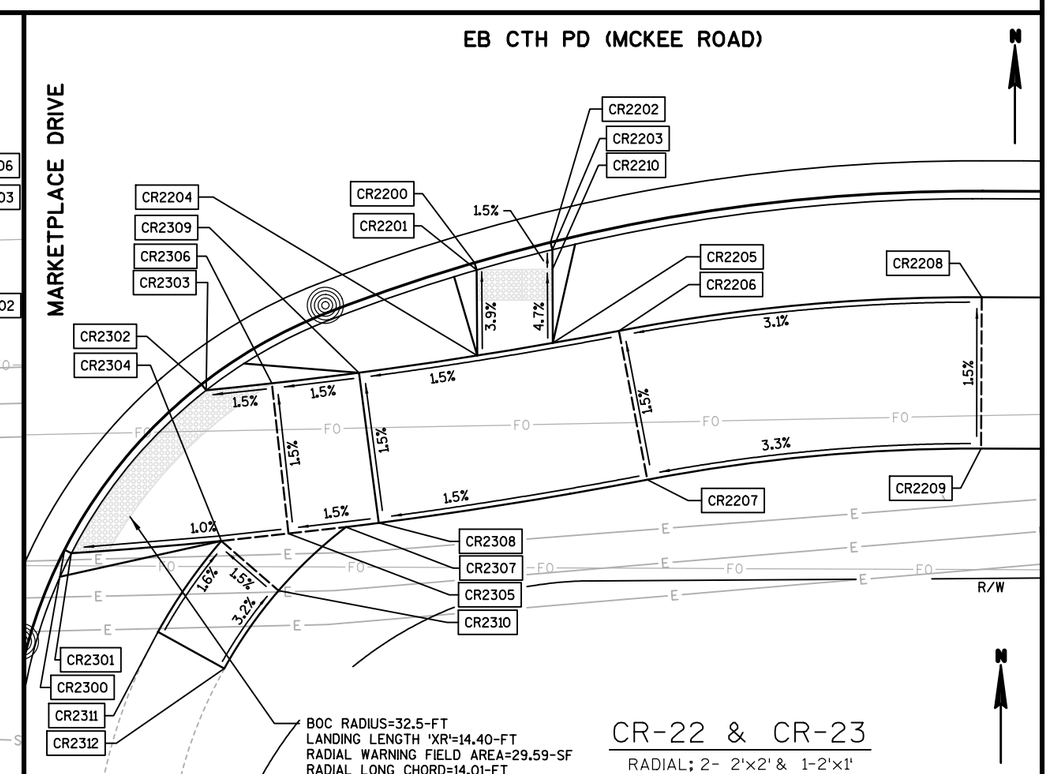

PROJECT NO:5849-02-02	HWY:CTH PD	COUNTY:DANE	CONSTRUCTION DETAILS - CURB RAMPS	SHEET 37	E

DRAFT

2

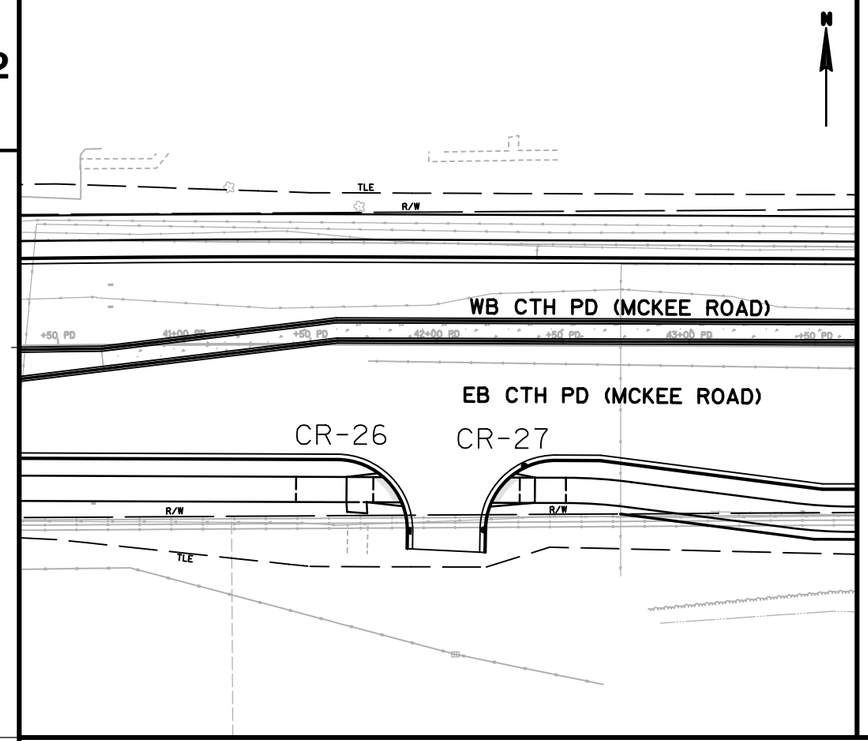

CR-26 POINTS				
	EB CTH PD (MCKEE ROAD)			
POINT NO.	STATION	OFFSET		ELEV.
CR2600	141+86.39 EB	40.80	'RT	1025.25
CR2601	141+85.94 EB	41.00	'RT	1025.26
CR2602	141+78.81 EB	30.62	'RT	1025.46
CR2603	141+78.49 EB	31.00	'RT	1025.47
CR2604	141+75.05 EB	41.00	'RT	1025.42
CR2605	141+75.05 EB	31.00	'RT	1025.51
CR2606	141+72.49 EB	41.00	'RT	1025.46
CR2607	141+72.73 EB	45.39	'RT	*
CR2608	141+64.68 EB	44.80	'RT	*
CR2609	141+64.48 EB	41.00	'RT	1025.58
CR2610	141+64.48 EB	31.00	'RT	1025.62
CR2611	141+44.48 EB	31.00	'RT	1026.45
CR2612	141+44.48 EB	41.00	'RT	1026.60

* MATCH EXISTING

CR-27 POINTS				
	EB CTH PD (MCKEE ROAD)			
POINT NO.	STATION	OFFSET		ELEV.
CR2700	142+21.73 EB	40.80	'RT	1025.17
CR2701	142+22.19 EB	41.00	'RT	1025.18
CR2702	142+29.32 EB	30.62	'RT	1025.32
CR2703	142+29.64 EB	31.00	'RT	1025.33
CR2704	142+33.08 EB	41.00	'RT	1025.32
CR2705	142+33.08 EB	31.00	'RT	1025.37
CR2706	142+39.08 EB	41.00	'RT	1025.52
CR2707	142+39.08 EB	31.00	'RT	1025.67
CR2708	142+51.37 EB	41.00	'RT	1026.08
CR2709	142+51.37 EB	31.00	'RT	1026.24

DRAFT

2

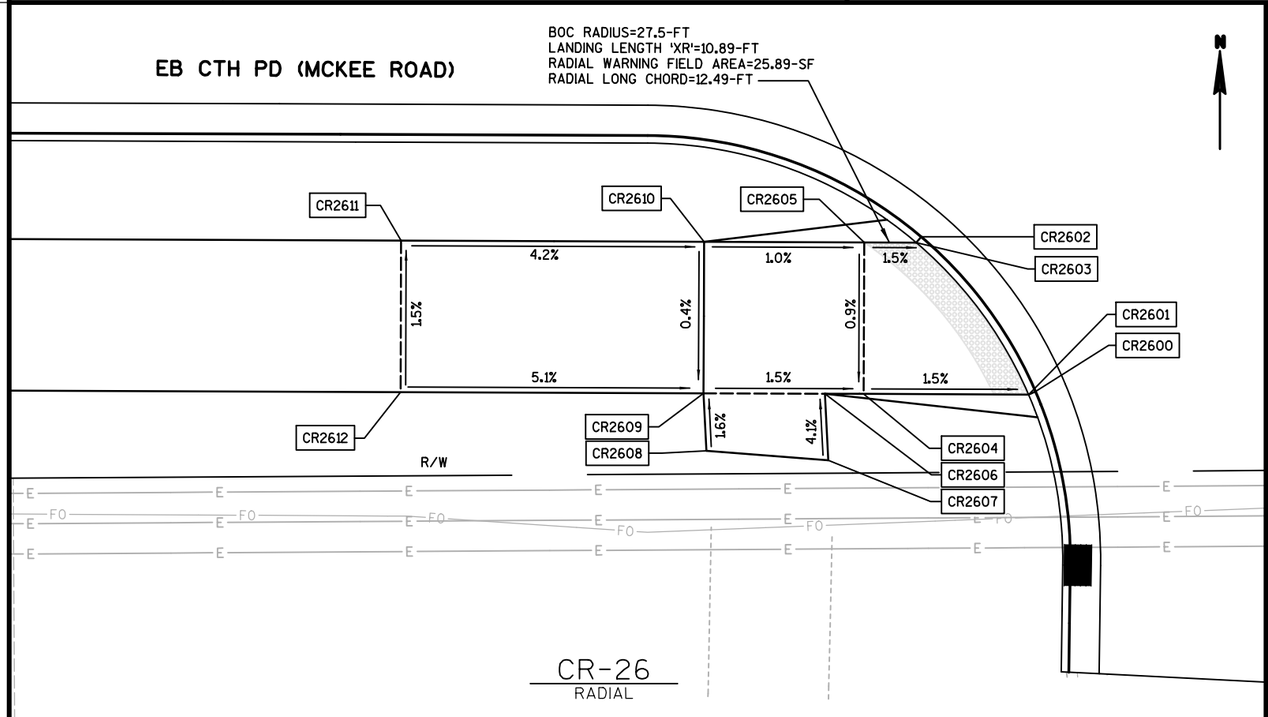

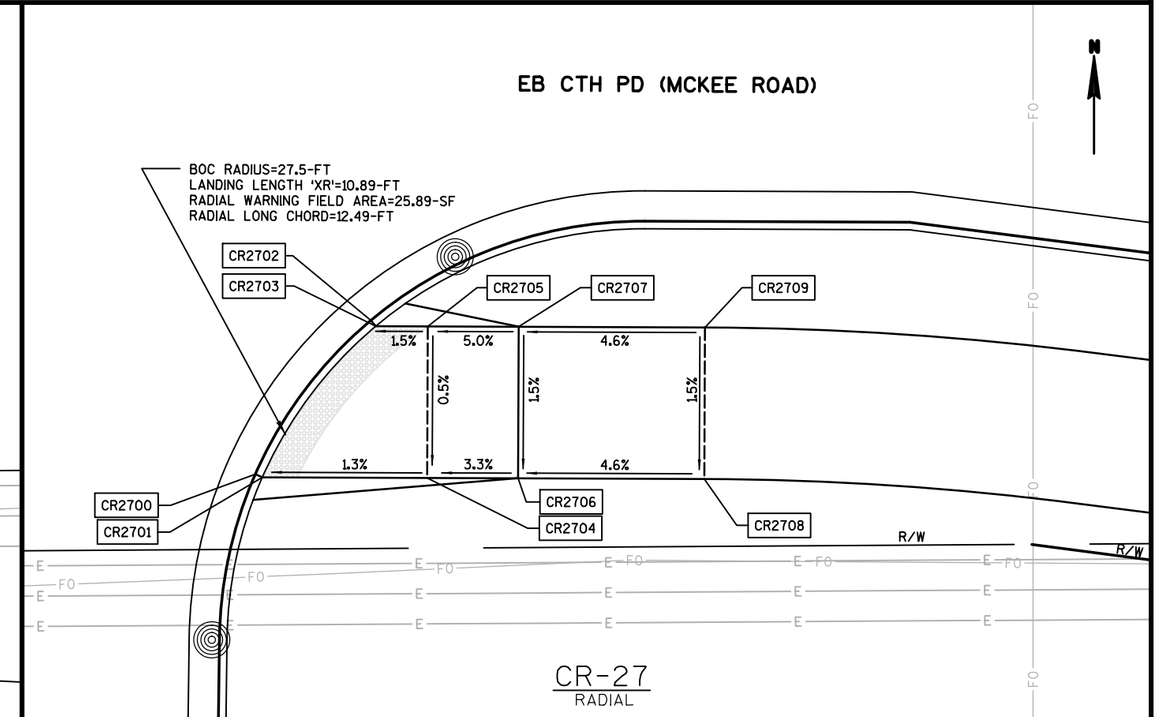

PROJECT NO: 5849-02-02	HWY: CTH PD	COUNTY: DANE	CONSTRUCTION DETAILS - CURB RAMPS	SHEET 38	E

DRAFT

2

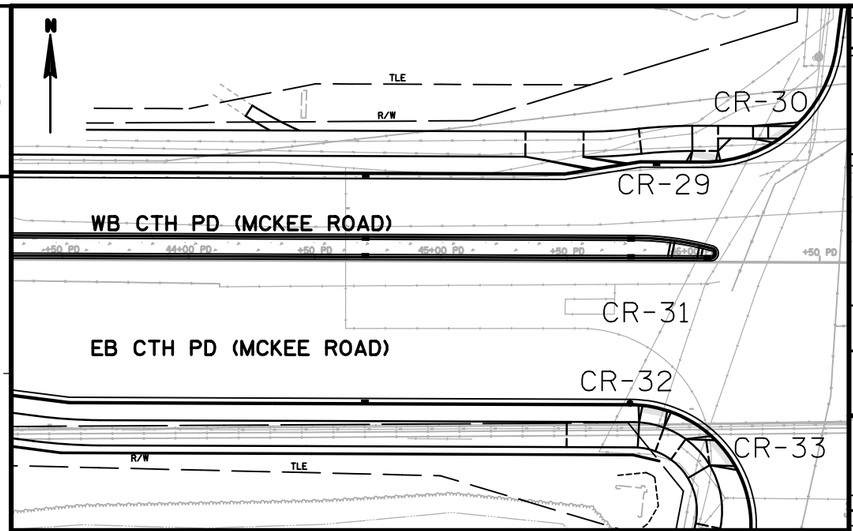

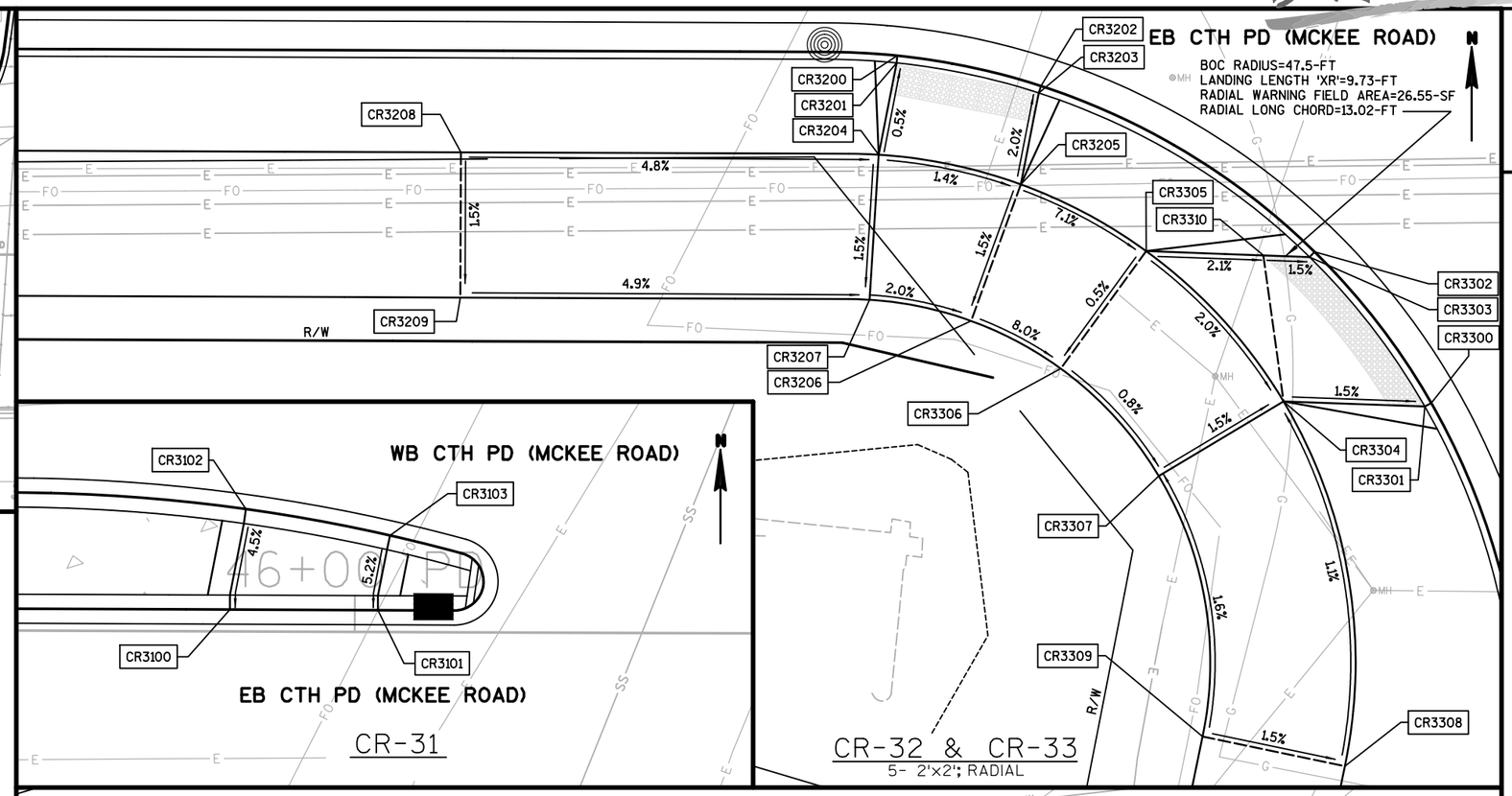

CR-29 POINTS				
POINT NO.	WB CTH PD (MCKEE ROAD)			
	STATION	OFFSET		ELEV.
CR2900	245+98.41 WB	29.00	'LT	1017.65
CR2901	245+98.41 WB	29.50	'LT	1017.66
CR2902	246+08.68 WB	29.23	'LT	1017.40
CR2903	246+08.63 WB	29.73	'LT	1017.42
CR2904	245+99.19 WB	33.58	'LT	1017.69
CR2905	246+09.36 WB	33.50	'LT	1017.54
CR2906	246+09.36 WB	38.50	'LT	1017.62
CR2907	245+99.10 WB	43.50	'LT	1017.84
CR2908	246+09.36 WB	43.50	'LT	1017.69
CR2909	245+79.04 WB	32.28	'LT	1018.70
CR2910	245+77.94 WB	42.22	'LT	1018.85
CR2911	245+56.07 WB	31.00	'LT	1019.17
CR2912	245+56.07 WB	41.00	'LT	1019.32
CR2913	245+33.03 WB	31.00	'LT	1020.15
CR2914	245+33.03 WB	41.00	'LT	1020.30

CR-32 POINTS				
POINT NO.	EB CTH PD (MCKEE ROAD)			
	STATION	OFFSET		ELEV.
CR3200	145+80.00 EB	35.23	'RT	1018.40
CR3201	145+79.96 EB	35.73	'RT	1018.41
CR3202	145+89.90 EB	37.29	'RT	1018.15
CR3203	145+89.75 EB	37.76	'RT	1018.16
CR3204	145+78.74 EB	42.06	'RT	1018.44
CR3205	145+88.54 EB	44.07	'RT	1018.30
CR3206	145+85.16 EB	53.48	'RT	1018.15
CR3207	145+78.16 EB	52.04	'RT	1018.29
CR3208	145+50.00 EB	42.00	'RT	1019.82
CR3209	145+50.00 EB	52.00	'RT	1019.67

CR-33 POINTS				
POINT NO.	SEMINOLE HIGHWAY			
	STATION	OFFSET		ELEV.
CR3300	6+03.96 SH	51.68	'LT	1017.21
CR3301	6+03.63 SH	52.06	'LT	1017.22
CR3302	6+12.63 SH	61.55	'LT	1017.42
CR3303	6+12.21 SH	61.83	'LT	1017.43
CR3304	6+02.11 SH	61.67	'LT	1017.36
CR3305	6+10.46 SH	72.93	'LT	1017.64
CR3306	6+01.39 SH	77.16	'LT	1017.59
CR3307	5+95.43 SH	69.11	'LT	1017.51
CR3308	5+78.28 SH	52.72	'LT	1017.65
CR3309	5+78.41 SH	62.72	'LT	1017.80
CR3310	6+11.72 SH	64.96	'LT	1017.47

CR-30 POINTS				
POINT NO.	SEMINOLE HIGHWAY			
	STATION	OFFSET		ELEV.
CR3000	7+42.41 SH	52.03	'LT	1016.68
CR3001	7+42.73 SH	52.42	'LT	1016.69
CR3002	7+36.35 SH	57.59	'LT	1016.81
CR3003	7+36.72 SH	57.93	'LT	1016.82
CR3004	7+36.14 SH	61.79	'LT	1016.83
CR3005	7+41.23 SH	62.52	'LT	1016.84
CR3006	7+35.23 SH	67.73	'LT	1017.04
CR3007	7+40.34 SH	68.45	'LT	1017.12
CR3008	7+33.89 SH	76.46	'LT	1017.41

CR-31 POINTS				
POINT NO.	WB CTH PD (MCKEE ROAD)			
	STATION	OFFSET		ELEV.
CR3100	245+91.22 WB	9.00	'RT	1018.16
CR3101	246+01.40 WB	9.00	'RT	1018.01
CR3102	245+92.30 WB	2.08	'RT	1018.43
CR3103	246+02.23 WB	3.85	'RT	1018.23

DRAFT

PROJECT NO:5849-02-02	HWY:CTH PD	COUNTY:DANE	CONSTRUCTION DETAILS - CURB RAMPS	SHEET 39	E

DRAFT

2

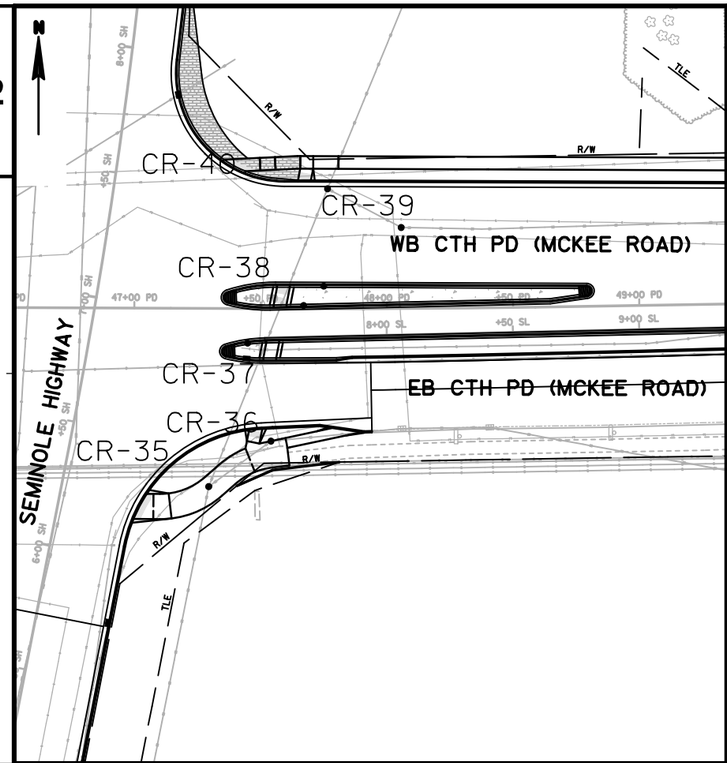

CR-35 POINTS SEMINOLE HIGHWAY				
POINT NO.	STATION	OFFSET		ELEV.
CR3500	6+16.74 SH	30.13	'RT	1016.48
CR3501	6+16.64 SH	30.62	'RT	1016.49
CR3502	6+27.63 SH	33.45	'RT	1016.55
CR3503	6+27.44 SH	33.91	'RT	1016.56
CR3504	6+18.08 SH	38.22	'RT	1016.60
CR3505	6+27.90 SH	36.36	'RT	1016.56
CR3506	6+19.74 SH	45.33	'RT	1016.69
CR3507	6+29.24 SH	42.21	'RT	1016.59

CR-36 POINTS EB CTH PD (MCKEE ROAD)				
POINT NO.	STATION	OFFSET		ELEV.
CR3600	147+45.55 EB	26.19	'RT	1016.87
CR3601	147+45.62 EB	26.68	'RT	1016.88
CR3602	147+50.77 EB	25.72	'RT	1016.86
CR3603	147+50.80 EB	26.22	'RT	1016.87
CR3604	147+50.53 EB	27.63	'RT	1016.89
CR3605	147+44.79 EB	30.99	'RT	1016.94
CR3606	147+49.70 EB	31.93	'RT	1016.97
CR3607	147+44.23 EB	33.91	'RT	1016.91
CR3608	147+48.00 EB	43.18	'RT	1017.06

CR-37 POINTS EB CTH PD (MCKEE ROAD)				
POINT NO.	STATION	OFFSET		ELEV.
CR3700	147+51.11 EB	1.00	'LT	1016.97
CR3701	147+56.21 EB	1.00	'LT	1016.98
CR3702	147+57.36 EB	9.05	'LT	1016.81
CR3703	147+52.22 EB	8.92	'LT	1016.78
CR3704	147+51.12 EB	2.00	'LT	1016.99
CR3705	147+56.21 EB	2.00	'LT	1017.00

CR-38 POINTS WB CTH PD (MCKEE ROAD)				
POINT NO.	STATION	OFFSET		ELEV.
CR3800	247+54.99 WB	10.00	'RT	1016.65
CR3801	247+60.10 WB	9.86	'RT	1016.67
CR3802	247+61.39 WB	1.00	'RT	1016.34
CR3803	247+56.30 WB	1.00	'RT	1016.35
CR3804	247+61.21 WB	2.94	'RT	1016.37
CR3805	247+55.17 WB	7.92	'RT	1016.64
CR3806	247+60.08 WB	8.86	'RT	1016.72
CR3807	247+54.96 WB	9.00	'RT	1016.66

CR-39 POINTS WB CTH PD (MCKEE ROAD)				
POINT NO.	STATION	OFFSET		ELEV.
CR3900	247+64.45 WB	40.00	'LT	1015.53
CR3901	247+64.45 WB	40.50	'LT	1015.54
CR3902	247+69.54 WB	40.00	'LT	1015.53
CR3903	247+69.54 WB	40.50	'LT	1015.54
CR3904	247+65.31 WB	45.00	'LT	1015.78
CR3905	247+70.40 WB	45.00	'LT	1015.86
CR3906	247+70.40 WB	50.00	'LT	1015.94
CR3907	247+65.31 WB	50.00	'LT	1015.86
CR3908	247+80.40 WB	45.00	'LT	1016.20
CR3909	247+80.40 WB	50.00	'LT	1016.28
CR3910	247+64.63 WB	41.44	'LT	1015.55

CR-40 POINTS SEMINOLE HIGHWAY				
POINT NO.	STATION	OFFSET		ELEV.
CR4000	7+60.14 SH	41.22	'RT	1015.13
CR4001	7+61.02 SH	41.67	'RT	1015.14
CR4002	7+56.78 SH	50.52	'RT	1015.29
CR4003	7+57.73 SH	50.76	'RT	1015.30
CR4004	7+58.82 SH	56.56	'RT	1015.33
CR4005	7+63.61 SH	55.62	'RT	1015.35
CR4006	7+59.92 SH	62.45	'RT	1015.51
CR4007	7+64.70 SH	61.52	'RT	1015.59

DRAFT

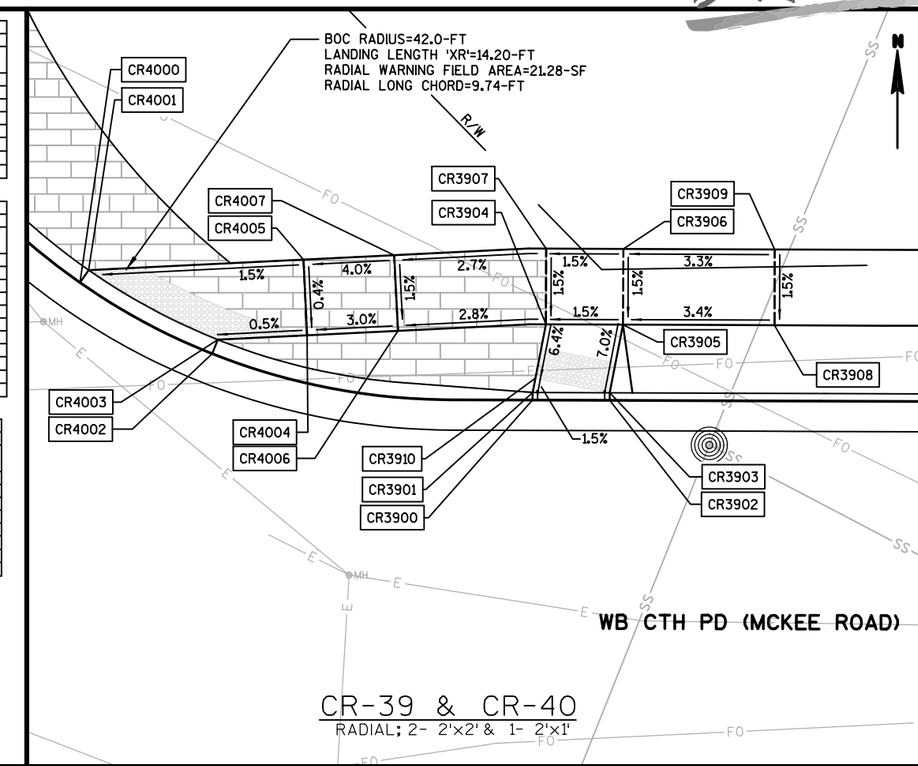

CR-39 & CR-40
RADIAL; 2- 2'x2' & 1- 2'x1'

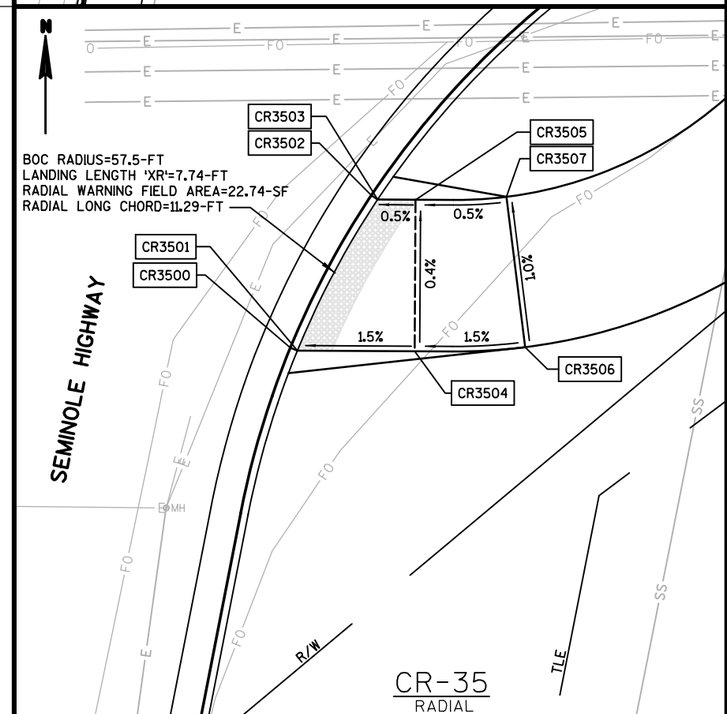

CR-35
RADIAL

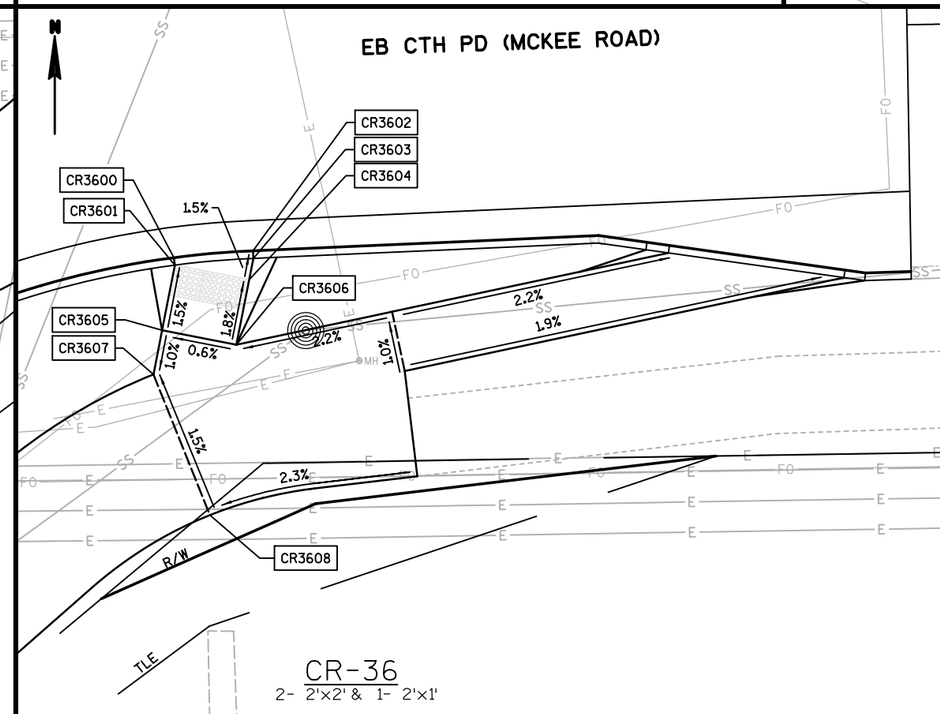

CR-36
2- 2'x2' & 1- 2'x1'

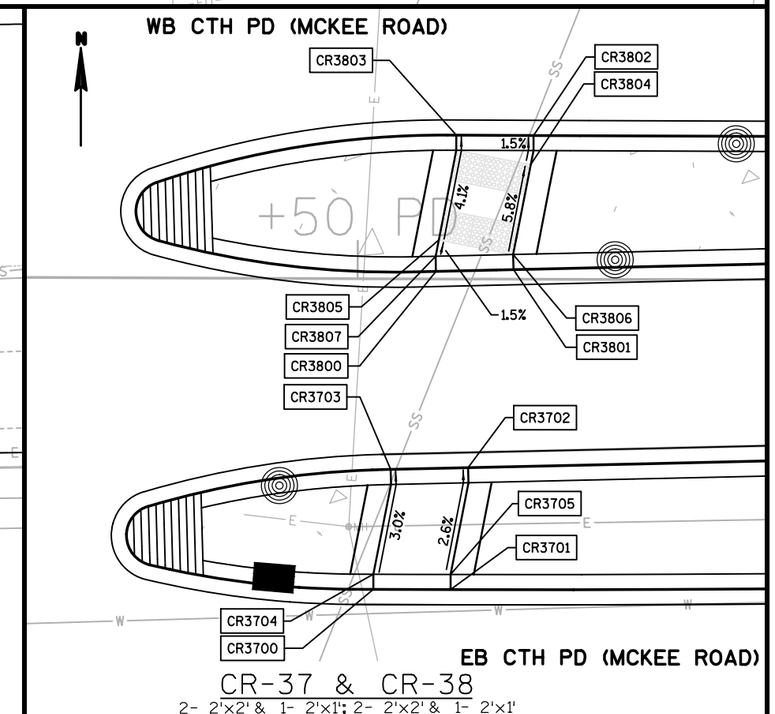

CR-37 & CR-38
2- 2'x2' & 1- 2'x1'; 2- 2'x2' & 1- 2'x1'

PROJECT NO: 5849-02-02	HWY: CTH PD	COUNTY: DANE	CONSTRUCTION DETAILS - CURB RAMPS	SHEET 40	E