Rec. 16.001323 5/30/19 $480.80 RB

THE CITY OF Fitchburg	City of Fitchburg Planning/Zoning Department 5520 Lacy Road Fitchburg, WI 53711 (608) 270-4200	**CONDITIONAL USE PERMIT APPLICATION**

The undersigned owner, or owner's authorized agent, of property herein described hereby applies for a conditional use permit for the following described property:

1. **Location of Property:**
   Street Address: 2845 Fish Hatchery Rd Fitchburg WI 53713
   Legal Description - (Metes & Bounds, or Lot No. And Plat):
   LOT 1 CSM 3505 CS14/71-73 R2030/45-47-7/...
   Parcel Number - 225/0609-031-1565-9

   ***Also submit in electronic format (MS WORD or plain text) by email to: **PLANNING@FITCHBURGWI.GOV**
2. **Current Use of Property:** McDonalds Restaurant
3. **Proposed Use of Property:** Same
4. **Proposed Development Schedule:** The work takes about 6 days from start to finish with a break for the concrete to
5. **Zoning District:**
6. **Future Land Use Plan Classification:**

***Pursuant to Section 22-3(b) of the Fitchburg Zoning Ordinance, all Conditional Use Permits shall be consistent with the currently adopted City of Fitchburg Comprehensive Plan.

***Attach three (3) copies of a site plan which shows any proposed land divisions, plus vehicular access points and thel ocation and size of all existing and proposed structures and parking areas. Two (2) of the three (3) copies shall be no larger than 11" x 17". Submit one (1) pdf document of the entire submittal to planning@fitchburgwi.gov.

Additional information may be requested.

Type of Residential Development (If Applicable):

No. of Dwelling Units by Bedroom: 1 BR ☐ 2 BR ☐ 3 BR ☐ 4 or More ☐

No. Of Parking Stalls: 34

Type of Non-residential Development (If Applicable): Restaurant

Proposed Hours of Operation: 24 hrs **No. Of Employees:**

Floor Area: **No. Of Parking Stalls:** 34

Sewer: Municipal ☑ **Private** ☐ **Water: Municipal** ☑ **Private** ☐

Current Owner of Property: MCDONALD'S REAL ESTATE COMPANY

Address: N3250 COUNTY HIGHWAY JPOYNETTE WI 53955 **Phone No:** (608) 274-9890

Contact Person: Janelle Kindred

Email: janelle.kindred@ussiglobal.com

Address: 9145 Ellis Rd, Melbourne, FL 32904 **Phone No:** 321 723-5395 x 228

Respectfully Submitted By:

Owner's or Authorized Agent's Signature

**** It is highly recommended that an applicant hold at least one neighborhood meeting prior to submitting an CUP application to identify any concerns or issues of surrounding residents.**

PLEASE NOTE - Applicants shall be responsible for legal or outside consultant costs incurred by the City. Submissions shall be made at least four (4) weeks prior to desired plan commission meeting.

For City Use Only: **Date Received:** 5/21/19 **Publish:**

Ordinance Section No. **Fee Paid:** $480.80

Permit Request No. CU-2295-19

McDONALD'S ODMB AERIAL MAPPING

NSN #: 5736
2845 FISH HATCHERY RD
FITCHBURG WI

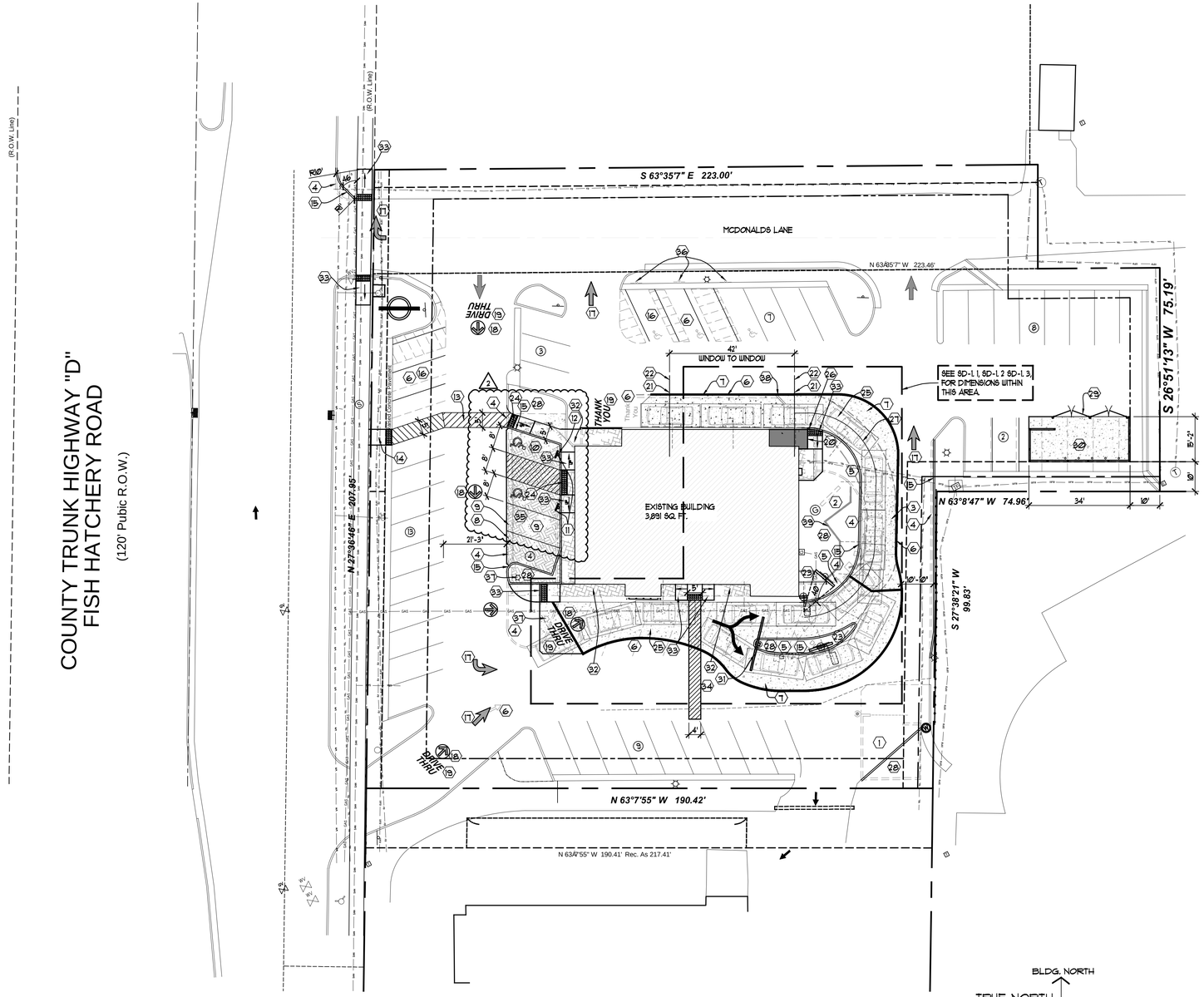

SITE LAYOUT and UTILITY PLAN

SCALE: 1" = 20'-0"

SITE SUMMARY INFORMATION:

ZONING: B-G GENERAL BUSINESS

LOT: CSM 03505, #115659

PARKING COUNT:

EXISTING: 53

PROPOSED: 46
(2 OF WHICH ARE ACCESSIBLE.)

ZONING REQUIRES (6) STALLS PER 1000 G.S.F OF BUILDING (=24 STALLS) OR (1) STALL PER (3) SEATS (101 SEATS = 34 STALLS) WITH THE FINAL LEVEL DETERMINED BY THE PLAN COMMISSION. BASED ON ZONING, USING THE MOST RESTRICTIVE METHOD, (34) STALLS ARE REQUIRED.

GREEN SPACE AREA:

EXISTING: 9,406 S.F.

PROPOSED: 9,719 S.F. (INCREASE OF 313 S.F.)

SITE LAYOUT PLAN KEYED NOTES:

THE FOLLOWING NOTES ARE ENCLOSED WITH A (X) SYMBOL:

1. DEMO EXISTING TRASH ENCLOSURE AND CONCRETE PAD. PATCH ASPHALT AS REQUIRED.
2. DEMO EXISTING MENU BOARD AND C.O.D. VERIFY W/ OWNER IF EQUIPMENT IS TO BE SAVED.
3. DEMO EXISTING CONCRETE DRIVE-THRU PAD.
4. DEMO EXISTING CURBING AS INDICATED THUS. PATCH ASPHALT OR CONCRETE AS REQUIRED.
5. REMOVE ASPHALT AND COMPACTED STONE BASE AT NEW LANDSCAPED LOCATIONS.
6. REMOVE EXISTING PARKING LOT STRIPING, ARROWS, AND/OR WORDING AS INDICATED. RESEAL LOT AS REQUIRED. SEE KEYED NOTE #6.
7. SAW CUT ASPHALT FOR NEW CONCRETE DRIVE-THRU LANE. SEE SD SHEETS FOR LAYOUT.
8. SAW CUT ASPHALT FOR NEW CONCRETE ADA PARKING PAD AND DUMPSTER APRON.
9. CONCRETE PAD AT ADA PARKING PER DETAIL 12/SD-4. CORNERS OF PAD TO BE CUT AT 45°, 12' BACK, TO AVOID CRACKING OF CORNERS. PAD TO HAVE 2% MAX SLOPE ANY DIRECTION.
10. NEW ACCESSIBLE PARKING & ACCESS AISLES WITHIN THIS AREA TO HAVE 1.5-1.8% MAX SLOPE IN ANY DIRECTION. VERIFY EXISTING SLOPE AND PAVEMENT CONDITION. IF RE-PAVING THIS AREA IS REQ'D, SEE KEYED NOTE #3.
11. NEW ADA PARKING SPACE SIGNAGE ATTACHED TO NEW BOLLARD PER DETAIL 1/SD-3. MOUNT SIGNS SO AS BOTTOM OF LOWEST SIGN IS 5'-0" ABOVE ASPHALT GRADE. VERIFY WITH LOCAL MUNICIPALITY IF "FINE" SIGN IS REQ'D.
12. NEW VAN ACCESSIBLE PARKING SPACE SIGNAGE ATTACHED TO NEW BOLLARD PER DETAIL 1/SD-3. MOUNT SIGNS SO AS BOTTOM OF LOWEST SIGN IS 5'-0" ABOVE ASPHALT GRADE. VERIFY WITH LOCAL MUNICIPALITY IF "FINE" SIGN IS REQ'D.
13. NEW 5' WIDE STRIPED ACCESSIBLE ROUTE. PAINT COLOR: WHITE.
14. NEW PEDESTRIAN CONNECTION TO PUBLIC SIDEWALK (4.8% MAX. RUNNING SLOPE, 1.5-1.8% CROSS SLOPE, MAX.) W/ NON-SLIP BROOM FINISH. TOOLED JOINTS TO BE 1/4 DEPTH OF SLAB. JOINTS IN CONC. AT 5'-0" O.C. OR AS ILLUSTRATED ON PLAN. PROVIDE CURB CUT AT EXISTING CURB. SEE DETAILS 6/SD-4 & 7/SD-4.
15. NEW CONCRETE CURBS. CONTRACTOR OPTION: 6x18 PER DETAIL 2/SD-4 OR EXTRUDED CURB & GUTTER PER DETAIL 3/SD-4.
16. PARKING LOT STRIPING AND ACCESSIBLE PARKING COLOR: WHITE. LOT STRIPING TO REMAIN SHALL BE REPAINTED SIMILAR TO EXISTING AFTER RESURFACING (SEE KEYED NOTE #06.).
17. LOT DIRECTIONAL ARROW PAINT COLOR: WHITE. SEE DETAIL 9/SD-4. SEE GENERAL NOTE #8 FOR STENCIL SUPPLIER.
18. NEW CIRCULAR DRIVE THRU DIRECTIONAL ARROW PAINT COLOR: SAFETY YELLOW. SPACE EVERY 50'-0" TO 60'-0". SEE DETAIL 9/SD-4. SEE GENERAL NOTE #8 FOR STENCIL SUPPLIER.
19. "DRIVE THRU" AND "THANK YOU" PAVEMENT MARKING. PAINT COLOR: SAFETY YELLOW. SEE DETAIL 9/SD-4. SEE GENERAL NOTE #8 FOR STENCIL SUPPLIER. LOCATE "THANK YOU" 20' FROM THE CENTER LINE OF OF PRESENTER BOOTH WINDOW TO THE BOTTOM OF THE WORD "YOU".
20. NEW CASH BOOTH ADDITION. SEE SHEET 1/A-1.3.
21. CENTERLINE OF CASH BOOTH OR PRESENTER WINDOW.
22. NEW CASH BOOTH & PRESENTER BOOTH DETECTOR LOOPS PER DETAILS 2/SD-3 & 3/SD-3. PRESENTER BOOTH LOOP MAY NOT BE SHOWN ON THIS PLAN. ON REMODEL, VERIFY IF LOOPS EXIST OR ARE REQUIRED WITH DRIVE THRU SYSTEM USED.
23. NEW SIDE BY SIDE DRIVE THRU SYSTEM INCLUDES: MENU BOARDS, C.O.D.'S & DRIVE THRU DETECTOR LOOPS. SEE SD SHEETS FOR LAYOUT DIMENSIONS & DETAILS.
24. ADA COMPLIANT TACTILE WARNING STRIP.
25. NEW CONCRETE DRIVE-THRU LANE PER DETAILS 10/SD-4 & 12/SD-4. CORNERS OF PAD TO BE CUT AT 45°, 12' BACK, TO AVOID CRACKING OF CORNERS.
26. NEW STANDARD PIPE BOLLARD, PER DETAIL 1/SD-3. COLOR: SAFETY YELLOW.
27. DRIVE-THRU LANE CENTERLINE DISTANCE FROM CASH BOOTH TO PRIMARY C.O.D. 99'-1".
28. LANDSCAPED AREA PER LANDSCAPE PLANS - MAY NOT BE INCLUDED WITHIN THESE CONSTRUCTION DOCUMENTS - VERIFY WITH DRAWING INDEX ON COVER SHEET.
29. NEW TRASH ENCLOSURE. SEE SHEET SD-5.
30. NEW CONCRETE PAD AT NEW TRASH AND STORAGE ENCLOSURE. SEE SHEET SD-5.
31. NEW DOUBLE GATEWAY SIGN.
32. REMOVE PAVER WALKS AND REPLACE WITH BROOM FINISHED CONCTRETE.
33. ACCESSIBLE CURB RAMPS, 7.8% MAX SLOPE RUNNING, 1.5% CROSS SLOPE MAX. PROVIDE CANE DETECTABLE WARNINGS AS SHOWN. CONCRETE TO BE NATURAL, BROOM FINISHED.
34. PEDESTRIAN CROSS WALK. PROVIDE STRIPING AS INDICATED. PROVIDE COLOR CONCRETE WHERE ACCESS PASSES THROUGH CONCRETE DRIVE THRU LANE.
35. DEMO EXISTING RUBBER PLAYMAT, FENCING, PLANTS, AND RONALD McDONALD STATUE.
36. REMOVE EXISTING ADA PARKING SIGNAGE.
37. RELOCATE EXISTING LIGHT POLE.
38. BLEND NEW CONCRETE DRIVE-THRU LANE INTO EXISTING CONCRETE PAD.
39. DEMO EXISTING WOOD WALL.

haag müller, inc.
Architecture ▪ Engineering ▪ Interiors
101 East Grand Avenue, Suite 1
Port Washington, Wisconsin 53074
262. 268.1200 www.haagmuller.com
COPYRIGHT 2012 © - All Rights Reserved

SITE LAYOUT PLAN

MAJOR REMODEL PROGRAM
MCDONALD'S RESTAURANT
2845 FISH HATCHERY ROAD
FITCHBURG, WI 53713

REVISIONS

NO.	DATE	DESCRIPTION
1	05-01-12	General updates per Planning Dept comments.
2	06-13-12	Changes per Modification #1

DATE: 04-17-12
PROJ. NO: 1201102
DRAWN BY: HMI
SHEET
C-1.1

ODMB Permitting

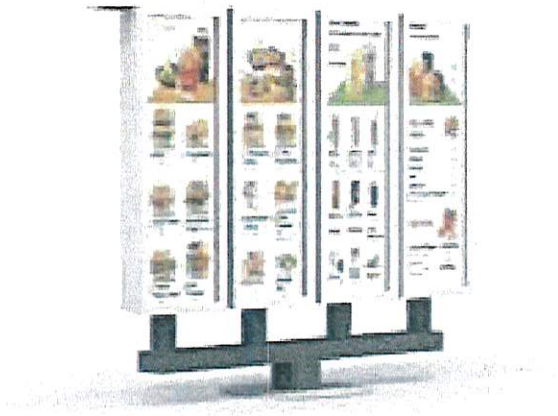

Existing Menu Board

- ❑ OPO Menu Board Approximately 41 sf
- ❑ FP-43 Menu Board Approximately 43 sf

Digital Menu Board

- ❑ Approximately 20 square feet

Digital Pre-Browse Board

- ❑ Approximately 10 square feet

single panel menu board 10.06 sq. ft.

double panel menu board 19.79 sq. ft.

coates

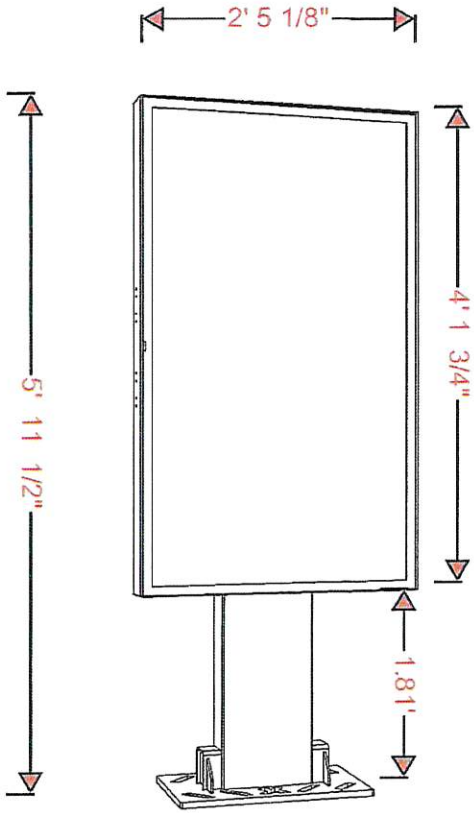

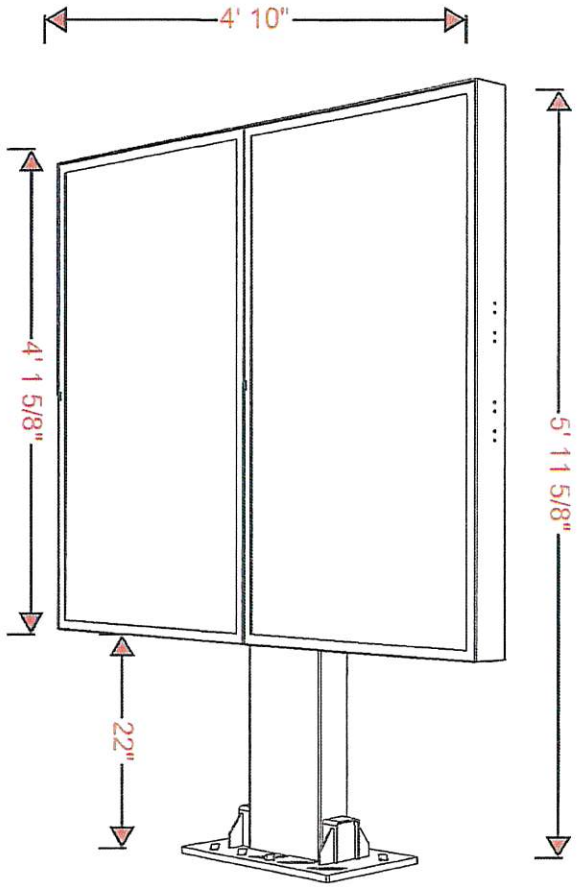

55" Outdoor digital menuboard

02-55-2S/D Outdoor Menu Board

Permitting Unit Information

Not site specific drawings.

Version 1.0

Coates ODMB

Power draw

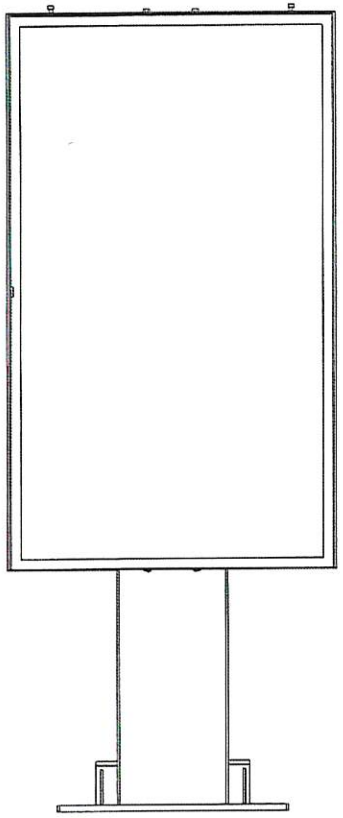

Max potential draw 5.7A @110V

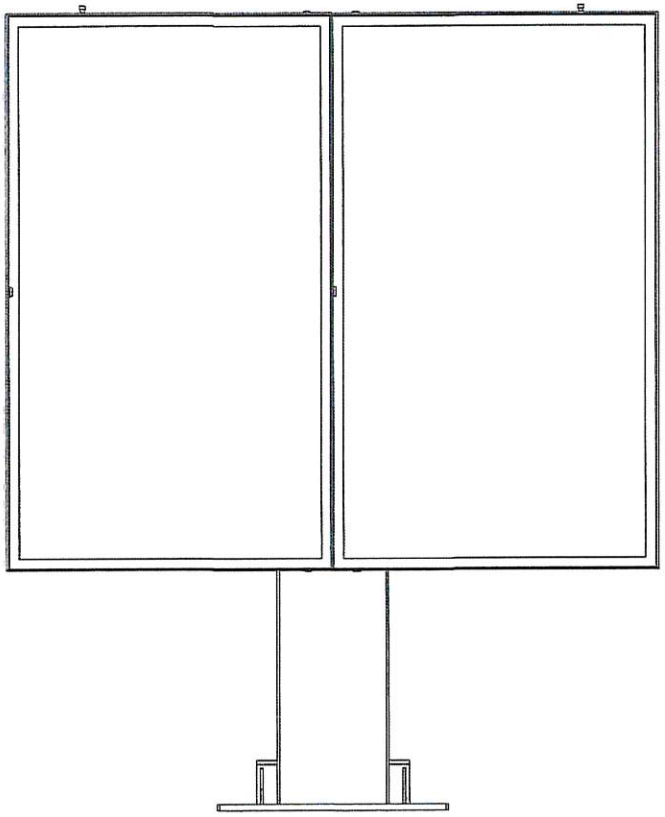

Max potential draw 9.8A @110V

UL48 Electric sign

Coates ODMB

Single screen unit

Area of display

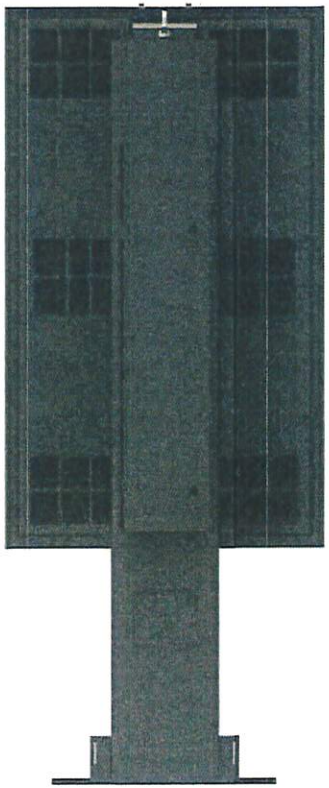

SIGN CABINET DESIGN BY OTHERS.

ELECTRICAL/ILLUMINATION DESIGN BY OTHERS.

ALL STEEL SHALL BE HOT DIP GALVANIZED.

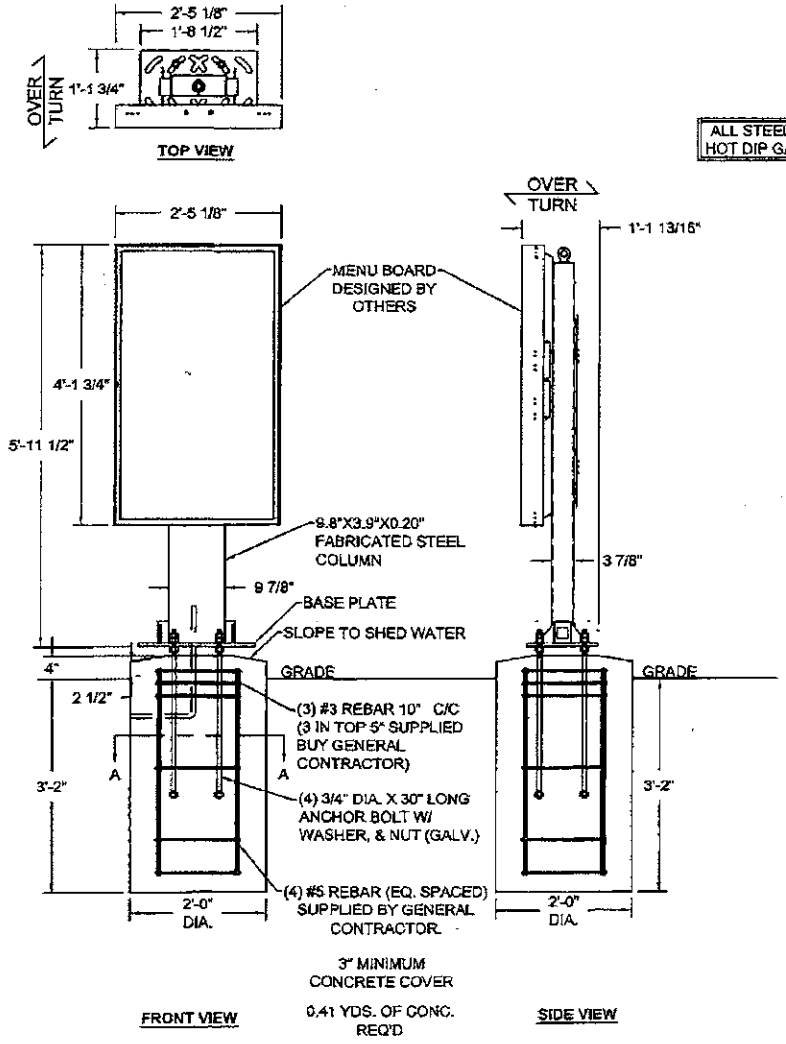

Notes:

1. This is a prototypical design based on the following design criteria:
   Building Code: IBC 2015
   Wind Speed: 115 MPH, Exposure C
   Category II
2. Foundation analysis assumes soil class 4. The allowable bearing pressure should be verified prior to placement of concrete. In the event that the stated requirements are not met and conditions appear deleterious, cease and secure excavation and immediately contact THE CLIENT.
3. Caisson foundation is based on a presumptive safe lateral soil bearing pressure minimum of 150 psf per foot of depth. Isolated lateral bearing footings subject to short-term lateral loads and not adversely affected by a 1/2" motion at grade are permitted to be designed using twice the tabulated value of the corresponding soil class.
4. Foundation shall not be placed on, or at the top of a slope exceeding 3:1 without evaluation by a competent Professional Engineer. Do not place foundation in fill.
5. Concrete shall be mixed to attain a minimum 28 day compressive strength of 3000 psi.
6. Steel reinforcing bars shall conform to ASTM A615, Grade 60 with deformations, in accordance with ASTM A305. Welding of reinforcement is prohibited.
7. Anchor bolts shall meet ASTM F1554 Grade 36 and shall be galvanized to prevent corrosion.
8. All support members shall be free from defects. Steel tubes shall meet ASTM A500 Grade B with a minimum yield strength of 46000 psi. Steel pipe shall meet ASTM A53 Grade B with a minimum yield strength of 35000 psi. Steel angle, channel, and plate shall meet ASTM A36.
9. Steel welds shall be made with E70XX electrodes by persons qualified in accordance with AWS standards within the past two years.
10. Structural bolts shall meet ASTM A325 and be zinc coated unless noted otherwise. Heavy hex nuts shall meet ASTM A563 and washers shall meet ASTM F436 when used with high strength bolts. All high strength bolts shall be tightened using the Turn-of-Nut method unless noted otherwise.
11. This engineer will not be responsible for safety on the jobsite before, during, or after the installation of this structure. It is the responsibility of the owners, contractors, and installers to ensure that the installation of this structure is completed using methods that fully comply with OSHA regulations.
12. Any deviation from this design or from any part of this drawing without prior written consent of this engineer voids this drawing in its entirety.
13. The design depicted on this drawing is prototypical, and should not be used at a specific site unless deemed suitable for that site by a competent Professional Engineer.

NOTE: All designs depicted on this drawing are the sole property of Campbell Consulting Engineering, LLC developed specifically for this project. Use of these designs for any purpose other than the intended application without written consent of Campbell Consulting Engineering, LLC is prohibited. Disclosure of the information presented herein, without Owner's consent, is a violation of intellectual property and copyright laws.

GREGORY A. CAMPBELL REGISTERED ENGINEER AGRICULTURE No. 21972 STATE OF TENNESSEE

5-16-18

McDONALD'S SINGLE FACE MENU BOARD
PROTOTYPICAL 115 MPH-INSTALL

CLIENT:
coates
COATES
1142 W. MADISON STREET, SUITE 304
CHICAGO, IL 60607

CAMPBELL CONSULTING ENGINEERING, LLC
382 HIGH STREET
MARYVILLE, TN 37804
865-980-8881
CCENGINEER.COM

SHEET	BY	PROJECT NO.
1	RDG	17-0140-E
OF 2	DATE 5/16/2018	DRAWING NO. -B101020-B

May 16, 2018		
PROJECT #	17-0140-E	
DRAWING #	B1010208	
WIND SPEED	115	MPH
WIND LOAD	21.05	PSF
BUILDING CODE	IBC 2015	

OWNER: McDONALD'S - 1 FACE MENUBOARD
PROTOTYPICAL
115 MPH

CLIENT: COATES
1142 W. MADISON STREET, SUITE 304
CHICAGO, IL 60607

Description	Height (FT)	Width (FT)	Shape Factor	CF Adjust.	Centroid (FT)	Area (SF)	Wind Force (K)	Moment (K-FT)
SIGN	4.133	2.398	1.000	1.000	2.067	9.913	0.209	0.431
COLUMN	1.833	0.492	1.000	1.232	0.917	0.901	0.232	0.635
OVERALL HEIGHT	5.967							

COLUMN CALCULATIONS

T= TUBE; P = PIPE; W = WIDE-FLANGE; O = OTHER

	Description	Column Depth (IN)	Column Width (IN)	Wall Thickness (IN)	Ixx (IN^4)	Sxx (IN^3)	Zxx (IN^3)	DESIGN MOMENT (K-FT)	NOMINAL FLEXURAL STRENGTH (K-FT)	UNITY
T	SIGN	3.900	9.800	0.200	14.482	7.427	7.748	0.431	11.694	0.037
T	COLUMN	3.900	9.800	0.200	14.482	7.427	7.748	0.635	11.694	0.072

BOLT CALCULATIONS

Description	MOMENT (K-FT)	BOLT SPACING (IN)	BOLT QTY	BOLT DIAMETER (IN)	BOLT AREA IN^2	BOLT TENSION (K)	BOLT SHEAR (K)	BOLT TENSION CAPACITY (K)	BOLT SHEAR CAPACITY (K)	COMBINED UNITY CHECK
BASE PLATE	0.635	8.000	4	0.750	0.442	0.626	0.058	8.438	5.964	0.074

PLATE CALCULATIONS

Description	TENSION PER BOLT (K)	MOMENT ARM IN	PLATE MOMENT K-IN	PLATE WIDTH IN	PLATE DEPTH IN	PLATE THICK. IN	MINIMUM PLATE THICK. IN
BASE PLATE	0.626	2.000	1.253	3.000	12.600	0.625	0.313

FOUNDATION CALCULATIONS

CAISSON FOUNDATION

MOMENT AT GRADE	0.635	K-FT
SHEAR AT GRADE	0.232	K
REFERENCE IBC 1807.3.2 & TABLE 1806.2		
ASSUME SOIL CLASS 04 - SW, SP, SM, SC, GM, & GC		
LATERAL BEARING PRESSURE - PSF/FT OF DEPTH	150.000	PSF/FT
S1	333.300	
DEPTH	3.333	FT
DIAMETER	2.000	FT
h	3.604	FT
A	0.814	
CALCULATED DEPTH	2.240	FT
CONCRETE REQUIRED	0.388	YD^3

ALL STEEL SHALL BE HOT DIP GALVANIZED.

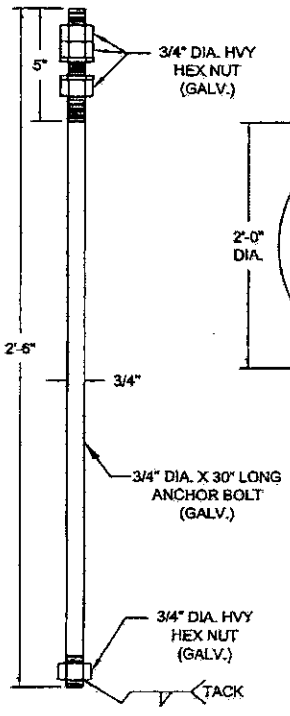

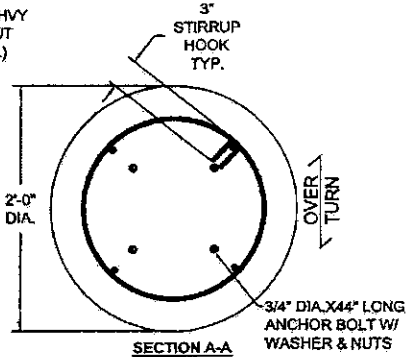

SECTION A-A

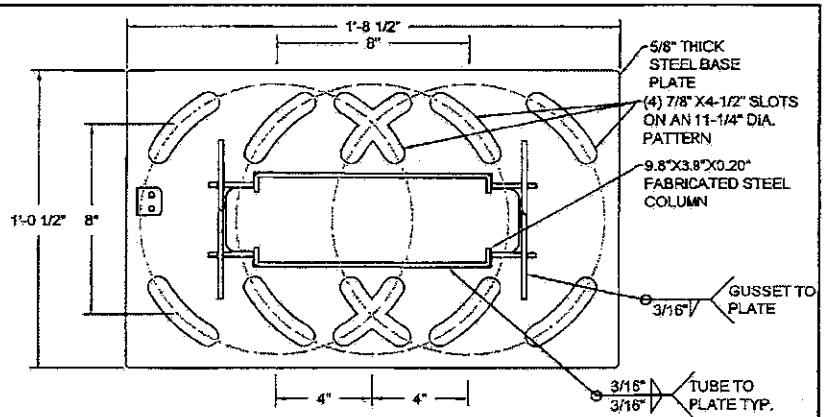

BASE PLATE DETAIL

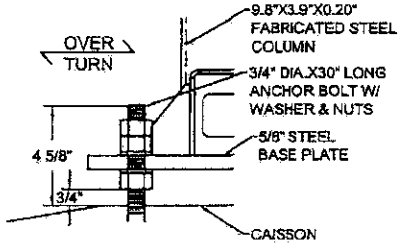

ANCHOR BOLT PROJECTION DETAIL

NOTE: All designs depicted on this drawing are the sole property of Campbell Consulting Engineering, LLC developed specifically for this project. Use of these designs for any purpose other than the intended applicable individual written consent of Campbell Consulting Engineering, LLC is prohibited. Distribution of the information provided herein, without Owner's consent, is a violation of intellectual property and will not be tolerated.

GREGORY D. CAMPBELL
REGISTERED ENGINEER
AGRICULTURE
No. 21873
STATE OF TENNESSEE

5-16-18

McDONALD'S SINGLE FACE MENU BOARD
PROTOTYPICAL 115 MPH-INSTALL

CLIENT:
coates
COATES
1142 W. MADISON STREET, SUITE 304
CHICAGO, IL 60607

CAMPBELL CONSULTING ENGINEERING, LLC
382 HIGH STREET
MARYVILLE, TN 37804
865-980-8881
CCENGINEER.COM

SHEET	BY	PROJECT NO.
2	RDG	17-0140-E
OF 2	DATE 5/16/2018	DRAWING NO. B101020-B

Coates ODMB

Double screen unit

coates

Area of display

Area of display

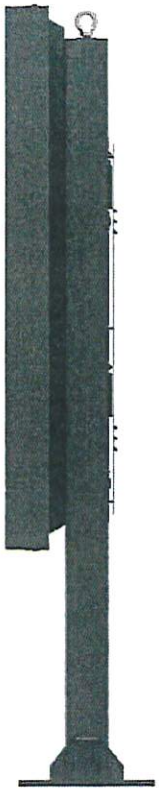

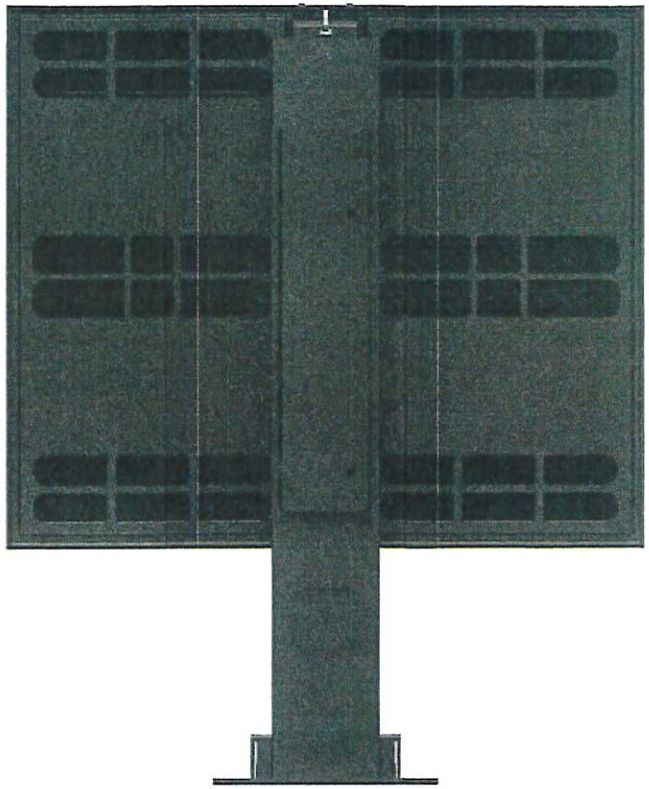

Coates ODMB

Double screen unit

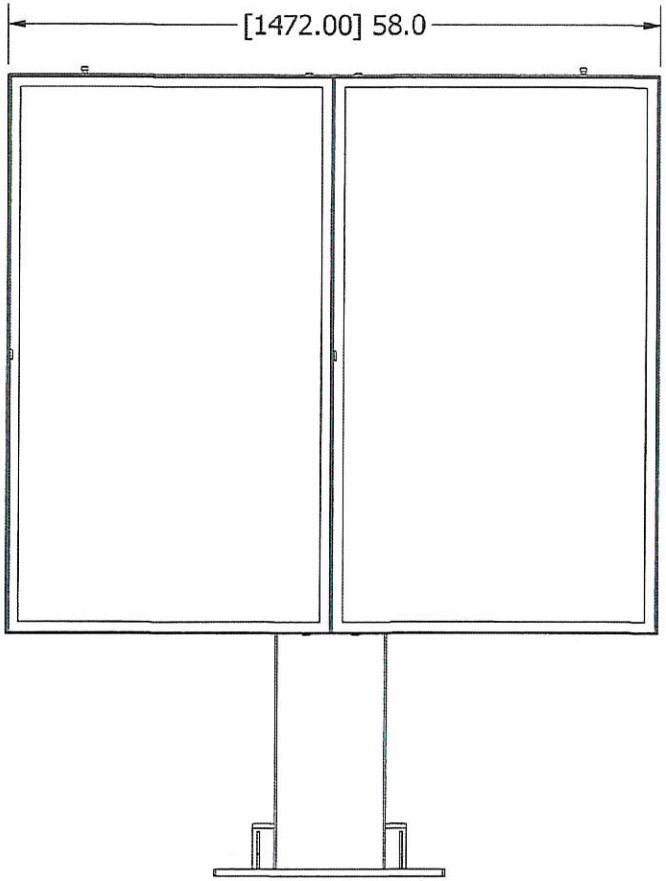

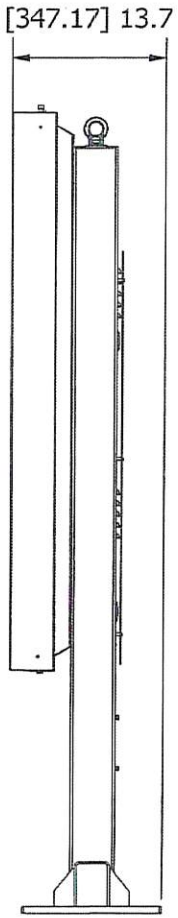

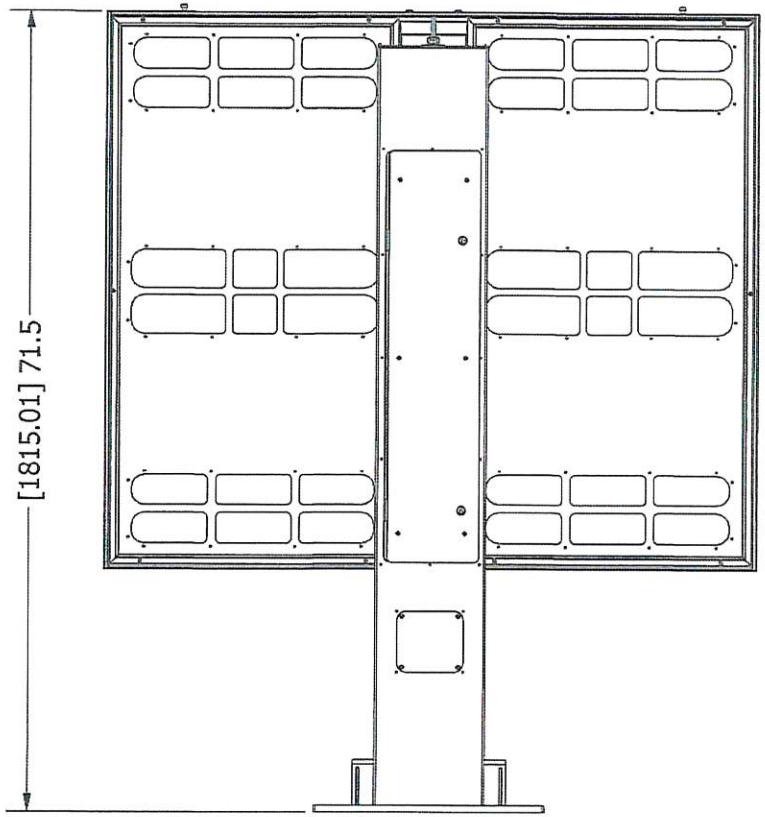

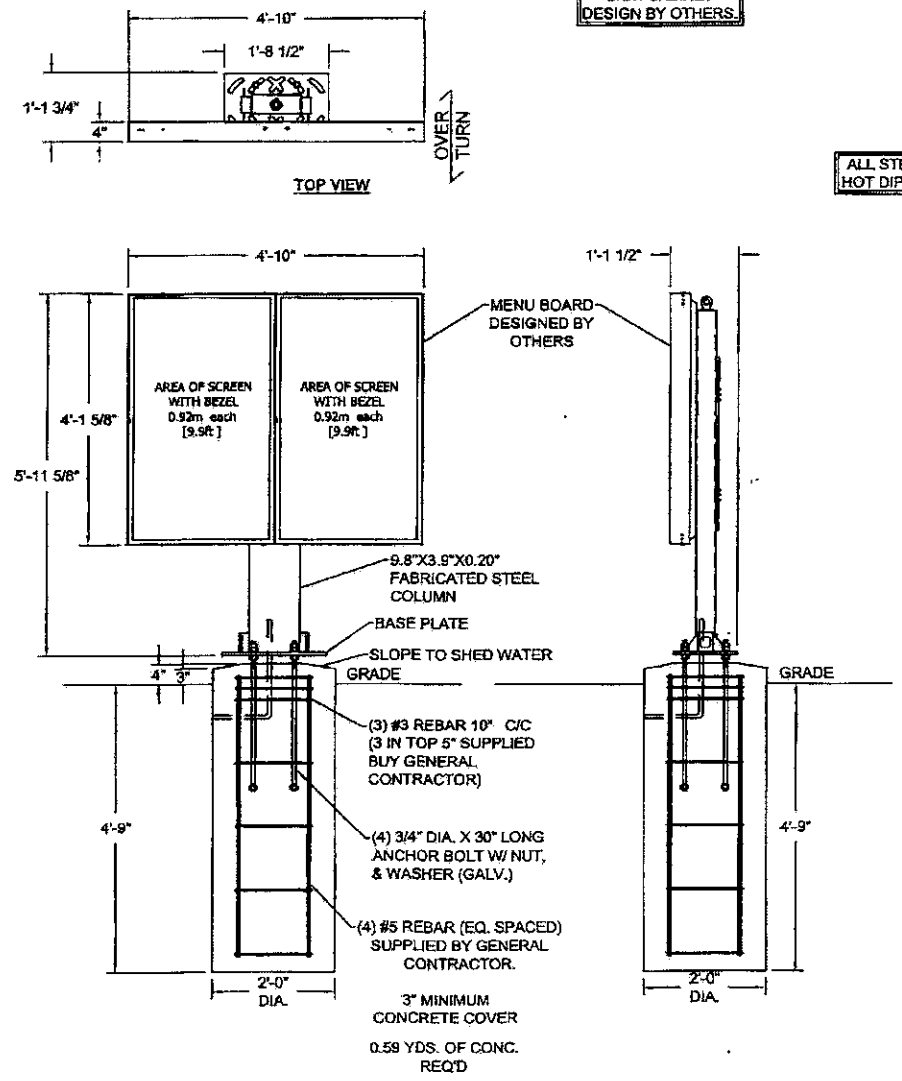

ELECTRICAL/ILLUMINATION DESIGN BY OTHERS.

Notes:

1. This is a prototypical design based on the following design criteria:
   Building Code: IBC 2015
   Wind Speed: 115 MPH, Exposure C
   Category II
2. Foundation analysis assumes soil class 4. The allowable bearing pressure should be verified prior to placement of concrete. In the event that the stated requirements are not met and conditions appear deleterious, cease and secure excavation and immediately contact THE CLIENT.
3. Caisson foundation is based on a presumptive safe lateral soil bearing pressure minimum of 150 psf per foot of depth. Isolated lateral bearing footings subject to short-term lateral loads and not adversely affected by a 1/2" motion at grade are permitted to be designed using twice the tabulated value of the corresponding soil class.
4. Foundation shall not be placed on, or at the top of a slope exceeding 3:1 without evaluation by a competent Professional Engineer. Do not place foundation in fill.
5. Concrete shall be mixed to attain a minimum 28 day compressive strength of 3000 psi.
6. Steel reinforcing bars shall conform to ASTM A615, Grade 60 with deformations, in accordance with ASTM A305. Welding of reinforcement is prohibited.
7. Anchor bolts shall meet ASTM F1554 Grade 36 and shall be galvanized to prevent corrosion.
8. All support members shall be free from defects. Steel tubes shall meet ASTM A500 Grade B with a minimum yield strength of 46000 psi. Steel pipe shall meet ASTM A53 Grade B with a minimum yield strength of 35000 psi. Steel angle, channel, and plate shall meet ASTM A36.
9. Steel welds shall be made with E70XX electrodes by persons qualified in accordance with AWS standards within the past two years.
10. Structural bolts shall meet ASTM A325 and be zinc coated unless noted otherwise. Heavy hex nuts shall meet ASTM A563 and washers shall meet ASTM F436 when used with high strength bolts. All high strength bolts shall be tightened using the Turn-of-Nut method unless noted otherwise.
11. This engineer will not be responsible for safety on the jobsite before, during, or after the installation of this structure. It is the responsibility of the owners, contractors, and installers to ensure that the installation of this structure is completed using methods that fully comply with OSHA regulations.
12. Any deviation from this design or from any part of this drawing without prior written consent of this engineer voids this drawing in its entirety.
13. The design depicted on this drawing is prototypical, and should not be used at a specific site unless deemed suitable for that site by a competent Professional Engineer.

NOTE: All designs depicted on this drawing are the sole property of Campbell Consulting Engineering, LLC developed specifically for this project. Use of these designs for any purpose other than the intended application without written consent of Campbell Consulting Engineering, LLC is prohibited. Disclosure of the information presented herein, without Owner's consent, is a violation or implicated property and will not be tolerated.

GREGORY A. CAMPBELL
REGISTERED ENGINEER
AGRICULTURE
No. 21972
STATE OF TENNESSEE

5-16-18

McDONALD'S DOUBLE FACE MENU BOARD
PROTOTYPICAL 115 MPH-INSTALL

CLIENT:
coates
COATES
1142 W. MADISON STREET, SUITE 304
CHICAGO, IL 60607

CAMPBELL CONSULTING ENGINEERING, LLC
382 HIGH STREET
MARYVILLE, TN 37804
865-980-8881
CCENGINEER.COM

SHEET	BY	PROJECT NO.
1	RDG	17-140-E
OF	DATE	DRAWING NO.
2	5/16/2018	B101019-B

May 16, 2018

PROJECT #	17-0140-E	
DRAWING #	B101019-B	
WIND SPEED	115	MPH
WIND LOAD	20.56	PSF
BUILDING CODE	IBC 2015	

OWNER: McDONALD'S - 2 FACE MENU BOARD
PROTOTYPICAL
115 MPH

CLIENT: COATES
1142 W. MADISON STREET, SUITE 304
CHICAGO, IL 60607

Description	Height (FT)	Width (FT)	Shape Factor	CF Adjust.	Centroid (FT)	Area (SF)	Wind Force (K)	Moment (K-FT)
SIGN	4.333	4.833	1.000	1.000	2.067	19.978	0.411	0.849
COLUMN	5.833	0.817	1.000	1.232	0.917	1.497	0.048	1.636
OVERALL HEIGHT	5.967							

COLUMN CALCULATIONS

T=TUBE; P=PIPE; W=WIDE-FLANGE; O=OTHER

	Description	Column Depth (IN)	Column Width (IN)	Wall Thickness (IN)	Ix (IN^4)	Sxx (IN^3)	Zxx (IN^3)	DESIGN MOMENT (K-FT)	NOMINAL FLEXURAL STRENGTH (K-FT)	UNITY
T	SIGN	3.900	9.800	0.200	14.482	7.427	7.748	0.849	11.683	0.073
T	COLUMN	3.900	9.800	0.200	14.482	7.427	7.748	1.636	11.683	0.140

BOLT CALCULATIONS

Description	MOMENT (K-FT)	BOLT SPACING (IN)	BOLT QTY	BOLT DIAMETER (IN)	BOLT AREA IN^2	BOLT TENSION (K)	BOLT SHEAR (K)	BOLT TENSION CAPACITY (K)	BOLT SHEAR CAPACITY (K)	COMBINED UNITY CHECK
BASE PLATE	1.636	8.000	4	0.750	0.442	1.227	0.212	8.438	5.064	0.145

PLATE CALCULATIONS

Description	TENSION PER BOLT (K)	MOMENT ARM IN	PLATE MOMENT K-IN	PLATE WIDTH IN	PLATE DEPTH IN	PLATE THICK. IN	MINIMUM PLATE THICK. IN
BASE PLATE	1.227	2.000	2.454	3.000	12.000	0.630	0.433

FOUNDATION CALCULATIONS

CAISSON FOUNDATION

MOMENT AT GRADE	1.636	K-FT
SHEAR AT GRADE	0.048	K
REFERENCE IBC 1807.3.2.1 & TABLE 1806.2		
ASSUME SOIL CLASS 4 - SW, SP, SM, SC, GM, & GC		
LATERAL BEARING PRESSURE - PSF/FT OF DEPTH	150.000	PSF/FT
S1	475.000	
DEPTH	4.750	FT
DIAMETER	2.000	FT
h	3.652	FT
A	1.104	
CALCULATED DEPTH	2.739	FT
CONCRETE REQUIRED	0.553	YD^3

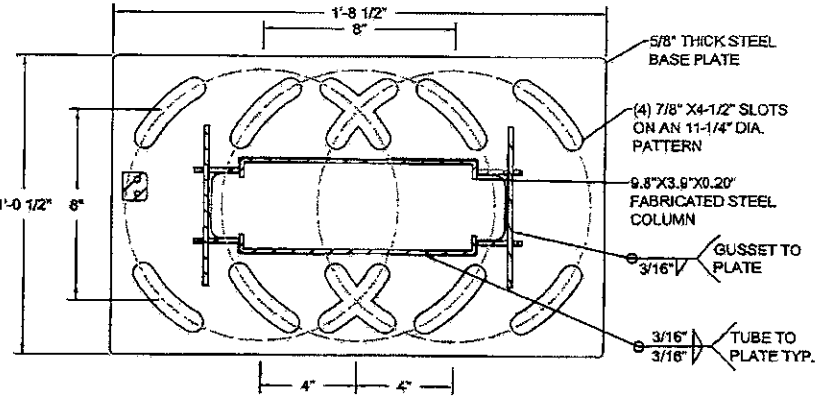

BASE PLATE DETAIL

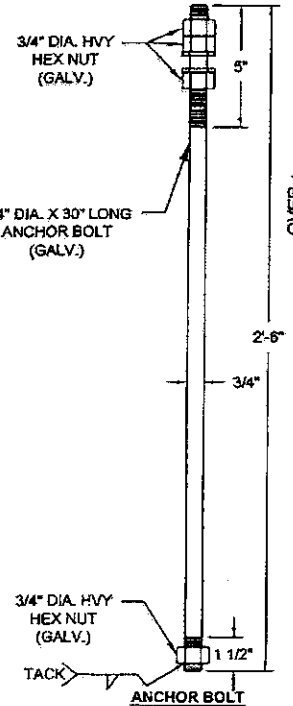

ANCHOR BOLT DETAIL

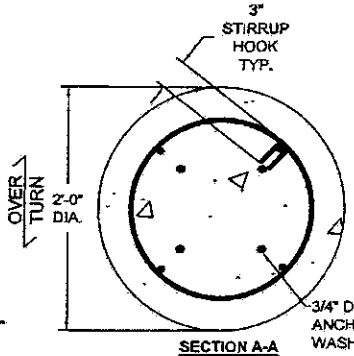

SECTION A-A

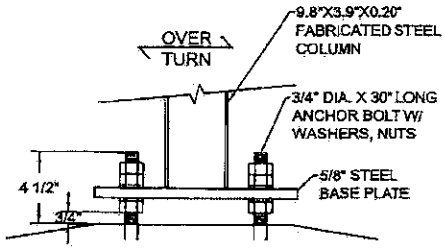

ANCHOR BOLT PROJECTION DETAIL

NOTE: All designs displayed on this drawing are the sole property of Campbell Consulting Engineering, LLC developed specifically for this project. Use of these designs for any purpose other than this intended application without written consent of Campbell Consulting Engineering, LLC is prohibited. Disclosure of the information presented herein, without Owner's consent, is a violation of intellectual property and will not be tolerated.

GREGORY R. CAMPBELL
REGISTERED ENGINEER
AGRICULTURE
No. 21972
STATE OF TENNESSEE

5-16-18

McDONALD'S DOUBLE FACE MENU BOARD
PROTOTYPICAL 115 MPH-INSTALL

CLIENT:
coates
COATES
1142 W. MADISON STREET, SUITE 304
CHICAGO, IL 60607

CAMPBELL CONSULTING ENGINEERING, LLC
382 HIGH STREET
MARYVILLE, TN 37804
865-980-8881
CCENGINEER.COM

SHEET	BY	PROJECT NO.
2	RDG	17-140-E
OF 2	DATE 5/16/2018	DRAWING NO. B101019-B

McDonald's Outdoor Digital Menu Board Installation Day 1 (Site Prep Day)

For the Intended use of any and all crews who will be handling:

- **Hole Excavation and Foundation Pouring**
- **Electrical, Low Voltage and Conduit work**

Each of the above crews should receive a copy of this document.

Document Revision: D

PROPRIETARY INFORMATION

Confidential Document:
Do not copy or distribute without written permission from USSI.
Copyright ©2018. [Unpublished Work]. All rights reserved.

The Electrical and Low Voltage work may not necessarily be performed by the same crew. If different crews are utilized, both must have a set of these instructions and both must work in unison with the other to align the tasks and avoid unnecessary delays in the project.

1 Site Survey

In the weeks prior to the installation, a Site Survey would have been performed to determine if any of the existing conduits, ground boxes or foundations can be reused. The surveys also provided information that will help determine where new foundations will be poured, lengths for new conduit runs, paths for electrical and data cabling, etc.
A copy of the Site Survey should have been received by the contractor prior to dispatch. If the electrical or low voltage professional has not received a copy of the Site Survey from the contractor, please contact them and ask for a copy.

2 USSI Check In

USSI contractors are required to utilize a specific Check In and Check Out procedure for every job performed for USSI. For all jobs assigned to a contractor by USSI, they will be provided a unique Call Ticket Number that begins with the letter "C", followed by 6 digits. The following is a brief overview of the process:

Prompt instructions: To log on/off or talk to an agent
USSI IVR Phone Number: 321-953-5299
Enter call ticket # omitting the "C", then press "*". (Ex: C123456 would be entered 123456*)
Press 1 if correct
Press 2 if not correct
Press 1 to log on
Press 2 to log off
Press 3 to speak to an agent
Enter Mileage in whole numbers only followed by "*" (ex: 22 miles would be entered 22*)
Enter one way drive time in hours and minutes where the first 2 digits are the hours, followed by "*" and the next 2 digits are the minutes
EX: 1.5 hours drive time would be entered by: 01*30

3 Old Foundations

In the unlikely event that original foundations will be reutilized, it MUST already be in an 8" x 8" bolt pattern. This should be determined during the Site Survey and conveyed to the contractor prior to the Installation date.

4 New Foundations

If new foundations are required, each site will require the digging and installation of **up to** 4 foundations; two pre-browse foundations and two digital menu board foundations. Each foundation will be completed to McDonald's specs as outlined Foundation Zip file supplied to the contractor.

****PLEASE REFER TO LOCAL FROST CODES****

The depth and width of the foundation holes is detailed in the drawings. The stated depths of the foundation holes (4'9" for Menu Boards and 3'2" for Pre-Browse Boards) is absolute **MINIMUM**. If local frost codes dictate deeper holes, then those local guidelines are to be followed.

The first 24" of any new holes should be dug by hand. This should prevent damage to any underground utilities below the surface that are unseen from above ground.

Important Notes:

- 5'-9" target from the center of the COD foundation to the center of the new ODMB foundation (min 5'-0" to max 6'-0" is allowed)
- 18" target from face of curb to edge of the menu board. **Absolute minimum** is 15".
- 100% visibility of the **ENTIRE** menu board from the exact point where the customer stops to place their order (order point is 3'-0" perpendicular from center of COD

Confidential Document:
Do not copy or distribute without written permission from USSI.
Copyright ©2018. [Unpublished Work]. All rights reserved.

4.1 Hole Placement / Menu Board

To determine the proper exact placement of the holes, USSI created and provided a template for use during this and all future installations by the contractor. USSI will also have an onsite representative for training which will include a demonstration of how to utilize the template. The following is an example of what the template looks like and how it is utilized. Detailed template assembly and use instructions can be found in Appendix A of this document.

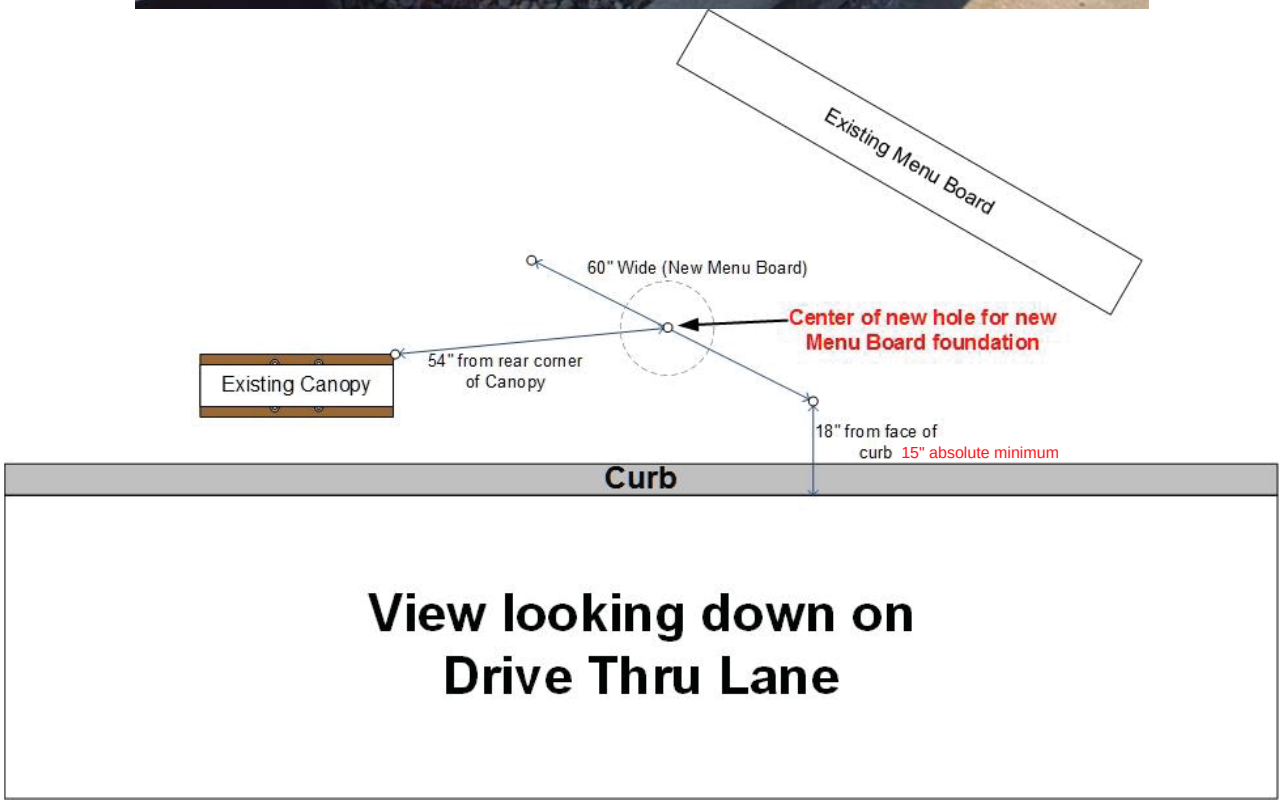

Confidential Document:
Do not copy or distribute without written permission from USSI.
Copyright ©2018. [Unpublished Work]. All rights reserved.

4.2 Hole Placement / Pre-Browse Board

Depending on if the lane is straight or curved between the Canopy and the Pre-Browse location, there are 2 different ways to determine the spot as shown below.

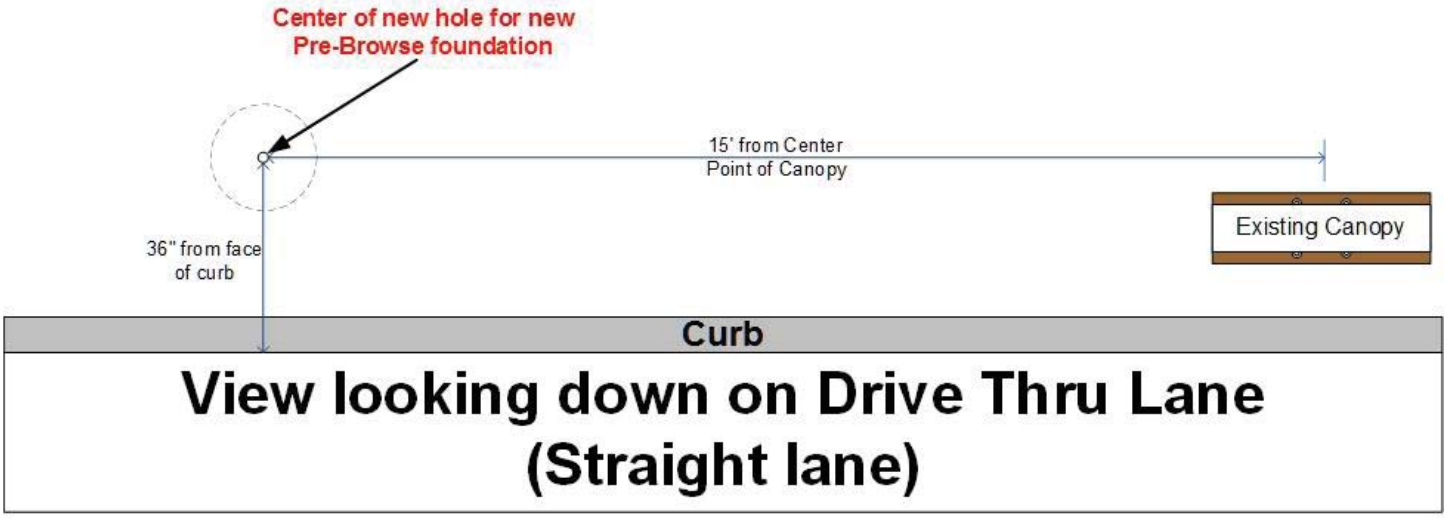

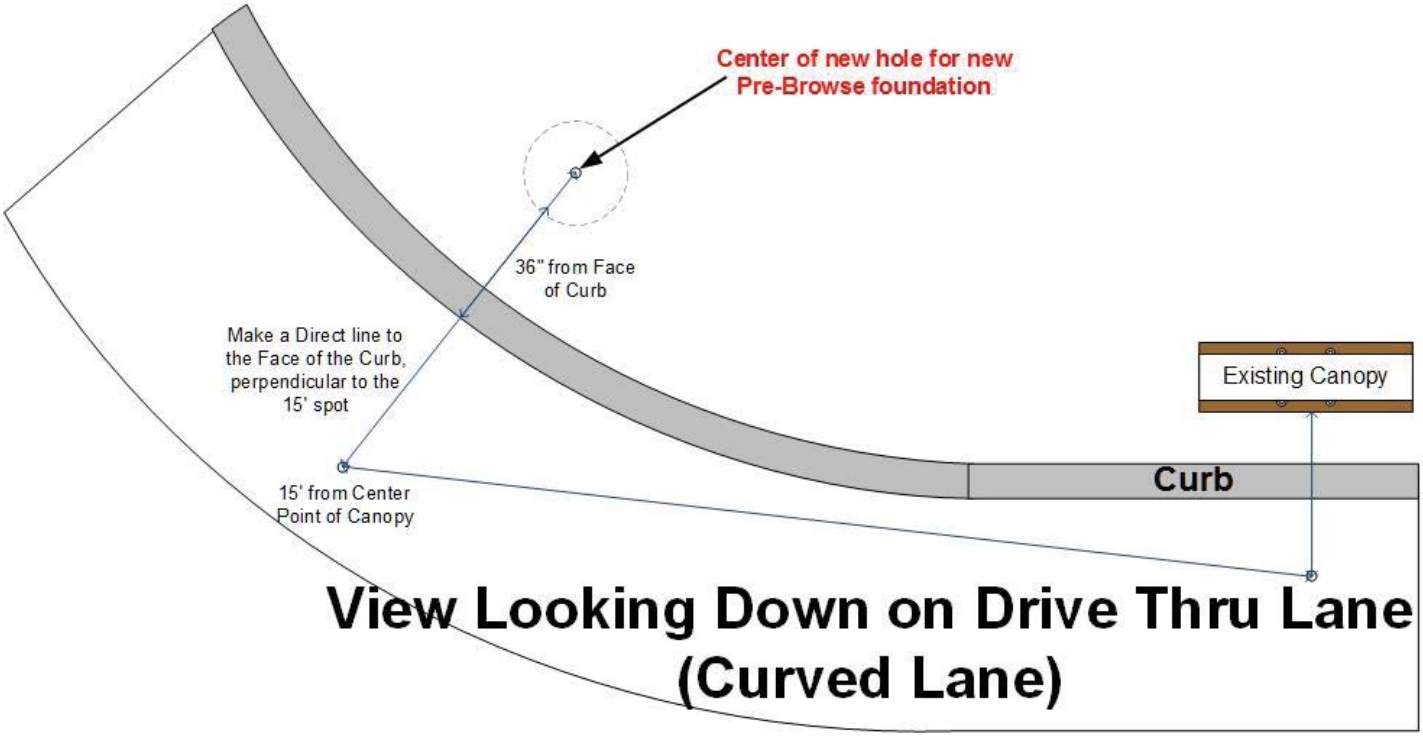

If after finding the exact spot where the new Pre-Browse foundation should go, it turns out there is a bollard, tree or large boulder in that spot that is not easily removable, then place the new foundation directly to the right of the object, closer to the canopy. DO NOT go to the left which would put it further away.

4.3 Spoil

All spoil (dirt removed from the excavation) MUST be removed from the site. It is recommended that care be taken to leave enough to provide backfill after foundations are poured, however all excess must be hauled offsite. All arrangements for spoil disposal are the responsibility of the contractor. No excess spoil will be left onsite.

Confidential Document:
Do not copy or distribute without written permission from USSI.
Copyright ©2018. [Unpublished Work]. All rights reserved.

4.4 Proper Care Before Dig

Before digging any of the holes, proper care must be taken to protect and preserve any existing landscaping including hardscape as well as softscape. Permanent removal of some shrubs, plants, etc. is authorized if it is absolutely necessary to complete the work and must be properly disposed of.

4.5 Rebar Cages

The rebar cages should be prepared in the days **PRIOR** to the Site Prep. They should be preassembled using wire bindings but welding should wait until the day of installation just in case setting them may interfere with existing conduits. Rebar details are provided in the drawings in Appendix B of this document.

4.6 Conduits

Conduit details are provided in the drawings in Appendix B of this document and it should be noted that any new conduits added must be a minimum of 18' below grade. For time savings, it may be necessary for the concrete crew to handle their own conduit preparations for the foundations and stub them out of the Sonotube for the electrician to complete afterward.

4.7 Anchor Bolt Kits

These kits are provided to the contractor ahead of time and must be prepared along with the rebar cages in the days prior to the Site Prep so as not to cause unnecessary delays in the project. Anchor bolt details are provided in the drawings in Appendix B of this document.
ONLY provided anchor bolt kits may be utilized, no substitutions.

5 Electrical / Low Voltage

Since there are both High and Low voltage cabling requirements, it is **IMPERATIVE** that these both be handled by licensed professionals who fully understand the requirements. Therefore, it may be necessary to send different people to handle each of these requirements **IF** the Electrical team does not have the ability to handle the Low Voltage requirements in the proper manner.
A typical electrical team will be one licensed electrician and a helper. Each team will be responsible for all the electrical work onsite as well as **picking up any applicable permits**. The electrician will be reimbursed for all permit fees.
As previously mentioned, the typical or standard electrical configuration will be 2 Menu Boards and 2 Pre-Browse Boards with the following assumptions:

- The first ground boxes will be approximately 20 feet from the building, if installed new.
- There will be two ground boxes in each lane, one for data and one for high voltage electric
- The Menu Board will be no more than 10 feet from the ground box and the Pre-Browse Board will be no more than 15'.
- Each lane will be on its own dedicated 20-amp circuit consisting of 4 wires: Hot, Neutral, Ground and Isolated Ground
- Assumes all trenching will be through normal soils.
- Concrete cuts will be quoted additional as well as the remediation/repair of the cuts
- It is assumed there is already conduits from lane 1 to lane 2. If there is not, we will be responsible to install one which may require a saw cut, directional boring or some other method. This will be an additional charge. Every effort will be made to find a suitable chase way at the site survey.

Electrical requirements will be site specific and will require all the following to be in place **PRIOR** to installing the new Digital Menu Boards on Day 2. These requirements are detailed in the Electrical Zip file supplied to the contractor.
The site will need (1) 120V-20A "always on" circuit **PER LANE** for a total of (2) circuits per site. These will be existing in many locations (in use specifically for the current COD equipment). Although existing Menu Board circuits can be used, they **MUST** be on 24/7, and they **MUST** be connected to the CP Panel (which is IG), not the LP Panel. The majority of these circuits either go through a Photosensor or Timer of some sort to cut power to the boards during the day. These circuits may only be used **IF** the Photosensor or Timer can be bypassed.

****Existing circuits may ONLY be reused IF they are accessed through the Ground boxes and NOT from the tops of the existing foundations. If there is no electrical ground box, or it is not accessible to attach new conduits from them to the new board foundations, then all new circuits must be run****

Confidential Document:
Do not copy or distribute without written permission from USSI.
Copyright ©2018. [Unpublished Work]. All rights reserved.

If no “always on” circuits can be located in either lane, install new conduit (per supplied spec) that will allow the 2 new circuits to get from the CP Panel inside restaurant to main ground box in Lane 1. Refer to the supplied electrical drawings for further details.
ODMB circuits must be clearly labeled inside the electrical panel, “Lane 1 ODMB” and “Lane 2 ODMB”. A picture must be taken of the label and submitted with the deliverables.

5.1 Ground Boxes

Existing Ground Boxes can and should be used when available. Often there will be a Ground Box for Low Voltage and a separate one for 120V, although you may run into some that share large ground boxes. If existing conduit is not useable however the existing Ground Box is large enough to accommodate new conduits, the Ground Box can be reutilized.

5.2 120V Conduits (all ¾” min)

- Lane 1 Ground box to inside of restaurant
- Lane 1 Ground box to Lane 1 Menu board
- Lane 1 Ground box to Lane 1 Pre-Browse
- Lane 1 Ground box to Lane 2 Ground box (under DT Lane 1 concrete)
- Lane 2 Ground box to Lane 2 Menu board
- Lane 2 Ground box to Lane 2 Pre-Browse

5.3 Low Voltage Conduits

- Lane 1 Ground box to inside of restaurant (2”)
- Lane 1 Ground box to Lane 1 Menu board (1.5”)
- Lane 1 Ground box to Lane 1 Pre-Browse (1.5”)
- Lane 1 Ground box to Lane 2 Ground box (under DT Lane 1 concrete) (2”)
- Lane 2 Ground box to Lane 2 Menu board (1.5”)
- Lane 2 Ground box to Lane 2 Pre-Browse (1.5”)

6 New 120V Circuits

Run (1) new 120V-20A IG circuit (per supplied spec) in installed conduit from CP Panel inside restaurant to each of (4) new locations in Drive Thru (2 new 20A circuits total).
Be sure to leave approximately 3’ of wire coming out of the foundation to have enough to connect to the new Boards on the following day.
It is assumed that the existing electrical panels will have sufficient space for new breakers (if required). Be sure all the new circuits are terminated at their new breaker, but do not turn on the breakers.
Outside, put wire nuts over the top of the new wires, and coil up so they do not get damaged when the new boards are set the following day.

7 Low Voltage (Cat6)

Cat6 cable will have been shipped to the site by the vendor prior to the arrival of the installers. There should be 4 boxes, each 500’ in length of black direct burial cable from Belden. This is the only cable that is to be used. If any other cable is used and it is discovered later, the installer will have to return to change the cable at their own expense.

Confidential Document:
Do not copy or distribute without written permission from USSI.
Copyright ©2018. [Unpublished Work]. All rights reserved.

7.1 Running the Cable

Each panel within a board will require 2 cables, 1 of which is simply a spare for later use. That means that each Menu Board, that contains 2 panels, will need 4 cables run to it. Each Pre-Browse board, which contains only 1 panel, will need 2 cables run to it.

Run bare CAT 6 cables from AWS switch inside restaurant to each piece of equipment:

(4) CAT 6 to Lane 1 Menu board
(4) CAT 6 to Lane 2 Menu board
(2) CAT 6 to Lane 1 Pre-Browse (if store has a Lane 1 Pre-Browse)
(2) CAT 6 to Lane 2 Pre-Browse (if store has a Lane 2 Pre-Browse)

The AWS switch is not to be confused with the other network switches in the store. They are typically isolated away from the other network equipment with minor exceptions. The exact location of the AWS switch will be determined at the Site Survey and that location will be found on those results. For reference, the following are some pictures of some AWS switches.

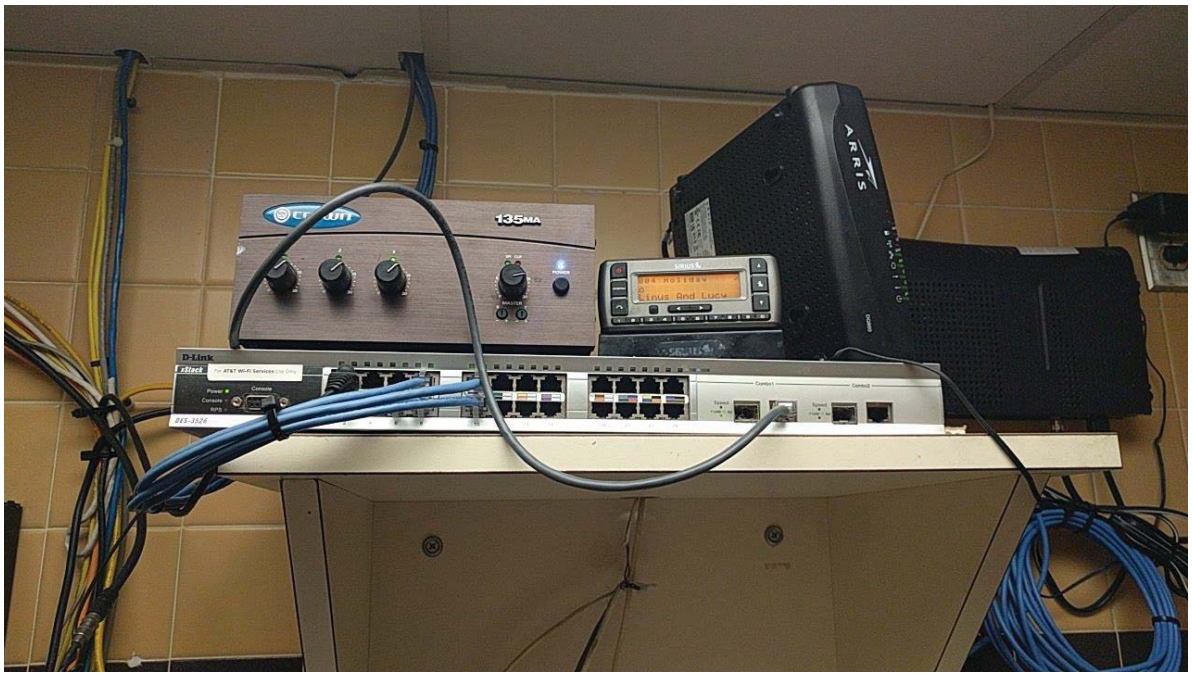

Confidential Document:
Do not copy or distribute without written permission from USSI.
Copyright ©2018. [Unpublished Work]. All rights reserved.

7.1.1 Numbering the Cables

Use either a label maker or just write on the cable with a silver sharpie. When running the cables, be sure to number them on both ends so each cable inside has a known and designated end outside. The proper way to label the cables is based on the Panel numbers according to their assignments by McDonalds. The table to the right should be used to label each cable based on its location.

Cable / Panel Location	Cable Label
Pre-Browse in Lane 1 (Primary)	11 P
Pre-Browse in Lane 1 (Spare)	11 S
Menu Board in Lane 1 (Left Panel – Primary)	12 P
Menu Board in Lane 1 (Left Panel – Spare)	12 S
Menu Board in Lane 1 (Right Panel – Primary)	13 P
Menu Board in Lane 1 (Right Panel – Spare)	13 S
Pre-Browse in Lane 2 (Primary)	14 P
Pre-Browse in Lane 2 (Spare)	14 S
Menu Board in Lane 2 (Left Panel – Primary)	15 P
Menu Board in Lane 2 (Left Panel – Spare)	15 S
Menu Board in Lane 2 (Right Panel – Primary)	16 P
Menu Board in Lane 2 (Right Panel – Spare)	16 S

Some store may not have ALL the boards. For instance, one store may not have a Pre-Browse board in Lane 2. If this happens, just skip the number normally assigned to that board. DO NOT change the numbering of the other boards to compensate. If a store does not have a Pre-Browse board in Lane 2, then the cables will be 11 P&S, 12 P&S, 13 P&S, 15 P&S, 16 P&S. Notice 14 was skipped because there is no board to match that assignment.

7.1.2 Service Loops

It cannot be stressed enough how important service loops are in the running of the cable. Approximately 2' of service loop will need to be present inside the base of each menu board. There should be approximately 10' of service loop inside the store in the ceiling area above the AWS switch. Once all the cable runs are complete, both ends of ALL cables need to be terminated.

7.1.3 Terminations of Cat6 Cables

McDonald's has issued a requirement to utilize very specific RJ45 Jacks from Belden called REVConnect STP. These jacks require a specific tool as well to properly terminate. The tool and the connectors will be supplied by the vendor with the shipment. The back of the tool packaging will detail the instructions on how to use the tool to properly secure these connectors. ANY other type of RJ45 Jack is **NOT** permitted and the Contractor will be required to return to the site at their costs to correct them if improper jacks are used.

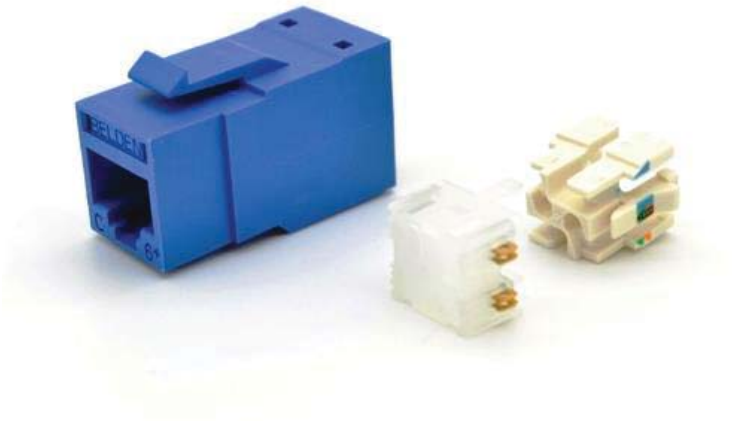

REVConnect STP Jack

REVConnect Tool

Confidential Document:
Do not copy or distribute without written permission from USSI.
Copyright ©2018. [Unpublished Work]. All rights reserved.

Below are the instructions for the REVConnect termination and tool. These should be supplied separately by the vendor and can also be found on the back of the packaging that contains the tool.

Confidential Document:
Do not copy or distribute without written permission from USSI.
Copyright ©2018. [Unpublished Work]. All rights reserved.

7.1.4 Testing Cables

After all terminations are complete, it is the responsibility of the installer to test each terminated cable for proper continuity. There are many variations of Cat 5/6 cable testers (see example to the right) but each cable must be tested. This will ensure that once connected to the boards, there will be no issues that will take longer to find. If any cable fails the test, one or both ends may need to be re-terminated to correct the problem.

7.2 Completing Cable Runs

After each cable has been run, labeled, and tested, the ends must be properly protected. Do not plug the cables into the AWS switch inside the store yet. This should only be done after the boards are installed on the following day. Outside, coil up the cables in a way where they can easily be brought up through the bottom of each board when it is placed the following day. Inside, coil up all the wires, tape them together, and place the coil on top of the AWS Switch for connection on the following day. Ends of **ALL** 12 cables (inside and outside) must be terminated prior to leaving site.

8 Clean-up

After all the above work is completed, the site must be properly cleaned of all removed landscape debris, spoil, and trash. Proper clean-up is essential in ensuring a satisfied customer and satisfactory installation experience for all.

9 Check Out

Be sure to call back into the USSI IVR system to check out of the site prior to leaving.

10 Exceptions

Any deviation or variance from the written instructions will require approval from USSI Global prior to completing the work.

11 Document Revisions

Date	Description	Version	Author
4.26.18	Initial Draft	A	K. Mather
5.18.18	Revised section 4.0 and 4.6 adding hand dig and conduit depth	B	K. Mather
5.29.18	Added Appendix A & B	C	K. Mather
9.24.18	Revised section 4, 4.7, section 5 and section 7.2, added section 10	D	K. Mather
11.2.18	Updated minimum distance from curb face to edge of menu board to 15"	E	J. Hunt

Confidential Document:
Do not copy or distribute without written permission from USSI.
Copyright ©2018. [Unpublished Work]. All rights reserved.

Confidential Document:
Do not copy or distribute without written permission from USSI.
Copyright ©2018. [Unpublished Work]. All rights reserved.

Appendix A

Digital Menu Board Placement Template

This section will include detailed drawings that relate to the work outlined in this document.

The purpose of this template is to determine the proper placement for the hole where the Digital Menu Board will be placed. This is NOT used for the Pre-Browse board.

These template kits are available from USSI. All of the parts are available at the local hardware store to build your own. The parts list consists of:

(All 1 ¼ SCH 40 PVC)
1 – 72” long piece with bell end still attached
1 – 60” long piece
1 – 24” piece
1 – 20” piece
2 – ¼” by 4” Door hinge pins with clip OR bolts with locking nuts.
1 – 90 degree PVC Elbow

The only tools you will need will be a drill with a ¼” drill bit.

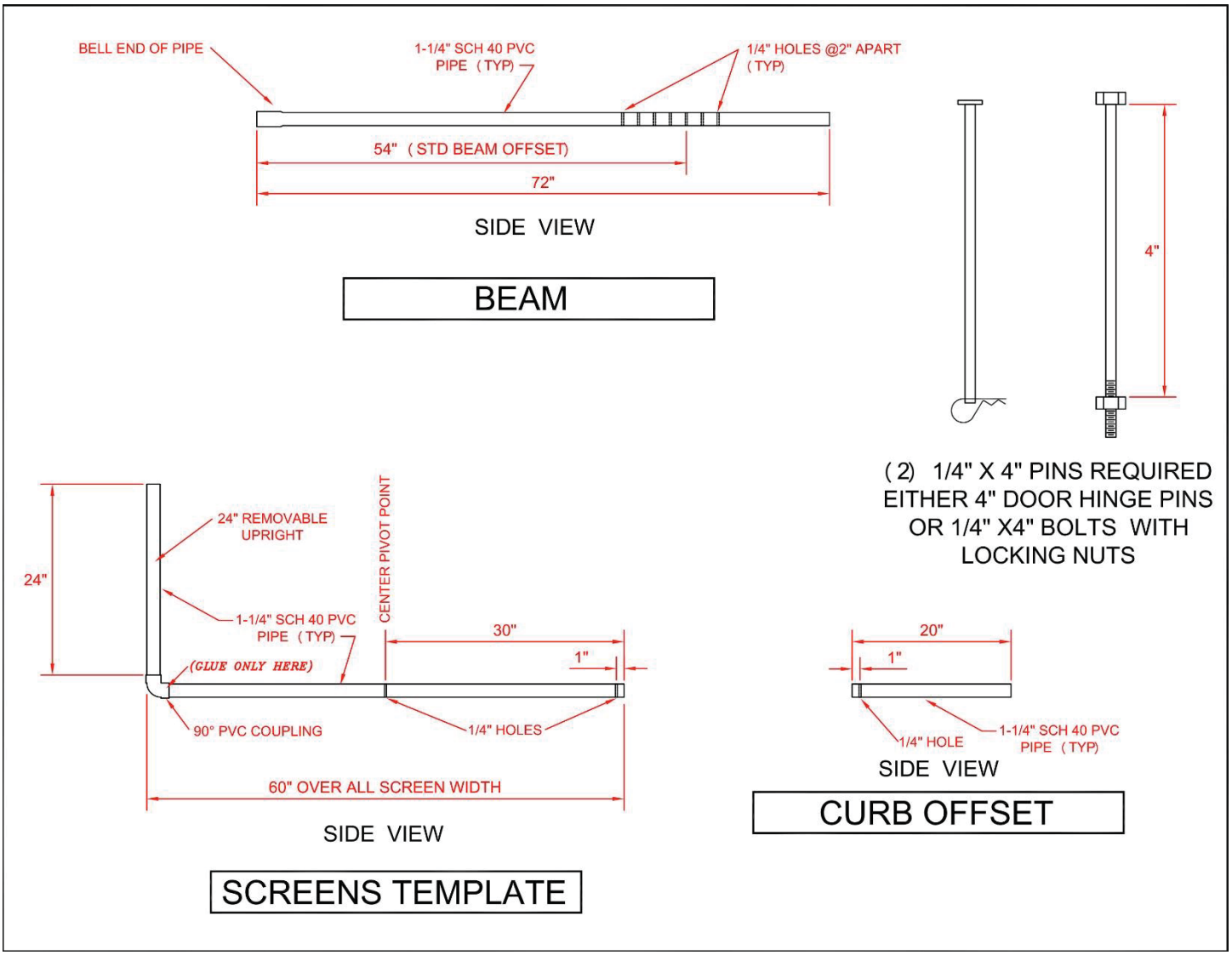

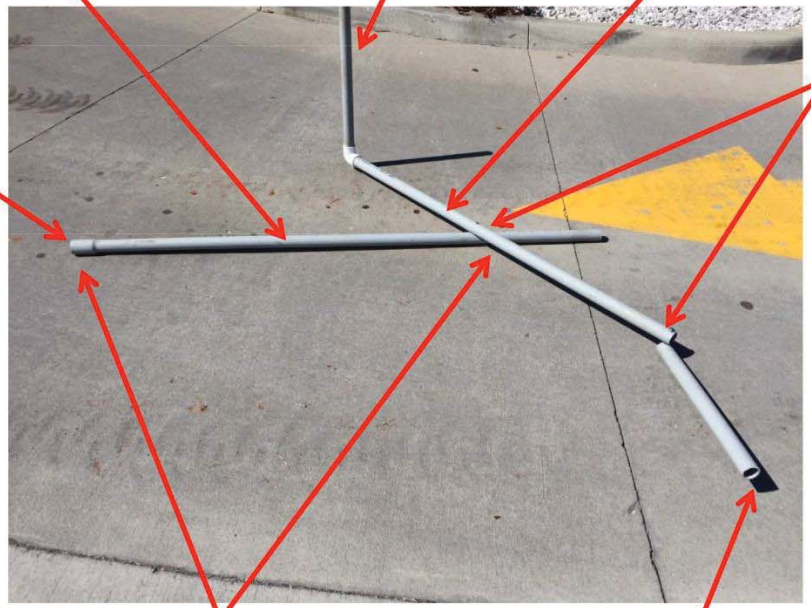

JIG ASSEMBLY INSTRUCTIONS

BEAM AND SCREENS TEMPLATE INTERSECTION MARKS THE CENTER OF THE CONC FOUNDATION

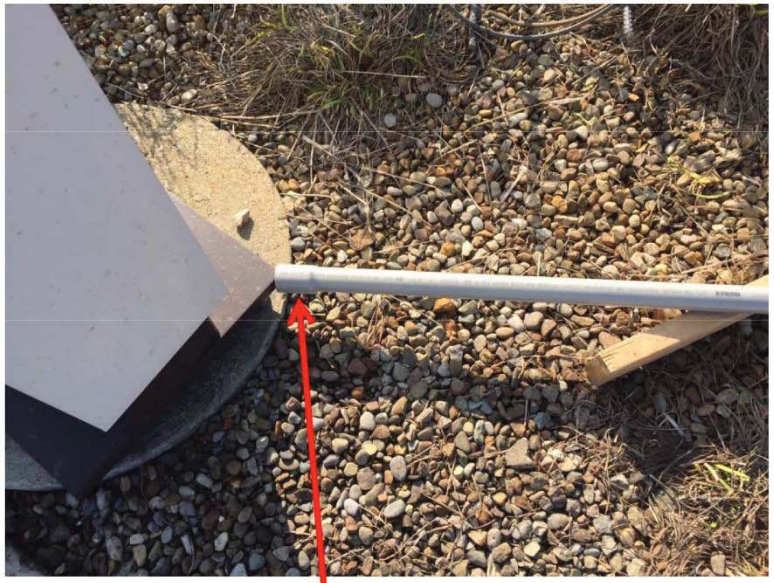

PLACE BELL END OF BEAM AGAINST RIGHT REAR CORNER OF COD STEEL BASE PLATE

BE SURE YOU CAN SEE UPRIGHT FROM DRIVERS VIEW WHILE PLACING ORDER AT THE COD

PLACE EDGE OF CURB OFFSET TO FACE OF CURB

PRE FOUNDATION EXCAVATION USE

USING JIG TO CONFIRM CENTER OF EXCAVATED FOUNDATION HOLE

USING JIG TO PROPERLY CENTER AND ALIGN ANCHOR BOLTS

AFTER FOUNDATION EXCAVATION USE

Appendix B

Digital Menu Board Detailed Drawings

This section will include detailed drawings that relate to the work outlined in this document.

SIGN CABINET DESIGN BY OTHERS.

ELECTRICAL/ILLUMINATION DESIGN BY OTHERS.

ALL STEEL SHALL BE HOT DIP GALVANIZED.

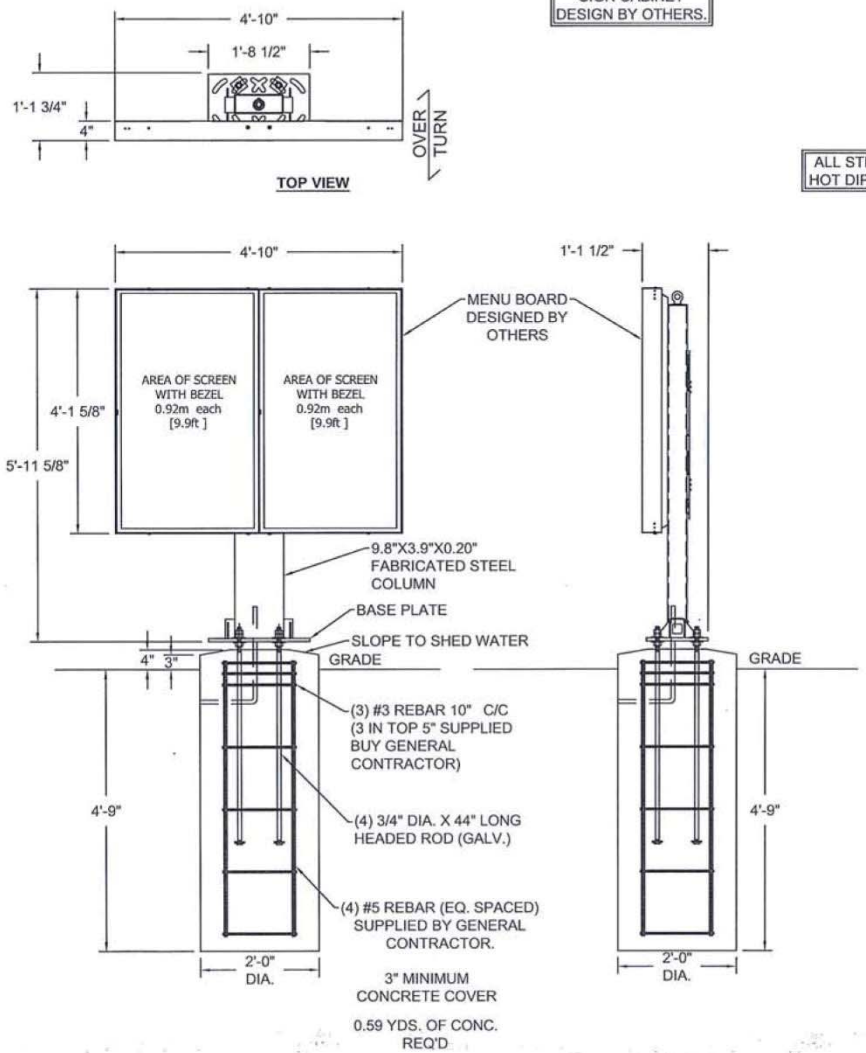

Notes:

1. This is a prototypical design based on the following design criteria:
   Building Code: IBC 2012
   Wind Speed: 115 MPH, Exposure C
   Category II
2. Foundation analysis assumes soil class 4. The allowable bearing pressure should be verified prior to placement of concrete. In the event that the stated requirements are not met and conditions appear deleterious, cease and secure excavation and immediately contact THE CLIENT.
3. Caisson foundation is based on a presumptive safe lateral soil bearing pressure minimum of 150 psf per foot of depth. Isolated lateral bearing footings subject to short-term lateral loads and not adversely affected by a 1/2" motion at grade are permitted to be designed using twice the tabulated value of the corresponding soil class.
4. Foundation shall not be placed on, or at the top of a slope exceeding 3:1 without evaluation by a competent Professional Engineer. Do not place foundation in fill.
5. Concrete shall be mixed to attain a minimum 28 day compressive strength of 3000 psi.
6. Steel reinforcing bars shall conform to ASTM A615, Grade 60 with deformations, in accordance with ASTM A305. Welding of reinforcement is prohibited.
7. Anchor bolts shall meet ASTM F1554 Grade 36 and shall be galvanized to prevent corrosion.
8. All support members shall be free from defects. Steel tubes shall meet ASTM A500 Grade B with a minimum yield strength of 46000 psi. Steel pipe shall meet ASTM A53 Grade B with a minimum yield strength of 35000 psi. Steel angle, channel, and plate shall meet ASTM A36.
9. Steel welds shall be made with E70XX electrodes by persons qualified in accordance with AWS standards within the past two years.
10. Structural bolts shall meet ASTM A325 and be zinc coated unless noted otherwise. Heavy hex nuts shall meet ASTM A563 and washers shall meet ASTM F436 when used with high strength bolts. All high strength bolts shall be tightened using the Turn-of-Nut method unless noted otherwise.
11. This engineer will not be responsible for safety on the jobsite before, during, or after the installation of this structure. It is the responsibility of the owners, contractors, and installers to ensure that the installation of this structure is completed using methods that fully comply with OSHA regulations.
12. Any deviation from this design or from any part of this drawing without prior written consent of this engineer voids this drawing in its entirety.
13. The design depicted on this drawing is prototypical, and should not be used at a specific site unless deemed suitable for that site by a competent Professional Engineer.

NOTE: All designs depicted on this drawing are the sole property of Campbell Consulting Engineering, LLC developed specifically for this project. Use of these designs for any purpose other than the intended application without written consent of Campbell Consulting Engineering, LLC is prohibited. Disclosure of the information presented herein, without Owner's consent, is a violation of intellectual property and will not be tolerated.

GREGORY A. CAMPBELL
REGISTERED ENGINEER
AGRICULTURE
COMMERCE
No. 21912
STATE OF TENNESSEE

11-2-17

McDONALD'S DOUBLE FACE MENU BOARD
PROTOTYPICAL 115 MPH-INSTALL

CLIENT:
coates
COATES
1142 W. MADISON STREET, SUITE 304
CHICAGO, IL 60607

CAMPBELL CONSULTING ENGINEERING, LLC
382 HIGH STREET
MARYVILLE, TN 37804
865-980-8881
CCENGINEER.COM

SHEET	BY	PROJECT NO.
1	RDG	17-140-D
OF 2	DATE 11/2/2017	DRAWING NO. B101019-B

September 22, 2017

PROJECT #	17-0140B	
DRAWING #	B101019	
WIND SPEED	115	MPH
WIND LOAD	20.56	PSF
BUILDING CODE	IBC 2012	

OWNER: McDONALD'S - 2 FACE MENUBOARD PROTOTYPICAL 115 MPH

CLIENT: COATES
1142 W. MADISON STREET, SUITE 304
CHICAGO, IL 60607

Description	Height (FT)	Width (FT)	Shape Factor	Cf Adjust.	Centroid (FT)	Area (SF)	Wind Force (K)	Moment (K-FT)
SIGN	4.133	4.833	1.000	1.000	2.067	19.978	0.411	0.849
COLUMN	1.833	0.817	1.000	1.212	0.917	1.497	0.448	1.636
OVERALL HEIGHT	5.967							

COLUMN CALCULATIONS

T = TUBE; P = PIPE; W = WIDE-FLANGE; O = OTHER

	Description	Column Depth (IN)	Column Width (IN)	Wall Thickness (IN)	Ixx (IN^4)	Sxx (IN^3)	Zxx (IN^3)	DESIGN MOMENT (K-FT)	NOMINAL FLEXURAL STRENGTH (K-FT)	UNITY
T	SIGN	3.900	9.800	0.200	14.482	7.427	7.748	0.849	11.693	0.073
T	COLUMN	3.900	9.800	0.200	14.482	7.427	7.748	1.636	11.693	0.140

BOLT CALCULATIONS

Description	MOMENT (K-FT)	BOLT SPACING (IN)	BOLT QTY	BOLT DIAMETER (IN)	BOLT AREA IN^2	BOLT TENSION (K)	BOLT SHEAR (K)	BOLT TENSION CAPACITY (K)	BOLT SHEAR CAPACITY (K)	COMBINED UNITY CHECK
BASE PLATE	1.636	8.000	4	0.750	0.442	1.227	0.112	8.438	5.964	0.145

PLATE CALCULATIONS

Description	TENSION PER BOLT (K)	MOMENT ARM IN	PLATE MOMENT K-IN	PLATE WIDTH IN	PLATE DEPTH IN	PLATE THICK. IN	MINIMUM PLATE THICK. IN
BASE PLATE	1.227	2.000	2.454	3.000	12.600	0.630	0.439

FOUNDATION CALCULATIONS

CAISSON FOUNDATION

MOMENT AT GRADE	1.636	K-FT
SHEAR AT GRADE	0.448	K
REFERENCE IBC 1807.3.2 & TABLE 1806.2		
ASSUME SOIL CLASS #4 - SW, SP, SM, SC, GM, & GC		
LATERAL BEARING PRESSURE - PSF/FT OF DEPTH	150.000	PSF/FT
S1	475.000	
DEPTH	4.750	FT
DIAMETER	2.000	FT
h	3.652	FT
A	1.104	
CALCULATED DEPTH	2.719	FT
CONCRETE REQUIRED	0.553	YD^3

ALL STEEL SHALL BE HOT DIP GALVANIZED.

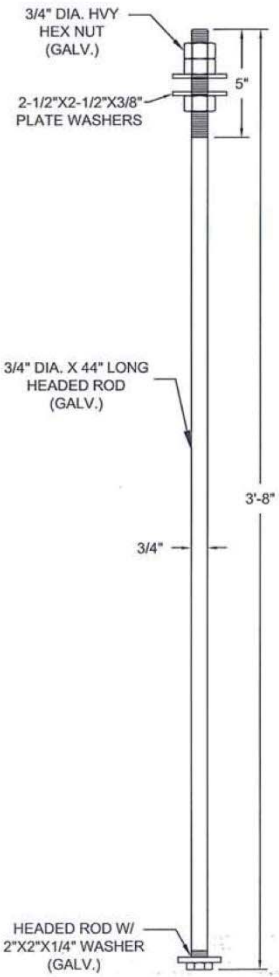

ANCHOR BOLT DETAIL

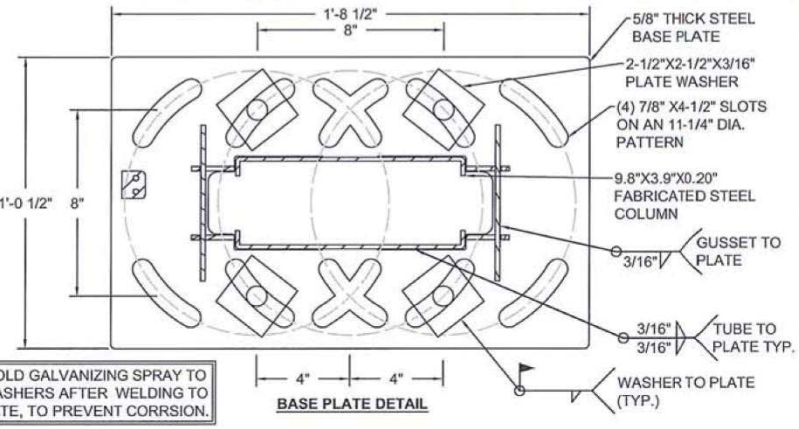

BASE PLATE DETAIL

APPLY COLD GALVANIZING SPRAY TO PLATE WASHERS AFTER WELDING TO BASE PLATE, TO PREVENT CORRSION.

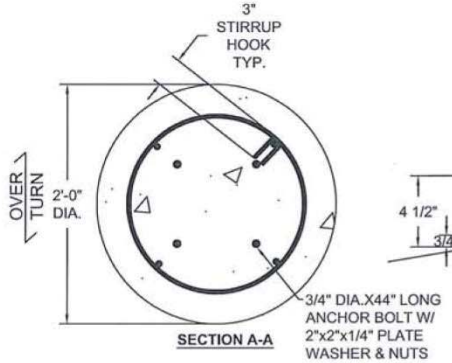

SECTION A-A

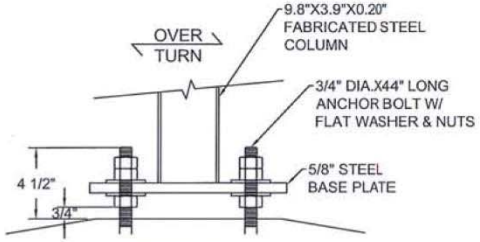

ANCHOR BOLT PROJECTION DETAIL

NOTE: All designs depicted on this drawing are the sole property of Campbell Consulting Engineering, LLC developed specifically for this project. Use of these designs for any purpose other than the intended application without written consent of Campbell Consulting Engineering, LLC is prohibited. Disclosure of the information presented herein, without Owner's consent, is a violation of intellectual property and will not be tolerated.

GREGORY D. CAMPBELL REGISTERED PROFESSIONAL ENGINEER AGRICULTURE COMMERCE No. 21972 STATE OF TENNESSEE

11-2-17

McDONALD'S DOUBLE FACE MENU BOARD
PROTOTYPICAL 115 MPH-INSTALL

CLIENT:
coates
COATES
1142 W. MADISON STREET, SUITE 304
CHICAGO, IL 60607

CAMPBELL CONSULTING ENGINEERING, LLC
382 HIGH STREET
MARYVILLE, TN 37804
865-980-8881
CCENGINEER.COM

SHEET	BY	PROJECT NO.
2	RDG	17-140-D
OF 2	DATE 11/2/2017	DRAWING NO. B101019-B

SIGN CABINET DESIGN BY OTHERS.

ELECTRICAL/ILLUMINATION DESIGN BY OTHERS.

ALL STEEL SHALL BE HOT DIP GALVANIZED.

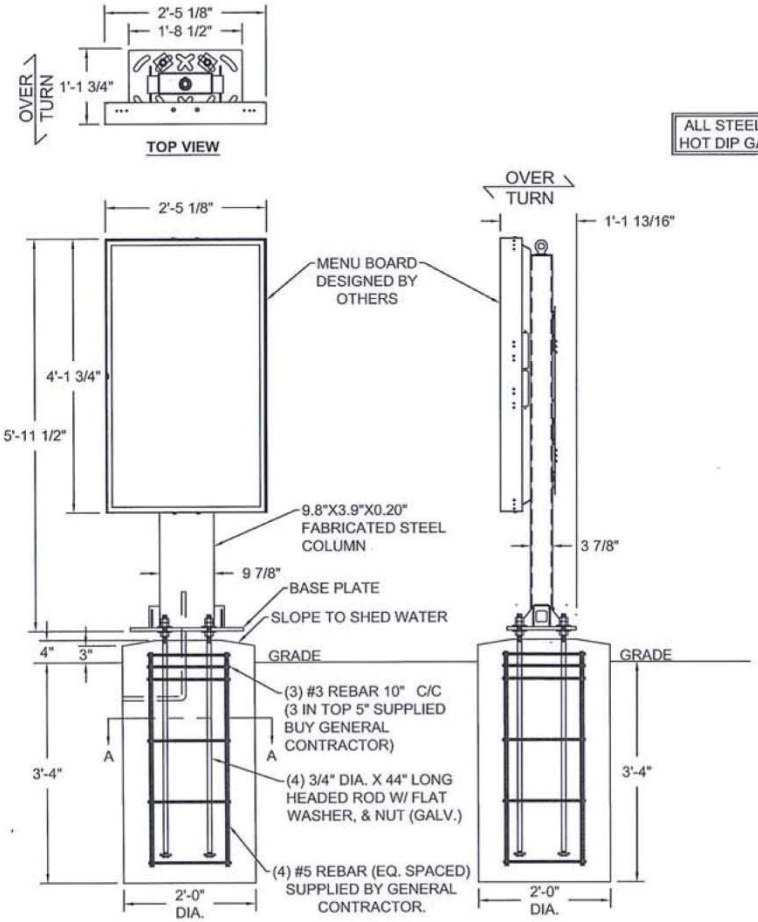

Notes:

1. This is a prototypical design based on the following design criteria:
   Building Code: IBC 2012
   Wind Speed: 115 MPH, Exposure C
   Category II
2. Foundation analysis assumes soil class 4. The allowable bearing pressure should be verified prior to placement of concrete. In the event that the stated requirements are not met and conditions appear deleterious, cease and secure excavation and immediately contact THE CLIENT.
3. Caisson foundation is based on a presumptive safe lateral soil bearing pressure minimum of 150 psf per foot of depth. Isolated lateral bearing footings subject to short-term lateral loads and not adversely affected by a 1/2" motion at grade are permitted to be designed using twice the tabulated value of the corresponding soil class.
4. Foundation shall not be placed on, or at the top of a slope exceeding 3:1 without evaluation by a competent Professional Engineer. Do not place foundation in fill.
5. Concrete shall be mixed to attain a minimum 28 day compressive strength of 3000 psi.
6. Steel reinforcing bars shall conform to ASTM A615, Grade 60 with deformations, in accordance with ASTM A305. Welding of reinforcement is prohibited.
7. Anchor bolts shall meet ASTM F1554 Grade 36 and shall be galvanized to prevent corrosion.
8. All support members shall be free from defects. Steel tubes shall meet ASTM A500 Grade B with a minimum yield strength of 46000 psi. Steel pipe shall meet ASTM A53 Grade B with a minimum yield strength of 35000 psi. Steel angle, channel, and plate shall meet ASTM A36.
9. Steel welds shall be made with E70XX electrodes by persons qualified in accordance with AWS standards within the past two years.
10. Structural bolts shall meet ASTM A325 and be zinc coated unless noted otherwise. Heavy hex nuts shall meet ASTM A563 and washers shall meet ASTM F436 when used with high strength bolts. All high strength bolts shall be tightened using the Turn-of-Nut method unless noted otherwise.
11. This engineer will not be responsible for safety on the jobsite before, during, or after the installation of this structure. It is the responsibility of the owners, contractors, and installers to ensure that the installation of this structure is completed using methods that fully comply with OSHA regulations.
12. Any deviation from this design or from any part of this drawing without prior written consent of this engineer voids this drawing in its entirety.
13. The design depicted on this drawing is prototypical, and should not be used at a specific site unless deemed suitable for that site by a competent Professional Engineer.

NOTE: All designs depicted on this drawing are the sole property of Campbell Consulting Engineering, LLC developed specifically for this project. Use of these designs for any purpose other than the intended application without written consent of Campbell Consulting Engineering, LLC is prohibited. Disclosure of the information presented herein, without Owner's consent, is a violation of intellectual property and will not be tolerated.

GREGORY A. CAMPBELL REGISTERED ENGINEER AGRICULTURE COMMERCE No. 21972 STATE OF TENNESSEE

11-2-17

McDONALD'S SINGLE FACE MENU BOARD
PROTOTYPICAL 115 MPH-INSTALL

CLIENT:
coates
COATES
1142 W. MADISON STREET, SUITE 304
CHICAGO, IL 60607

CAMPBELL CONSULTING ENGINEERING, LLC
382 HIGH STREET
MARYVILLE, TN 37804
865-980-8881
CCENGINEER.COM

SHEET	BY	PROJECT NO.
1	RDG	17-0140-D
OF 2	DATE 11/2/2017	DRAWING NO. B102020-B

November 2, 2017

PROJECT #	17-0140D	
DRAWING #	B101020B	
WIND SPEED	115	MPH
WIND LOAD	21.06	PSF
BUILDING CODE	IBC 2012	

OWNER: McDONALD'S - 1 FACE MENUBOARD
PROTOTYPICAL
115 MPH

CLIENT: COATES
1142 W. MADISON STREET, SUITE 304
CHICAGO, IL 60607

Description	Height (FT)	Width (FT)	Shape Factor	Cf Adjust.	Centroid (FT)	Area (SF)	Wind Force (K)	Moment (K-FT)
SIGN	4.133	2.398	1.000	1.000	2.067	9.913	0.209	0.431
COLUMN	1.833	0.492	1.000	1.212	0.917	0.901	0.232	0.835
OVERALL HEIGHT	5.967							

COLUMN CALCULATIONS

T = TUBE; P = PIPE; W = WIDE-FLANGE; O = OTHER

	Description	Column Depth (IN)	Column Width (IN)	Wall Thickness (IN)	Ixx (IN^4)	Sxx (IN^3)	Zxx (IN^3)	DESIGN MOMENT (K-FT)	NOMINAL FLEXURAL STRENGTH (K-FT)	UNITY
T	SIGN	3.900	9.800	0.200	14.482	7.427	7.748	0.431	**11.694**	0.037
T	COLUMN	3.900	9.800	0.200	14.482	7.427	7.748	0.835	**11.694**	0.072

BOLT CALCULATIONS

Description	MOMENT (K-FT)	BOLT SPACING (IN)	BOLT QTY	BOLT DIAMETER (IN)	BOLT AREA IN^2	BOLT TENSION (K)	BOLT SHEAR (K)	BOLT TENSION CAPACITY (K)	BOLT SHEAR CAPACITY (K)	COMBINED UNITY CHECK
BASE PLATE	0.835	8.000	4	0.750	0.442	0.626	0.058	8.438	5.964	0.074

PLATE CALCULATIONS

Description	TENSION PER BOLT (K)	MOMENT ARM IN	PLATE MOMENT K-IN	PLATE WIDTH IN	PLATE DEPTH IN	PLATE THICK. IN	MINIMUM PLATE THICK. IN
BASE PLATE	0.626	2.000	**1.253**	3.000	12.600	0.630	**0.313**

FOUNDATION CALCULATIONS

CAISSON FOUNDATION

MOMENT AT GRADE	0.835	K-FT
SHEAR AT GRADE	0.232	K
REFERENCE IBC 1807.3.2 & TABLE 1806.2		
ASSUME SOIL CLASS #4 - SW, SP, SM, SC, GM, & GC		
LATERAL BEARING PRESSURE - PSF/FT OF DEPTH	150.000	PSF/FT
S1	333.300	
DEPTH	3.333	FT
DIAMETER	2.000	FT
h	3.604	FT
A	0.814	
CALCULATED DEPTH	2.240	FT
CONCRETE REQUIRED	0.388	YD^3

ALL STEEL SHALL BE HOT DIP GALVANIZED.

APPLY COLD GALVANIZING SPRAY TO WELDS ON PLATE WASHERS AFTER WELDING TO BASE PLATE, TO PREVENT CORROSION.

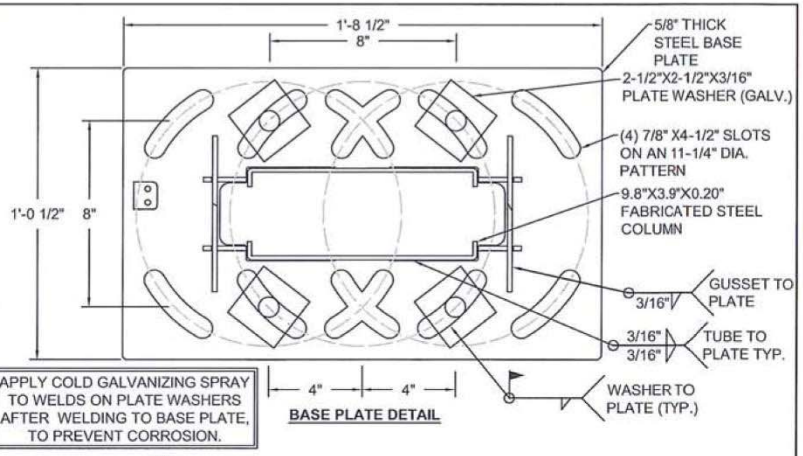

BASE PLATE DETAIL

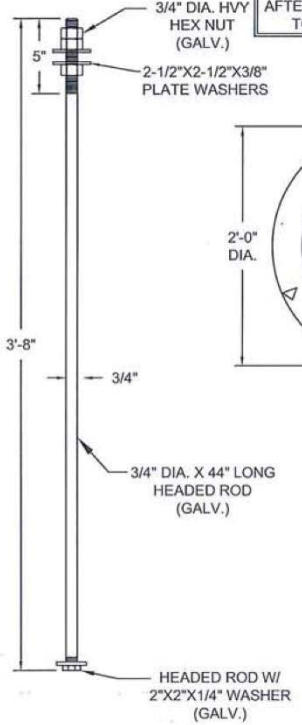

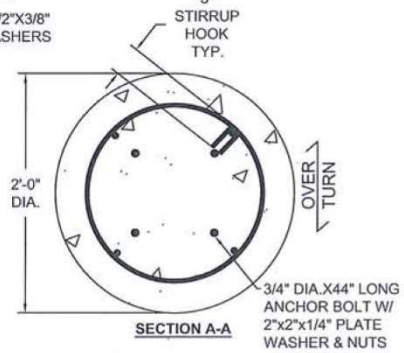

SECTION A-A

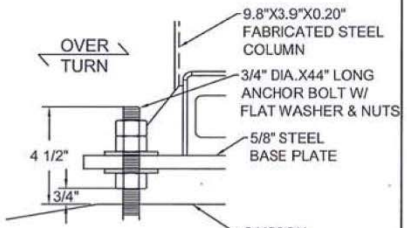

ANCHOR BOLT PROJECTION DETAIL

NOTE: All designs depicted on this drawing are the sole property of Campbell Consulting Engineering, LLC developed specifically for this project. Use of these designs for any purpose other than the intended application without written consent of Campbell Consulting Engineering, LLC is prohibited. Disclosure of the information presented herein, without Owner's consent, is a violation of intellectual property and will not be tolerated.

GREGORY A. CAMPBELL REGISTERED PROFESSIONAL ENGINEER AGRICULTURE COMMERCE No. 21977 STATE OF TENNESSEE

11-2-17

McDONALD'S SINGLE FACE MENU BOARD
PROTOTYPICAL 115 MPH-INSTALL

CLIENT:
coates
COATES
1142 W. MADISON STREET, SUITE 304
CHICAGO, IL 60607

CAMPBELL CONSULTING ENGINEERING, LLC
382 HIGH STREET
MARYVILLE, TN 37804
865-980-8881
CCENGINEER.COM

SHEET	BY	PROJECT NO.
2	RDG	17-0140-D
OF 2	DATE 11/2/2017	DRAWING NO. B102020-B