DRAFT

STATE PROJECT NUMBER
5849-02-02

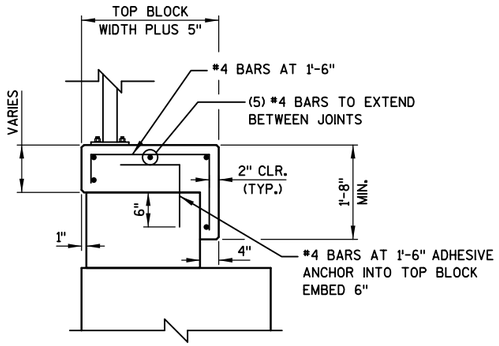

CAST IN PLACE CONCRETE COPING DETAIL

NOTE:
BAR STEEL REINFORCEMENT AND CAST IN PLACE CONCRETE TO BE INCLUDED IN BID ITEM "WALL MODULAR BLOCK GRAVITY R-13-330"

DO NOT RUN BAR STEEL THRU EXPANSION OR CONTRACTION JOINT.

MATERIAL PROPERTIES:
CONCRETE MASONARY _____ fc'= 3,500 psi

HIGH STRENGTH BAR STEEL
REINFORCEMENT, GRADE 60 _____ fy = 60,000 psi

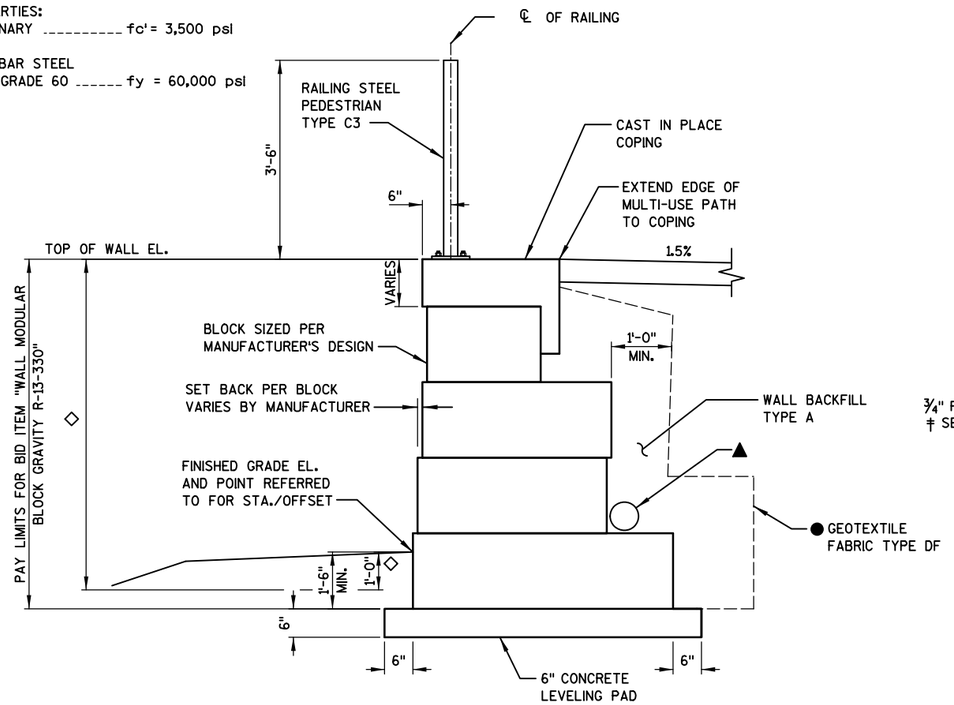

WALL MODULAR BLOCK GRAVITY TYPICAL SECTION

PRECAST MODULAR BLOCK TEXTURE SHALL BE SELECTED BY ENGINEER FROM MANUFACTURER'S STANDARD OPTIONS.

▲ PIPE UNDERDRAIN WRAPPED 6-INCH. SLOPE 0.5% MIN. TO SUITABLE DRAINAGE AT WEST END OF WALL. ATTACH END CAP AT EAST END OF PIPE UNDERDRAIN. ATTACH RODENT SHIELD AT WEST END OF PIPE UNDERDRAIN. SEE DETAIL THIS SHEET.

● GEOTEXTILE FABRIC SHALL COMPLETELY SEPARATE WALL BACKFILL TYPE A FROM BACKFILL ON ALL SIDES.

◇ APPLY CONCRETE STAINING FROM TOP OF CAST IN PLACE COPING TO 1'-0" BELOW FINISHED GRADE ELEVATION.

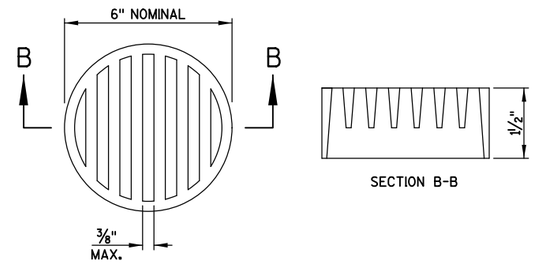

NOTES:
DIMENSIONS ARE APPROXIMATE. THE GRATE IS SIZED TO FIT INTO A PIPE COUPLING. ORIENT SHIELD SO SLOTS ARE VERTICAL.

THE RODENT SHIELD, PIPE COUPLING AND ATTACHMENT SCREWS SHALL BE INCLUDED WITH BID ITEM "PIPE UNDERDRAIN WRAPPED 6-INCH."

THE RODENT SHIELD SHALL BE A PVC GRATE SIMILAR TO THIS DETAIL. THE GRATE IS COMMERCIALLY AVAILABLE AS A FLOOR STRAINER. A PIPE COUPLING IS REQUIRED FOR THE ATTACHMENT OF THIS SHIELD TO THE EXPOSED END OF THE PIPE UNDERDRAIN. THE SHIELD SHALL BE FASTENED TO THE PIPE COUPLING WITH TWO OR MORE NO. 10 x 1-INCH STAINLESS STEEL SHEET METAL SCREWS.

RODENT SHIELD DETAIL

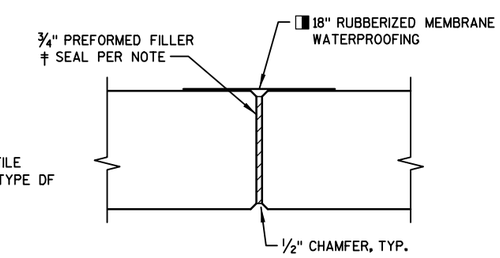

COPING EXPANSION JOINT

DO NOT RUN BAR STEEL THRU JOINT.
MAX. SPACING OF JOINT = 50'

◨ MEMBRANE WATERPROOFING TO EXTEND FROM TOP OF COPING TO BOTTOM OF COPING. MEMBRANE WATERPROOFING INCLUDED IN BID ITEM "WALL MODULAR BLOCK GRAVITY R-13-330".

‡ SEAL ALL EXPOSED HORIZ. & VERT. SURFACES OF FILLER WITH NON-STAINING GRAY NON-BITUMINOUS JOINT SEALER. (1" DEEP AND HOLD 1/8" BELOW SURFACE OF CONCRETE.)

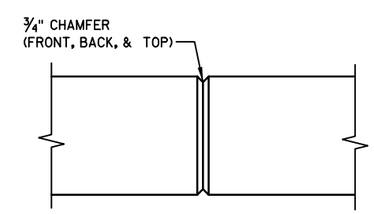

COPING CONTRACTION JOINT

DO NOT RUN BAR STEEL THRU JOINT. MAX. SPACING OF JOINT = 12'. SET JOINT LOCATION TO ALIGN WITH MODULAR BLOCK JOINT BELOW.

WALL EXTERNAL & OVERALL STABILITY EVALUATION

DIMENSIONS	EVALUATED LOCATIONS
WALL HEIGHT (FEET)[1]	
EXPOSED WALL HEIGHT (FEET)	
WALL STATION	
BORING USED	
CAPACITY TO DEMAND RATIO (CDR)[2, 3]	
SLIDING (CDR>1.0)	
ECCENTRICITY (CDR>1.0)	
OVERALL STABILITY (CDR>1.0)	
BEARING RESISTANCE (CDR>1.0)	
FACTORED BEARING RESISTANCE (PSF)	

NOTES:
1. THE WALL HEIGHT INCLUDES AN EMBEDMENT OF 1.5 FT.
2. THE WALL STABILITY EVALUATION INCLUDED A SURCHARGE LOAD OF 100 PSF.
3. CDR VALUES ARE PRESENTED IN CHAPTER 14 OF THE WISDOT BRIDGE MANUAL.

* FINAL DESIGN FOR SLIDING, ECCENTRICITY, AND BEARING RESISTANCE IS THE RESPONSIBILITY OF THE CONTRACTOR'S WALL DESIGNER.

NOTES:
1. THE PROJECT SOILS ENGINEER SHOULD REVIEW THE SUBSURFACE CONDITIONS PRIOR TO CONSTRUCTION OF THE WALLS TO DETERMINE IF THE SOILS HAVE THE MINIMUM BEARING STRENGTH SHOWN IN THE TABLE ABOVE.
2. FINAL DESIGN FOR SLIDING, ECCENTRICITY, AND BEARING RESISTANCE AT OTHER WALL STATIONS IS THE RESPONSIBILITY OF THE CONTRACTOR'S WALL DESIGNER.

SOIL PARAMETERS

TBD

NO.	DATE	REVISION	BY

STATE OF WISCONSIN
DEPARTMENT OF TRANSPORTATION

STRUCTURE R-13-330

DRAWN BY DTH | PLANS CK'D. BMO

WALL DETAILS

SHEET 262

8

8

FILE NAME : S:\MAD\1200--1299\1275\027\Micros\PLAN\080102_wd.dgn

DRAFT

STATE PROJECT NUMBER
5849-02-02

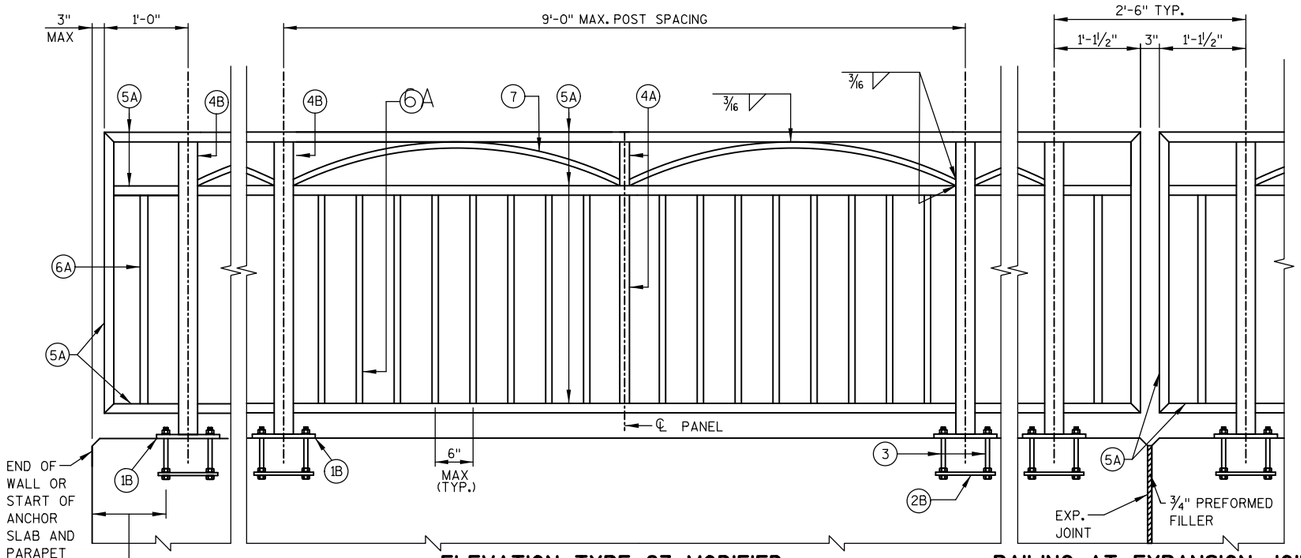

ELEVATION TYPE C3 MODIFIED

RAILING AT EXPANSION JOINT

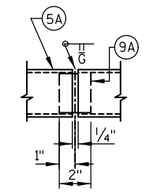

SHOP RAIL SPLICE DETAIL

(LOCATION MUST BE SHOWN ON SHOP DRAWINGS)

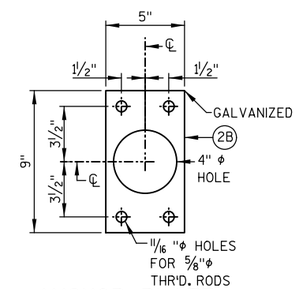

ANCHOR PLATE

LEGEND

(1B) PLATE ⅝" X 6" X 10" WITH ¾" X 1½" SLOTTED HOLES

(2B) ¼" X 5" X 9" ANCHOR PLATE WITH 11/16 " ϕ HOLES FOR THR'D. RODS NO. 3.

(3) ⅝" DIA. X 9" LONG, TYPE 316 STAINLESS STEEL THREADED RODS (MIN. TENSILE STRENGTH = 70 KSI) WITH NUT AND WASHERS OF SAME ALLOY GROUP. ALTERNATE ANCHORAGE: CONCRETE ADHESIVE ANCHORS ⅝-INCH. EMBED 7" IN CONCRETE FOR RAIL POSTS. EMBED 5" IN CONCRETE FOR END RAILS ADHESIVE ANCHORS SHALL CONFORM TO SECTION 502.2.12 OF THE STANDARD SPECIFICATIONS.

(4A) STRUCTURAL TUBING 3" X 1½" X 3/16". PLACE VERTICAL. WELD TO NO. 1 & 5.

(4B) STRUCTURAL TUBING 3" X 3" X 3/16". PLACE VERTICAL. WELD TO NO. 1 & 5.

(5A) STRUCTURAL TUBING 3" X 1½" X 3/16" RAILS. WELD TO NO. 1 & NO. 4. INSIDE OF TUBE TO BE PAINTED AT ALL FIELD ERECTION JOINTS.

(6A) BAR 1" X 1" PICKETS. WELD TO NO. 5. (SPACE AT 6" MAX ℄ TO ℄ SPACING). PLACE VERTICAL.

(7) BAR 1" X 1". BEND TO REQUIRED RADIUS. WELD TO NO. 4 & 5.

(9A) RECTANGULAR SLEEVE FABRICATED FROM 3/16" PLATES. PROVIDE "SLIDING FIT".

(10A) RECTANGULAR SLEEVE FABRICATED FROM 3/16" PLATES. (1'-4" @ FIELD ERECTION JTS.)

RAILING NOTES

BID ITEM SHALL BE "RAILING STEEL TYPE C3 GALVANIZED PEDESTRIAN R-13-264", WHICH SHALL INCLUDE ALL STEEL ITEMS SHOWN.

POST BASE PLATES SHALL BE FLAT WITH ALL SURFACES SMOOTH AND FREE FROM WARP AND ALL EDGES SMOOTH, STRAIGHT AND VERTICAL. ALL PLATE CUTS SHALL BE MACHINE OR MACHINE FLAME CUTS.

ALL PLATES, BARS, AND RECTANGULAR SLEEVES SHALL CONFORM TO ASTM A709 GRADE 36. ALL STRUCTURAL TUBING SHALL CONFORM TO ASTM A500 GRADE B.

ANCHORAGES SHALL BE ACCURATELY PLACED TO PROVIDE CORRECT ALIGNMENT OF RAILING. SET NORMAL TO GRADE.

CUT BOTTOM OF POST TO MAKE POST VERTICAL IN BOTH TRANSVERSE AND LONGITUDINAL DIRECTION.

STEEL SHIMS SHALL BE PROVIDED & USED UNDER BASE PLATES WHERE REQUIRED FOR ALIGNMENT, AND SHALL BE GALVANIZED.

CAULK AROUND PERIMETER OF BASE PLATES, NO. 1, AND FILL BOLT SLOT OPENINGS IN SHIMS AND BASE PLATES WITH NON-STAINING GRAY NON-BITUMINOUS JOINT SEALER.

ALL MATERIAL (EXCEPT NO. 3) SHALL BE GALVANIZED AFTER FABRICATION. PRIOR TO GALVANIZING, THE STEEL RAILING SHALL BE GIVEN A NO. 6 BLAST CLEANING PER SSPC SPECIFICATIONS. PAINT OVER GALVANIZING WITH AN APPROVED TIE COAT AND TOP COAT AS SPECIFIED IN THE SPECIAL PROVISIONS. THE RAILING SHALL BE PAINTED FEDERAL COLOR NO. 14090 (GREEN).

VENT HOLES SHALL BE DRILLED IN POST AND RAIL MEMBERS AS REQUIRED TO FACILITATE GALVANIZING AND DRAINAGE.

RAILING SHALL BE FABRICATED IN LENGTHS THAT INCLUDE 3 OR 4 POSTS.

TOUCH-UP PAINTING TO BE DONE AT COMPLETION OF STEEL RAILING INSTALLATION TO THE SATISFACTION OF THE ENGINEER AT NO EXTRA COST.

COORDINATE POST LAYOUT WITH MSE WALL COPING EXPANSION JOINT LAYOUT.

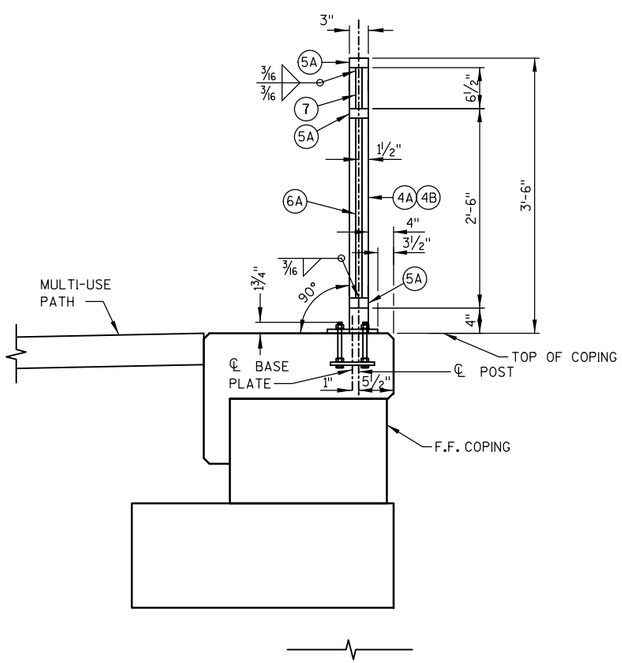

SECTION THRU RAILING

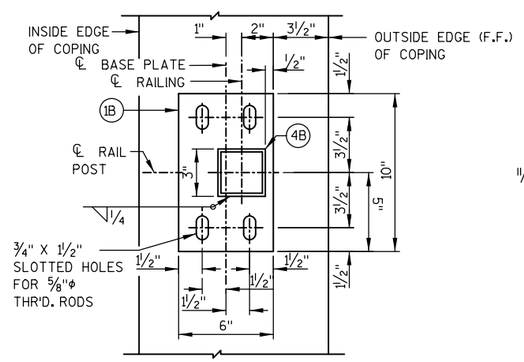

TYPICAL RAIL POST BASE PLATE

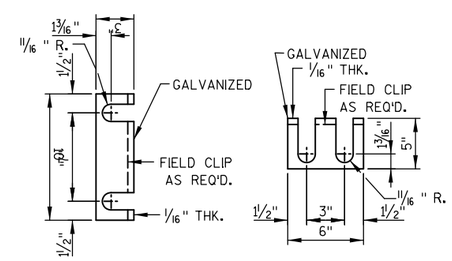

RAIL POST SHIM DETAIL

(2 SETS PER POST)

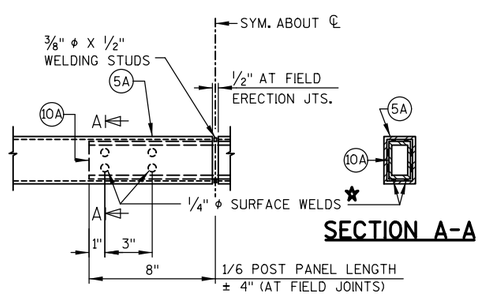

SECTION A-A

FIELD ERECTION JOINT DETAIL

★ MIN. ⅝" FLAT SURFACE DIA. PUNCHINGS OR STUDS MAY BE USED AS AN ALTERNATE.

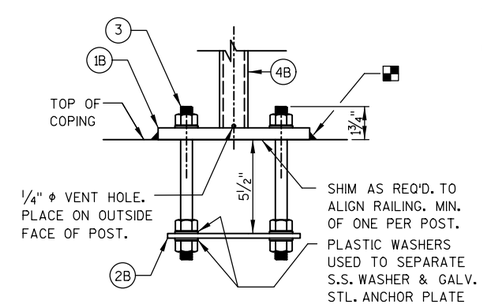

ANCHORAGE FOR RAIL POSTS

NOTE: ANCHOR PLATE NOT REQUIRED WHEN TYPE S ANCHORS ARE USED.

NO.	DATE	REVISION	BY

STATE OF WISCONSIN
DEPARTMENT OF TRANSPORTATION

STRUCTURE R-13-330

DRAWN BY DTH | PLANS CK'D. BMO

RAILING DETAILS

SHEET 263

8

8

FILE NAME : S:\MAD\1200--1299\1275\027\Micros\PLAN\080103_wd.dgn

BORINGS PERFORMED AND REPORT COMPLETED BY:
SOILS & ENGINEERING SERVICES, INC. (SES)
1102 STEWART STREET
MADISON, WI 53713

BORINGS WERE PERFORMED ON 11/27/2017 AND 01/09/2019.

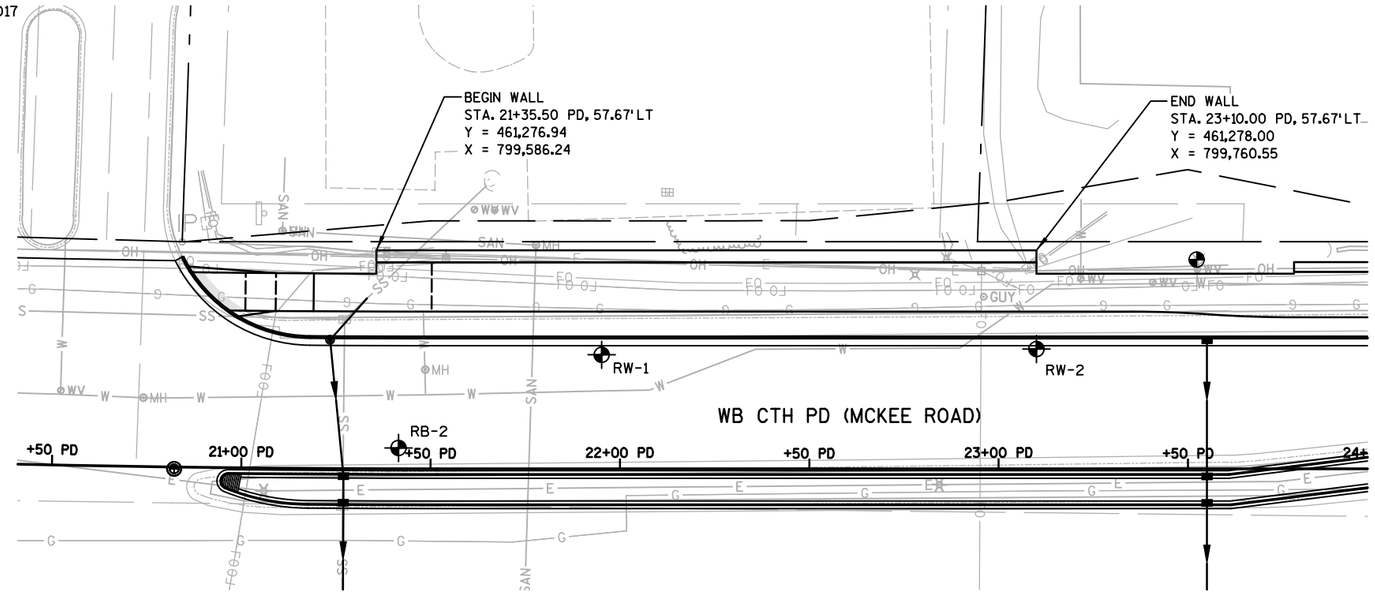

STATE PROJECT NUMBER

DRAFT

58[illegible]-02-02

MATERIAL SYMBOLS

ASPHALT	TOPSOIL	PEAT
CONCRETE	FILL	GRAVEL
SAND	CLAY	SILT
BOULDERS OR COBBLES	LIMESTONE	BEDROCK (UNKNOWN)
SHALE	SANDSTONE	IGNEOUS/ META

LEGEND OF BORING

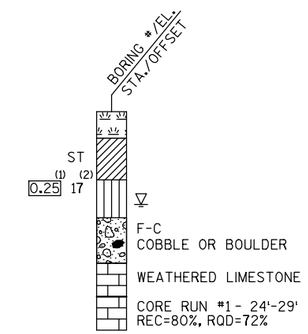

(1) UNCONFINED STRENGTH, AS DETERMINED BY A POCKET PENETROMETER (TSF)

(2) UNLESS OTHERWISE, SPECIFIED THE SPT 'N' VALUE IS BASED ON AASHTO T-206, STANDARD PENETRATION TEST. THE SPT 'N' VALUE PRESENTED HAS NOT BEEN CORRECTED FOR OVERBURDEN PRESSURE OR HAMMER EFFICIENCY.

GROUND WATER ELEVATION

- AT TIME OF DRILLING
- END OF DRILLING
- AFTER DRILLING

ABBREVIATIONS

F-FINE M-MEDIUM C-COARSE ST-SHELBY TUBE

SUBSURFACE EXPLORATION FOR FOUNDATION DESIGN AND BIDDERS INFORMATION

BORINGS WERE COMPLETED AT POINTS APPROXIMATELY AS INDICATED ON THIS DRAWING TO OBTAIN INFORMATION CONCERNING THE CHARACTER OF SUBSURFACE MATERIALS FOUND AT THE SITE. BECAUSE THE INVESTIGATED DEPTHS ARE LIMITED AND THE AREA OF THE BORINGS IS VERY SMALL IN RELATION TO THE ENTIRE SITE, THE WISCONSIN DEPARTMENT OF TRANSPORTATION DOES NOT WARRANT SIMILAR SUBSURFACE CONDITIONS BELOW, BETWEEN, OR BEYOND THESE BORINGS. VARIATIONS IN SOIL CONDITIONS SHOULD BE EXPECTED AND FLUCTUATIONS IN GROUNDWATER LEVELS MAY OCCUR.

NO.	DATE	REVISION	BY

STATE OF WISCONSIN
DEPARTMENT OF TRANSPORTATION
STRUCTURES DESIGN SECTION

STRUCTURE B-13-330

DRAWN BY DTH PLANS CK'D. BMO

SUBSURFACE EXPLORATION

SHEET 4

8

8

SCALE =

FILE NAME : S:\MAD\1200--1299\1275\027\Micros\PLAN\080104_sx.dgn

DRAFT

STATE PROJECT NUMBER
5649-02-02

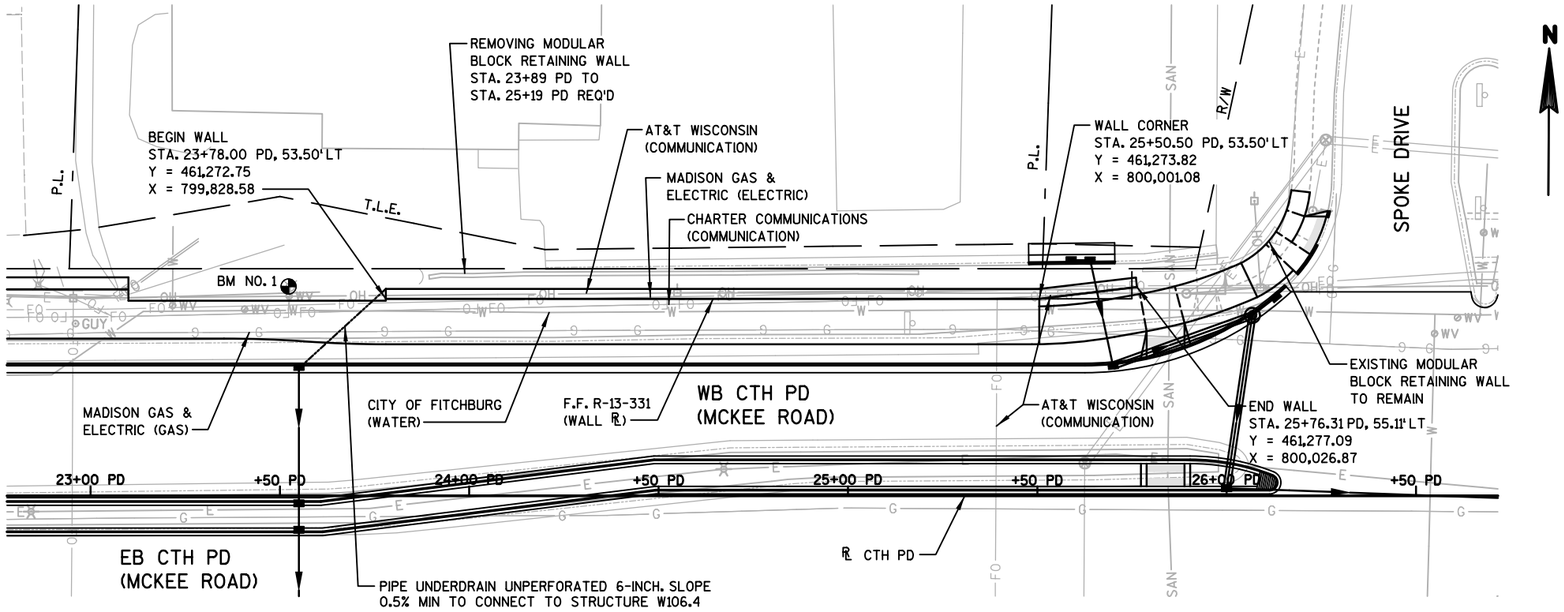

PLAN

(MODULAR BLOCK GRAVITY WALL)

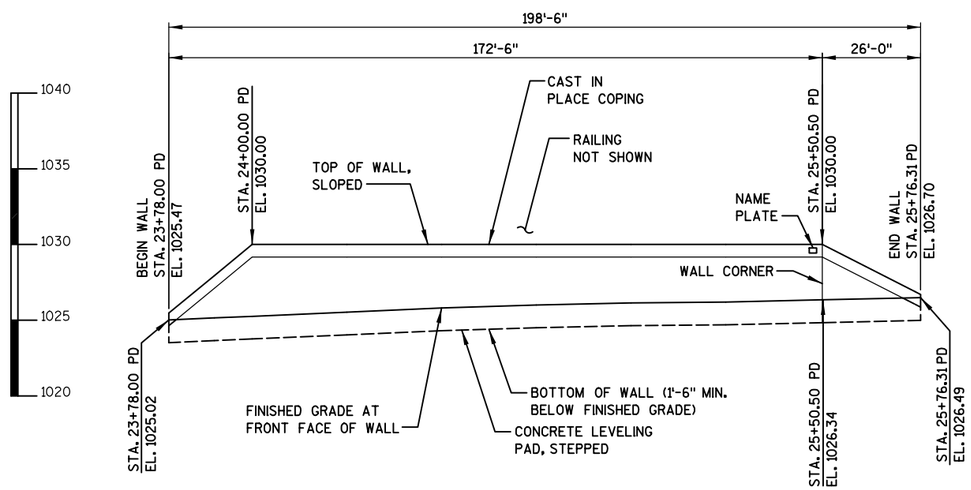

ELEVATION

(LOOKING AT F.F. OF WALL)

GENERAL NOTES

DRAWINGS SHALL NOT BE SCALED.

THE PLAN QUANTITY FOR THE BID ITEM "WALL MODULAR BLOCK GRAVITY R-13-331" IS BASED ON A WALL HEIGHT MEASURED FROM THE TOP OF WALL TO A CONSTANT DEPTH OF 1'-6" BELOW FINISHED GRADE.

ALL DIMENSIONS AND STATIONING ARE ALONG THE FRONT FACE OF WALL AT FINISHED GROUND, UNLESS OTHERWISE SHOWN.

A NAME PLATE SHALL BE PLACED AS DIRECTED BY THE ENGINEER.

BAR STEEL REINFORCEMENT FOR CAST IN PLACE CONCRETE SHALL BE EPOXY COATED.

BAR STEEL REINFORCEMENT SHALL BE EMBEDDED 2 INCHES CLEAR UNLESS OTHERWISE SHOWN OR NOTED.

BEVEL EXPOSED EDGES OF CONCRETE 3/4-INCH UNLESS NOTED OTHERWISE.

WET CAST BLOCKS ARE REQUIRED FOR THIS WALL.

DESIGN DATA

THE CONTRACTOR SHALL PROVIDE COMPLETE DESIGN, PLANS, DETAILS, SPECIFICATIONS, AND SHOP DRAWINGS FOR THE RETAINING WALLS IN ACCORDANCE WITH THE SPECIAL PROVISIONS. THE RETAINING WALL MANUFACTURER SHALL PROVIDE TECHNICAL ASSISTANCE TO THE CONTRACTOR DURING CONSTRUCTION. THE COST OF FURNISHING THESE ITEMS SHALL BE INCLUDED IN THE BID ITEM "WALL MODULAR BLOCK GRAVITY R-13-331."

PLANS, ELEVATIONS AND DETAILS SHOWN ON THESE DRAWINGS ARE INTENDED TO INDICATE WALL LOCATIONS, LENGTHS, HEIGHTS, AND DETAILS COMMON TO THE WALL SYSTEM SELECTED. THE CONTRACTOR SHALL VERIFY THAT THE WALL SYSTEM SELECTED WILL CONFORM TO THE REQUIRED ALIGNMENTS AND DETAILS.

THE RETAINING WALL IS TO BE DESIGNED USING THE ELEVATIONS GIVEN ON THIS SHEET.

DESIGN RETAINING WALL FOR A LIVE LOAD SURCHARGE OF 100 PSF.

THE MAXIMUM VALUE OF THE ANGLE OF INTERNAL FRICTION OF THE WALL BACKFILL MATERIAL SHALL BE ASSUMED TO BE 30° WITHOUT CERTIFIED TEST VALUES.

TOP OF WALL ELEVATIONS SHOWN ARE MINIMUM VALUES. MODULAR BLOCK WALL SHALL BE STEPPED AT THE LOCATIONS DETERMINED BY THE WALL MANUFACTURER.

ALLOWABLE WALL SYSTEMS

1. WALL MODULAR BLOCK GRAVITY

LIST OF DRAWINGS

1. GENERAL PLAN
2. WALL DETAILS
3. RAILING DETAILS
4. SUBSURFACE EXPLORATION

GEOMETRY TABLE

STATION	OFFSET TO F.F. WALL	TOP OF WALL ELEV.	FINISHED GRADE ELEV.
23+78.00	53.50' LT	1025.47	1025.02
23+90.00	53.50' LT	1027.94	1025.15
24+00.00	53.50' LT	1030.00	1025.26
24+25.00	53.50' LT	1030.00	1025.54
24+50.00	53.50' LT	1030.00	1025.81
24+75.00	53.50' LT	1030.00	1026.00
25+00.00	53.50' LT	1030.00	1026.14
25+25.00	53.50' LT	1030.00	1026.20
25+50.50	53.50' LT	1030.00	1026.34
25+75.00	54.96' LT	1026.87	1026.48
25+76.31	55.11' LT	1026.70	1026.49

TOTAL ESTIMATED QUANTITIES

BID ITEM	BID ITEMS	UNIT	TOTALS
513.8016	RAILING STEEL PEDESTRIAN TYPE C3	LF	172
517.1010.S.003	CONCRETE STAINING R-13-331	SF	840
612.0206	PIPE UNDERDRAIN UNPERFORATED 6-INCH	LF	30
612.0406	PIPE UNDERDRAIN WRAPPED 6-INCH	LF	175
SPV.0165.151	WALL MODULAR BLOCK GRAVITY R-13-331	SF	920

ALL ITEMS ARE CATEGORY 0040

BENCHMARKS

NO.	STATION	DESCRIPTION	ELEV.
1	23+52.72 PD, 55.09' LT	TOP NUT OF FIRE HYDRANT	1029.35

DESIGN CONSULTANT CONTACT:
KYLE BETH (608) 251-4843

BRIDGE OFFICE CONTACT:
WILLIAM DREHER (608) 266-8489

NO.	DATE	REVISION	BY

STRAND ASSOCIATES®
910 WEST WINGRA DRIVE
MADISON, WISCONSIN 53715
(608)-251-4843
(608) 251-8655 FAX
WWW.STRAND.COM

STATE OF WISCONSIN
DEPARTMENT OF TRANSPORTATION

ACCEPTED _____ _____
CHIEF STRUCTURES DESIGN ENGINEER DATE

STRUCTURE R-13-331

RETAINING WALL ALONG MCKEE ROAD

COUNTY DANE | ~~TOWN~~/CITY/~~VILLAGE~~ FITCHBURG

DESIGN SPEC. AASHTO LRFD BRIDGE DESIGN SPECIFICATIONS

DESIGNED BY	DESIGN CK'D.	DRAWN BY	PLANS CK'D.
KPB	BMO	DTH	BMO

GENERAL PLAN

SHEET 1 OF 4

8

8

FILE NAME : S:\MAD\1200--1299\1275\027\Micros\PLAN\080201_gp.dgn

DRAFT

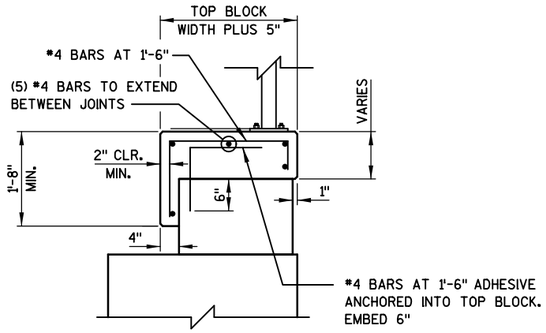

CAST IN PLACE CONCRETE COPING DETAIL

NOTE:
BAR STEEL REINFORCEMENT AND CAST IN PLACE CONCRETE TO BE INCLUDED IN BID ITEM "WALL MODULAR BLOCK GRAVITY R-13-330"

DO NOT RUN BAR STEEL THRU EXPANSION OR CONTRACTION JOINT.

MATERIAL PROPERTIES:
CONCRETE MASONARY _____ fc' = 3,500 psi

HIGH STRENGTH BAR STEEL
REINFORCEMENT, GRADE 60 _____ fy = 60,000 psi

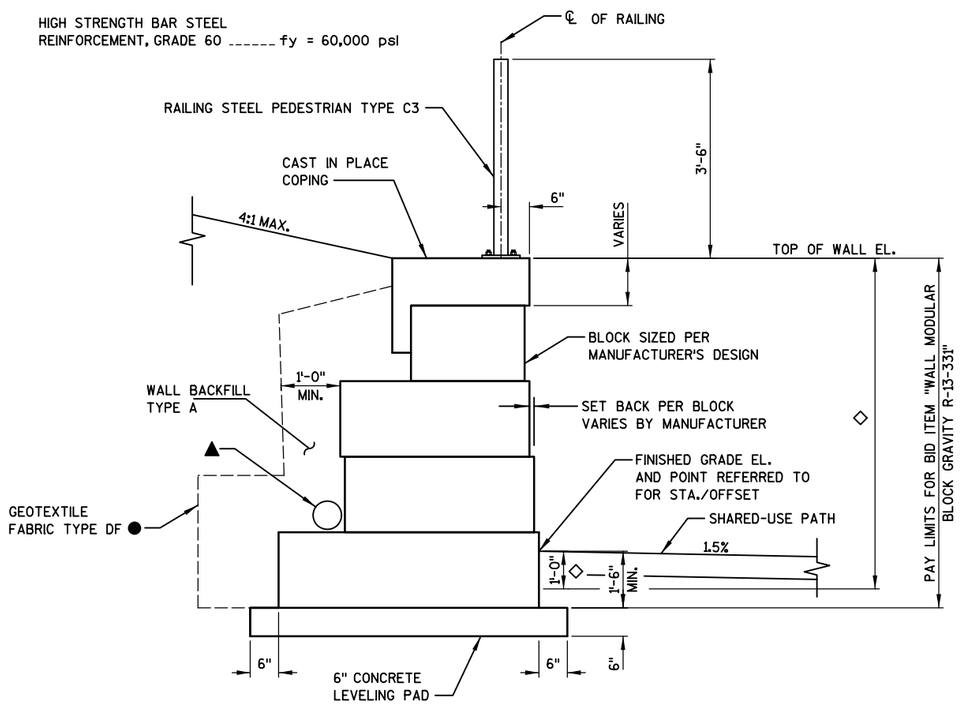

WALL MODULAR BLOCK GRAVITY TYPICAL SECTION

PRECAST MODULAR BLOCK TEXTURE SHALL BE SELECTED BY ENGINEER FROM MANUFACTURER'S STANDARD OPTIONS.

▲ PIPE UNDERDRAIN WRAPPED 6-INCH. SLOPE 0.5% MIN. TO CONNECT TO STRUCTURE W106.4

GEOTEXTILE FABRIC SHALL COMPLETELY SEPARATE WALL BACKFILL TYPE A FROM BACKFILL ON ALL SIDES.

● APPLY CONCRETE STAINING FROM TOP OF CAST IN PLACE COPING TO 1'-0" BELOW FINISHED GRADE ELEVATION.

◇

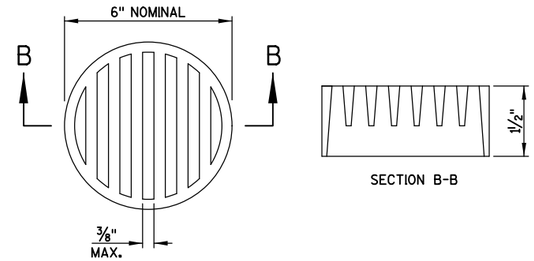

NOTES:
DIMENSIONS ARE APPROXIMATE. THE GRATE IS SIZED TO FIT INTO A PIPE COUPLING. ORIENT SHIELD SO SLOTS ARE VERTICAL.

THE RODENT SHIELD, PIPE COUPLING AND ATTACHMENT SCREWS SHALL BE INCLUDED WITH BID ITEM "PIPE UNDERDRAIN WRAPPED 6-INCH."

THE RODENT SHIELD SHALL BE A PVC GRATE SIMILAR TO THIS DETAIL. THE GRATE IS COMMERCIALLY AVAILABLE AS A FLOOR STRAINER. A PIPE COUPLING IS REQUIRED FOR THE ATTACHMENT OF THIS SHIELD TO THE EXPOSED END OF THE PIPE UNDERDRAIN. THE SHIELD SHALL BE FASTENED TO THE PIPE COUPLING WITH TWO OR MORE NO. 10 x 1-INCH STAINLESS STEEL SHEET METAL SCREWS.

RODENT SHIELD DETAIL

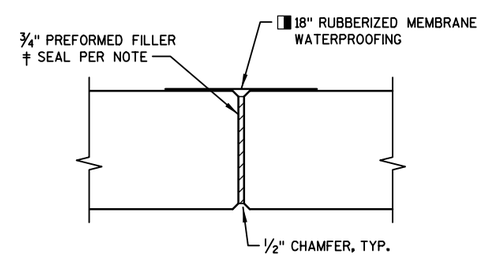

COPING EXPANSION JOINT

DO NOT RUN BAR STEEL THRU JOINT.
MAX. SPACING OF JOINT = 50'

◨ MEMBRANE WATERPROOFING TO EXTEND FROM TOP OF COPING TO BOTTOM OF COPING. MEMBRANE WATERPROOFING INCLUDED IN BID ITEM "WALL MODULAR BLOCK GRAVITY R-13-330".

‡ SEAL ALL EXPOSED HORIZ. & VERT. SURFACES OF FILLER WITH NON-STAINING GRAY NON-BITUMINOUS JOINT SEALER. (1" DEEP AND HOLD 1/8" BELOW SURFACE OF CONCRETE.)

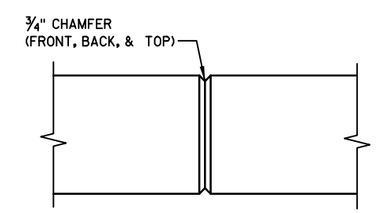

COPING CONTRACTION JOINT

DO NOT RUN BAR STEEL THRU JOINT. MAX. SPACING OF JOINT = 12'. SET JOINT LOCATION TO ALIGN WITH MODULAR BLOCK JOINT BELOW.

WALL EXTERNAL & OVERALL STABILITY EVALUATION

DIMENSIONS	EVALUATED LOCATIONS
WALL HEIGHT (FEET)[1]	
EXPOSED WALL HEIGHT (FEET)	
WALL STATION	
BORING USED	
CAPACITY TO DEMAND RATIO (CDR)[2, 3]	
SLIDING (CDR>1.0)	
ECCENTRICITY (CDR>1.0)	
OVERALL STABILITY (CDR>1.0)	
BEARING RESISTANCE (CDR>1.0)	
FACTORED BEARING RESISTANCE (PSF)	

NOTES:
1. THE WALL HEIGHT INCLUDES AN EMBEDMENT OF 1.5 FT.
2. THE WALL STABILITY EVALUATION INCLUDED A SURCHARGE LOAD OF 100 PSF.
3. CDR VALUES ARE PRESENTED IN CHAPTER 14 OF THE WISDOT BRIDGE MANUAL.
* FINAL DESIGN FOR SLIDING, ECCENTRICITY, AND BEARING RESISTANCE IS THE RESPONSIBILITY OF THE CONTRACTOR'S WALL DESIGNER.

NOTES:
1. THE PROJECT SOILS ENGINEER SHOULD REVIEW THE SUBSURFACE CONDITIONS PRIOR TO CONSTRUCTION OF THE WALLS TO DETERMINE IF THE SOILS HAVE THE MINIMUM BEARING STRENGTH SHOWN IN THE TABLE ABOVE.

2. FINAL DESIGN FOR SLIDING, ECCENTRICITY, AND BEARING RESISTANCE AT OTHER WALL STATIONS IS THE RESPONSIBILITY OF THE CONTRACTOR'S WALL DESIGNER.

SOIL PARAMETERS

STRATUM LOCATIONS & SOIL DESCRIPTIONS	TOTAL UNIT WEIGHT (PCF)	FRICTION ANGLE (DEGREES)	COHESION (PSF)
BORING			

8

8

NO.	DATE	REVISION	BY

STATE OF WISCONSIN
DEPARTMENT OF TRANSPORTATION

STRUCTURE R-13-331

DRAWN BY DTH | PLANS CK'D. BMO

WALL DETAILS

SHEET 266

DRAFT

STATE PROJECT NUMBER
5849-02-02

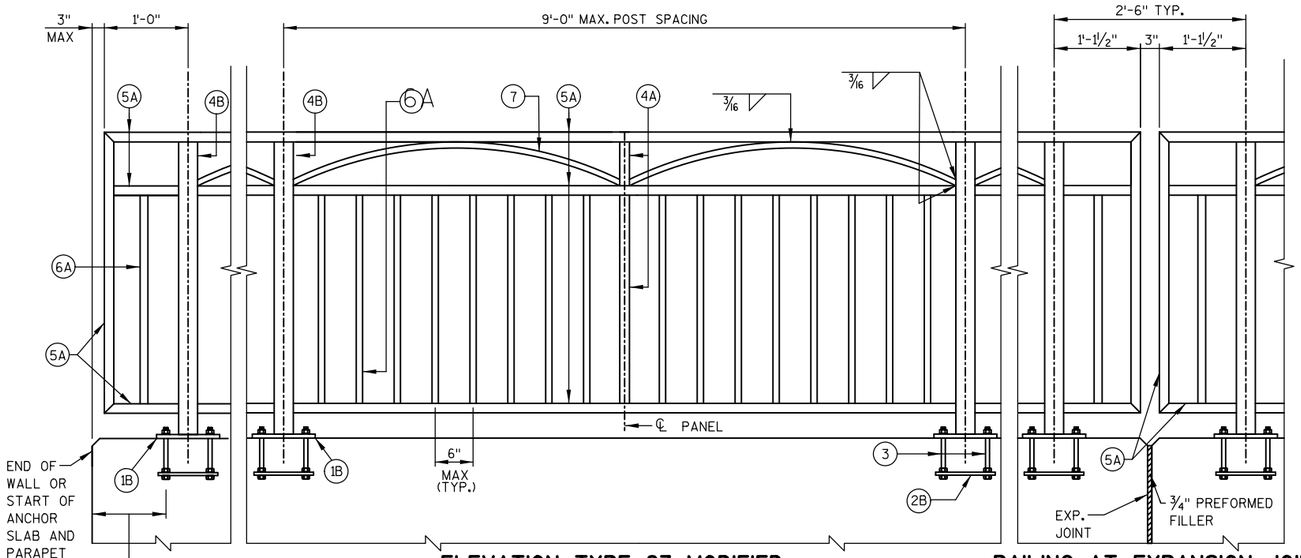

ELEVATION TYPE C3 MODIFIED

RAILING AT EXPANSION JOINT

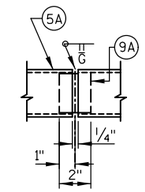

SHOP RAIL SPLICE DETAIL

(LOCATION MUST BE SHOWN ON SHOP DRAWINGS)

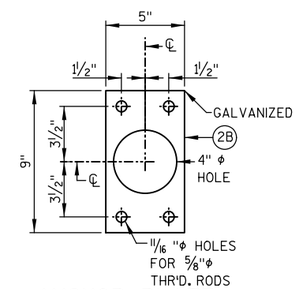

ANCHOR PLATE

LEGEND

(1B) PLATE ⅝" X 6" X 10" WITH ¾" X 1½" SLOTTED HOLES

(2B) ¼" X 5" X 9" ANCHOR PLATE WITH 11/16 " ϕ HOLES FOR THR'D. RODS NO. 3.

(3) ⅝" DIA. X 9" LONG, TYPE 316 STAINLESS STEEL THREADED RODS (MIN. TENSILE STRENGTH = 70 KSI) WITH NUT AND WASHERS OF SAME ALLOY GROUP. ALTERNATE ANCHORAGE: CONCRETE ADHESIVE ANCHORS ⅝-INCH. EMBED 7" IN CONCRETE FOR RAIL POSTS. EMBED 5" IN CONCRETE FOR END RAILS ADHESIVE ANCHORS SHALL CONFORM TO SECTION 502.2.12 OF THE STANDARD SPECIFICATIONS.

(4A) STRUCTURAL TUBING 3" X 1½" X 3/16". PLACE VERTICAL. WELD TO NO. 1 & 5.

(4B) STRUCTURAL TUBING 3" X 3" X 3/16". PLACE VERTICAL. WELD TO NO. 1 & 5.

(5A) STRUCTURAL TUBING 3" X 1½" X 3/16" RAILS. WELD TO NO. 1 & NO. 4. INSIDE OF TUBE TO BE PAINTED AT ALL FIELD ERECTION JOINTS.

(6A) BAR 1" X 1" PICKETS. WELD TO NO. 5. (SPACE AT 6" MAX ℄ TO ℄ SPACING). PLACE VERTICAL.

(7) BAR 1" X 1". BEND TO REQUIRED RADIUS. WELD TO NO. 4 & 5.

(9A) RECTANGULAR SLEEVE FABRICATED FROM 3/16" PLATES. PROVIDE "SLIDING FIT".

(10A) RECTANGULAR SLEEVE FABRICATED FROM 3/16" PLATES. (1'-4" @ FIELD ERECTION JTS.)

RAILING NOTES

BID ITEM SHALL BE "RAILING STEEL TYPE C3 GALVANIZED PEDESTRIAN R-13-264", WHICH SHALL INCLUDE ALL STEEL ITEMS SHOWN.

POST BASE PLATES SHALL BE FLAT WITH ALL SURFACES SMOOTH AND FREE FROM WARP AND ALL EDGES SMOOTH, STRAIGHT AND VERTICAL. ALL PLATE CUTS SHALL BE MACHINE OR MACHINE FLAME CUTS.

ALL PLATES, BARS, AND RECTANGULAR SLEEVES SHALL CONFORM TO ASTM A709 GRADE 36. ALL STRUCTURAL TUBING SHALL CONFORM TO ASTM A500 GRADE B.

ANCHORAGES SHALL BE ACCURATELY PLACED TO PROVIDE CORRECT ALIGNMENT OF RAILING. SET NORMAL TO GRADE.

CUT BOTTOM OF POST TO MAKE POST VERTICAL IN BOTH TRANSVERSE AND LONGITUDINAL DIRECTION.

STEEL SHIMS SHALL BE PROVIDED & USED UNDER BASE PLATES WHERE REQUIRED FOR ALIGNMENT, AND SHALL BE GALVANIZED.

CAULK AROUND PERIMETER OF BASE PLATES, NO. 1, AND FILL BOLT SLOT OPENINGS IN SHIMS AND BASE PLATES WITH NON-STAINING GRAY NON-BITUMINOUS JOINT SEALER.

ALL MATERIAL (EXCEPT NO. 3) SHALL BE GALVANIZED AFTER FABRICATION. PRIOR TO GALVANIZING, THE STEEL RAILING SHALL BE GIVEN A NO. 6 BLAST CLEANING PER SSPC SPECIFICATIONS. PAINT OVER GALVANIZING WITH AN APPROVED TIE COAT AND TOP COAT AS SPECIFIED IN THE SPECIAL PROVISIONS. THE RAILING SHALL BE PAINTED FEDERAL COLOR NO. 14090 (GREEN).

VENT HOLES SHALL BE DRILLED IN POST AND RAIL MEMBERS AS REQUIRED TO FACILITATE GALVANIZING AND DRAINAGE.

RAILING SHALL BE FABRICATED IN LENGTHS THAT INCLUDE 3 OR 4 POSTS.

TOUCH-UP PAINTING TO BE DONE AT COMPLETION OF STEEL RAILING INSTALLATION TO THE SATISFACTION OF THE ENGINEER AT NO EXTRA COST.

COORDINATE POST LAYOUT WITH MSE WALL COPING EXPANSION JOINT LAYOUT.

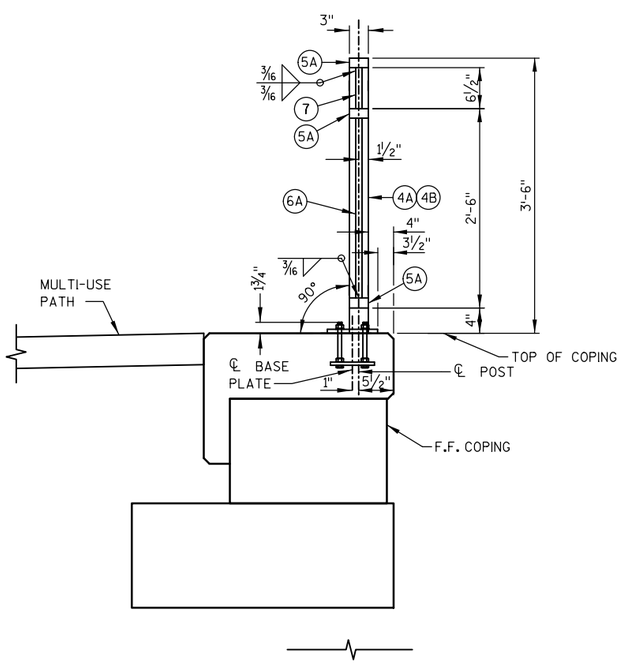

SECTION THRU RAILING

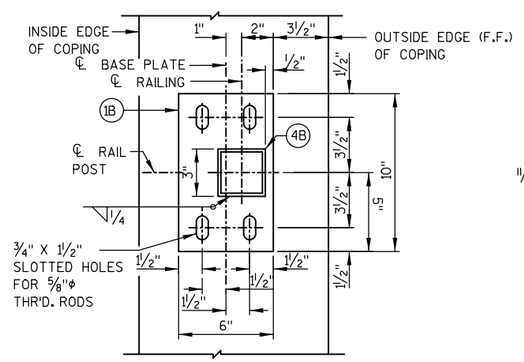

TYPICAL RAIL POST BASE PLATE

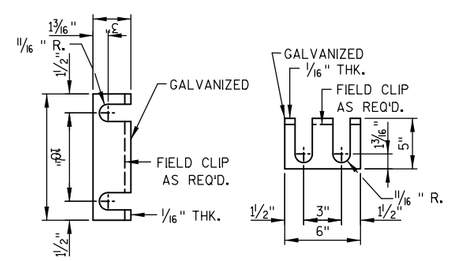

RAIL POST SHIM DETAIL

(2 SETS PER POST)

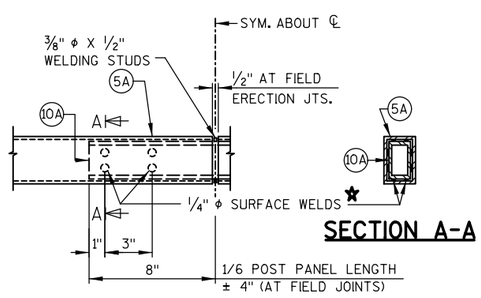

SECTION A-A

FIELD ERECTION JOINT DETAIL

★ MIN. ⅝" FLAT SURFACE DIA. PUNCHINGS OR STUDS MAY BE USED AS AN ALTERNATE.

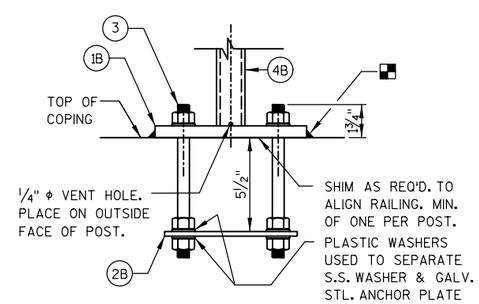

ANCHORAGE FOR RAIL POSTS

NOTE: ANCHOR PLATE NOT REQUIRED WHEN TYPE S ANCHORS ARE USED.

NO.	DATE	REVISION	BY

STATE OF WISCONSIN
DEPARTMENT OF TRANSPORTATION

STRUCTURE R-13-331

DRAWN BY DTH | PLANS CK'D. BMO

RAILING DETAILS

SHEET 3 267

8

8

FILE NAME : S:\MAD\1200--1299\1275\027\Micros\PLAN\080203_wd.dgn

BORINGS PERFORMED AND REPORT COMPLETED BY:
SOILS & ENGINEERING SERVICES, INC. (SES)
1102 STEWART STREET
MADISON, WI 53713

BORINGS WERE PERFORMED ON 11/27/2017
AND 01/09/2019.

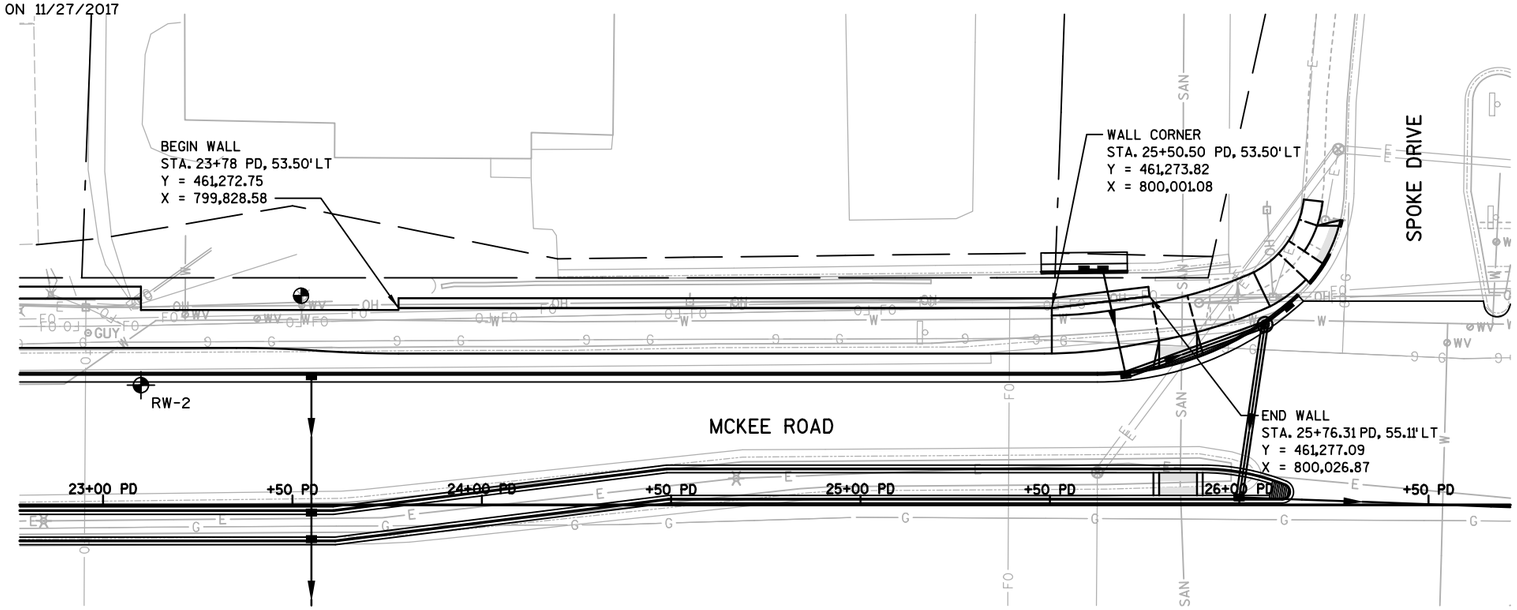

STATE PROJECT NUMBER

DRAFT

5843-02-02

MATERIAL SYMBOLS

ASPHALT	TOPSOIL	PEAT
CONCRETE	FILL	GRAVEL
SAND	CLAY	SILT
BOULDERS OR COBBLES	LIMESTONE	BEDROCK (UNKNOWN)
SHALE	SANDSTONE	IGNEOUS/ META

LEGEND OF BORING

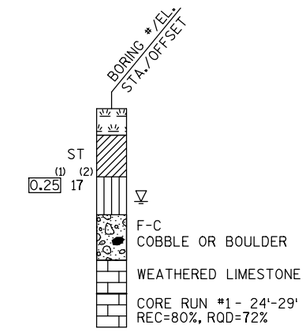

(1) UNCONFINED STRENGTH, AS DETERMINED BY A POCKET PENETROMETER (TSF)

(2) UNLESS OTHERWISE, SPECIFIED THE SPT 'N' VALUE IS BASED ON AASHTO T-206, STANDARD PENETRATION TEST. THE SPT 'N' VALUE PRESENTED HAS NOT BEEN CORRECTED FOR OVERBURDEN PRESSURE OR HAMMER EFFICIENCY.

GROUND WATER ELEVATION

- AT TIME OF DRILLING
- END OF DRILLING
- AFTER DRILLING

ABBREVIATIONS

F-FINE M-MEDIUM C-COARSE ST-SHELBY TUBE

SUBSURFACE EXPLORATION FOR FOUNDATION DESIGN AND BIDDERS INFORMATION

BORINGS WERE COMPLETED AT POINTS APPROXIMATELY AS INDICATED ON THIS DRAWING TO OBTAIN INFORMATION CONCERNING THE CHARACTER OF SUBSURFACE MATERIALS FOUND AT THE SITE. BECAUSE THE INVESTIGATED DEPTHS ARE LIMITED AND THE AREA OF THE BORINGS IS VERY SMALL IN RELATION TO THE ENTIRE SITE, THE WISCONSIN DEPARTMENT OF TRANSPORTATION DOES NOT WARRANT SIMILAR SUBSURFACE CONDITIONS BELOW, BETWEEN, OR BEYOND THESE BORINGS. VARIATIONS IN SOIL CONDITIONS SHOULD BE EXPECTED AND FLUCTUATIONS IN GROUNDWATER LEVELS MAY OCCUR.

NO.	DATE	REVISION	BY

STATE OF WISCONSIN
DEPARTMENT OF TRANSPORTATION
STRUCTURES DESIGN SECTION

STRUCTURE B-13-331

DRAWN BY DTH PLANS CK'D. BMO

SUBSURFACE EXPLORATION

SHEET 4
268

8

8

SCALE =

FILE NAME : S:\MAD\1200--1299\1275\027\Micros\PLAN\080204_sx.dgn

DRAFT

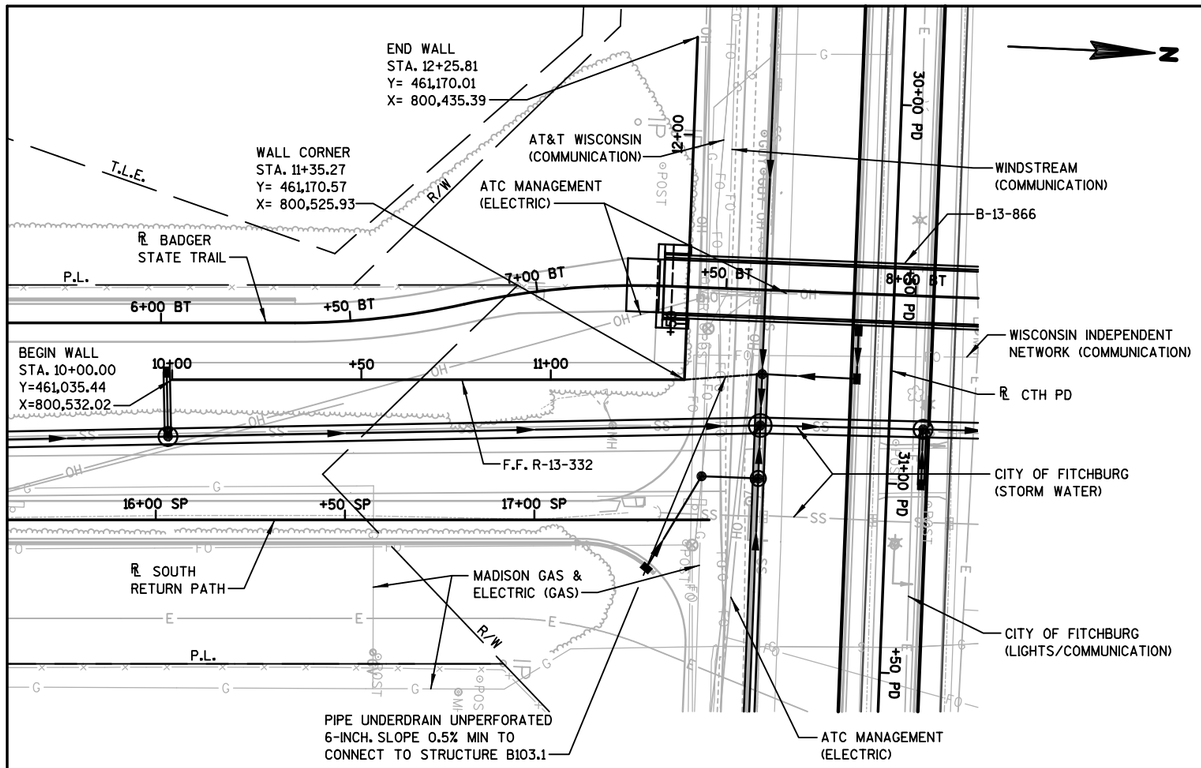

PLAN

(CONCRETE PANEL MECHANICALLY STABILIZED EARTH WALL)

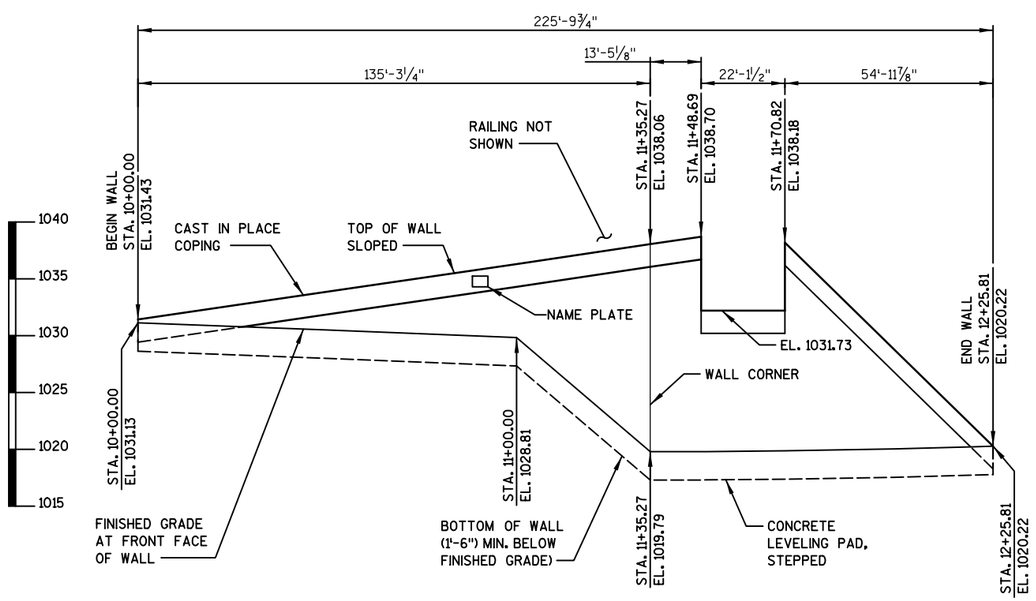

UNWRAPPED ELEVATION VIEW

(LOOKING AT F.F. OF WALL)

ALLOWABLE WALL SYSTEMS

1. CONCRETE PANEL MECHANICALLY STABILIZED EARTH LRFD.

LIST OF DRAWINGS

1. GENERAL PLAN
2. TYPICAL SECTIONS
3. DESIGN TABLES
4. RAILING DETAILS
5. AESTHETIC & COPING DETAILS
6. SUBSURFACE EXPLORATION

GENERAL NOTES

DRAWINGS SHALL NOT BE SCALED.

THE PLAN QUANTITY FOR THE BID ITEM "WALL CONCRETE PANEL MECHANICALLY STABILIZED EARTH LRFD R-13-332" IS BASED ON A WALL HEIGHT MEASURED FROM THE TOP OF WALL TO A CONSTANT DEPTH OF 1'-6" BELOW FINISHED GRADE.

ALL DIMENSIONS, STATIONING, AND OFFSETS ARE ALONG THE FRONT FACE OF WALL AT FINISHED GROUND, UNLESS OTHERWISE SHOWN.

A NAME PLATE SHALL BE PLACED AS DIRECTED BY THE ENGINEER. CENTER NAME PLATE ON COPING.

ALL BAR STEEL REINFORCEMENT FOR CAST-IN-PLACE CONCRETE IS TO BE EPOXY COATED.

BAR STEEL REINFORCEMENT SHALL BE EMBEDDED 2-INCHES CLEAR UNLESS OTHERWISE SHOWN OR NOTED. BEVEL EXPOSED EDGES OF CONCRETE ¾-INCH, UNLESS NOTED OTHERWISE.

DESIGN DATA

THE CONTRACTOR SHALL PROVIDE COMPLETE DESIGN, PLANS, DETAILS, SPECIFICATIONS, AND SHOP DRAWINGS FOR THE RETAINING WALLS IN ACCORDANCE WITH THE SPECIAL PROVISIONS. THE RETAINING WALL MANUFACTURER SHALL PROVIDE TECHNICAL ASSISTANCE TO THE CONTRACTOR DURING CONSTRUCTION. THE COST OF FURNISHING THESE ITEMS SHALL BE INCLUDED IN THE BID ITEM "WALL CONCRETE PANEL MECHINICALLY STABILIZED EARTH LFRD R-13-332."

PLANS, ELEVATIONS AND DETAILS SHOWN ON THESE DRAWINGS ARE INTENDED TO INDICATE WALL LOCATIONS, LENGTHS, HEIGHTS, AND DETAILS COMMON TO THE WALL SYSTEM SELECTED. THE CONTRACTOR SHALL VERIFY THAT THE WALL SYSTEM SELECTED WILL CONFORM TO THE REQUIRED ALIGNMENTS AND DETAILS.

THE RETAINING WALL IS TO BE DESIGNED USING THE ELEVATIONS GIVEN ON THIS SHEET.

DESIGN FOR RETAINING WALL TO PROVIDE FOR FINISHED GRADE SLOPED BEHIND WALL AS SHOWN ON THE TYPICAL WALL SECTION AND ROADWAY CROSS SECTIONS.

DESIGN RETAINING WALL FOR A LIVE LOAD SURCHARGE OF 100 PSF.

THE MAXIMUM VALUE OF THE ANGLE OF INTERNAL FRICTION OF THE WALL BACKFILL MATERIAL SHALL BE ASSUMED TO BE 30° WITHOUT CERTIFIED TEST VALUES.

ULTIMATE DESIGN STRESSES

CONCRETE MASONRY, COPING ———— f'c = 3,500 PSI
HIGH STRENGTH BAR STEEL
REINFORCEMENT, GRADE 60 ———— fy = 60,000 PSI

DESIGN CONSULTANT CONTACT:
KYLE BETH (608) 251-4843

BRIDGE OFFICE CONTACT:
WILLIAM DREHER (608) 266-8489

BENCHMARKS

NO.	STATION	DESCRIPTION	ELEV.
1	27+19.42 PD, 75.02'LT	TOP NUT OF FIRE HYDRANT	1027.67
2	30+51.62 PD, 52.85'LT	TOP NUT OF FIRE HYDRANT	1022.34
3	34+53.47 PD, 53.87'LT	TOP NUT OF FIRE HYDRANT	1024.46

TOTAL ESTIMATED QUANTITIES

BID ITEM NUMBER	BID ITEMS	UNIT	TOTALS
513.8016.004	RAILING STEEL PEDESTRIAN TYPE C3	LF	220
517.1010.S.004	CONCRETE STAINING R-13-332	SF	2580
517.1050.S.002	ARCHITECTURAL SURFACE TREATMENT R-13-332	SF	1580
612.0206	PIPE UNDERDRAIN UNPERFORATED 6-INCH	LF	25
612.0406	PIPE UNDERDRAIN WRAPPED 6-INCH	LF	220
SPV.0165.152	WALL CONCRETE PANEL MECHANICALLY STABILIZED EARTH LRFD R-13-332	SF	2360

ALL BID ITEMS ARE CATEGORY 0050

NO.	DATE	REVISION	BY

STRAND ASSOCIATES®
910 WEST WINGRA DRIVE
MADISON, WISCONSIN 53715
(608)-251-4843
(608) 251-8655 FAX
WWW.STRAND.COM

STATE OF WISCONSIN
DEPARTMENT OF TRANSPORTATION

ACCEPTED _____ _____
CHIEF STRUCTURES DESIGN ENGINEER DATE

STRUCTURE R-13-332

RET. WALL AT MCKEE RD. AND BADGER ST. TRAIL

COUNTY DANE | ~~TOWN~~/CITY/~~VILLAGE~~ FITCHBURG

DESIGN SPEC.
AASHTO LRFD BRIDGE DESIGN SPECIFICATIONS

DESIGNED BY	KPB	DESIGN CK'D.	BMO	DRAWN BY	DTH	PLANS CK'D.	BMO

GENERAL PLAN

8

8

FILE NAME : S:\MAD\1200--1299\1275\027\Micros\PLAN\080301_gp.dgn

DRAFT

STATE PROJECT NUMBER
5849-02-02

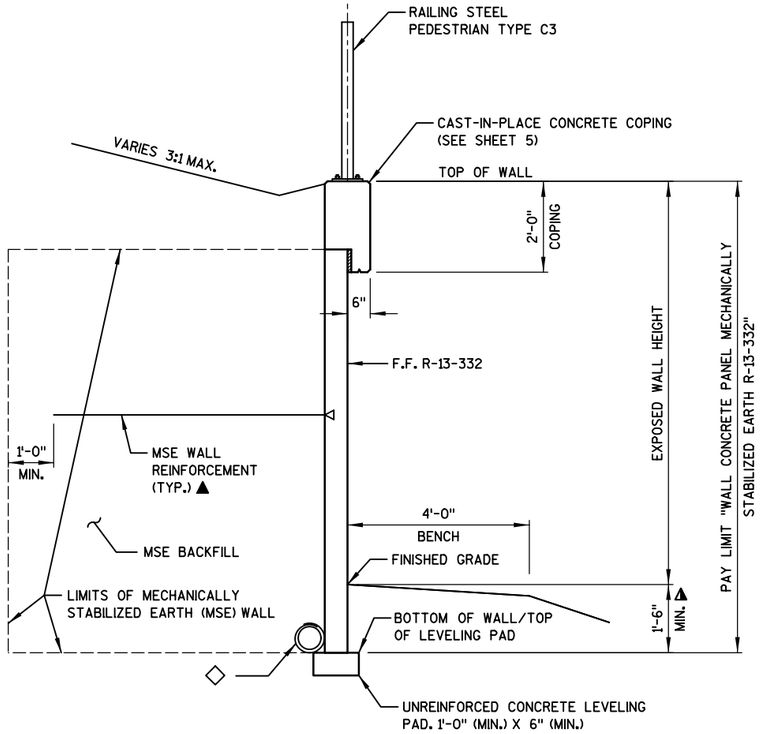

TYPICAL SECTION THRU MSE RETAINING WALL

(WALL STA. 10+00.00 TO 11+48.69)
(WALL STA. 11+70.82 TO 12+25.81)

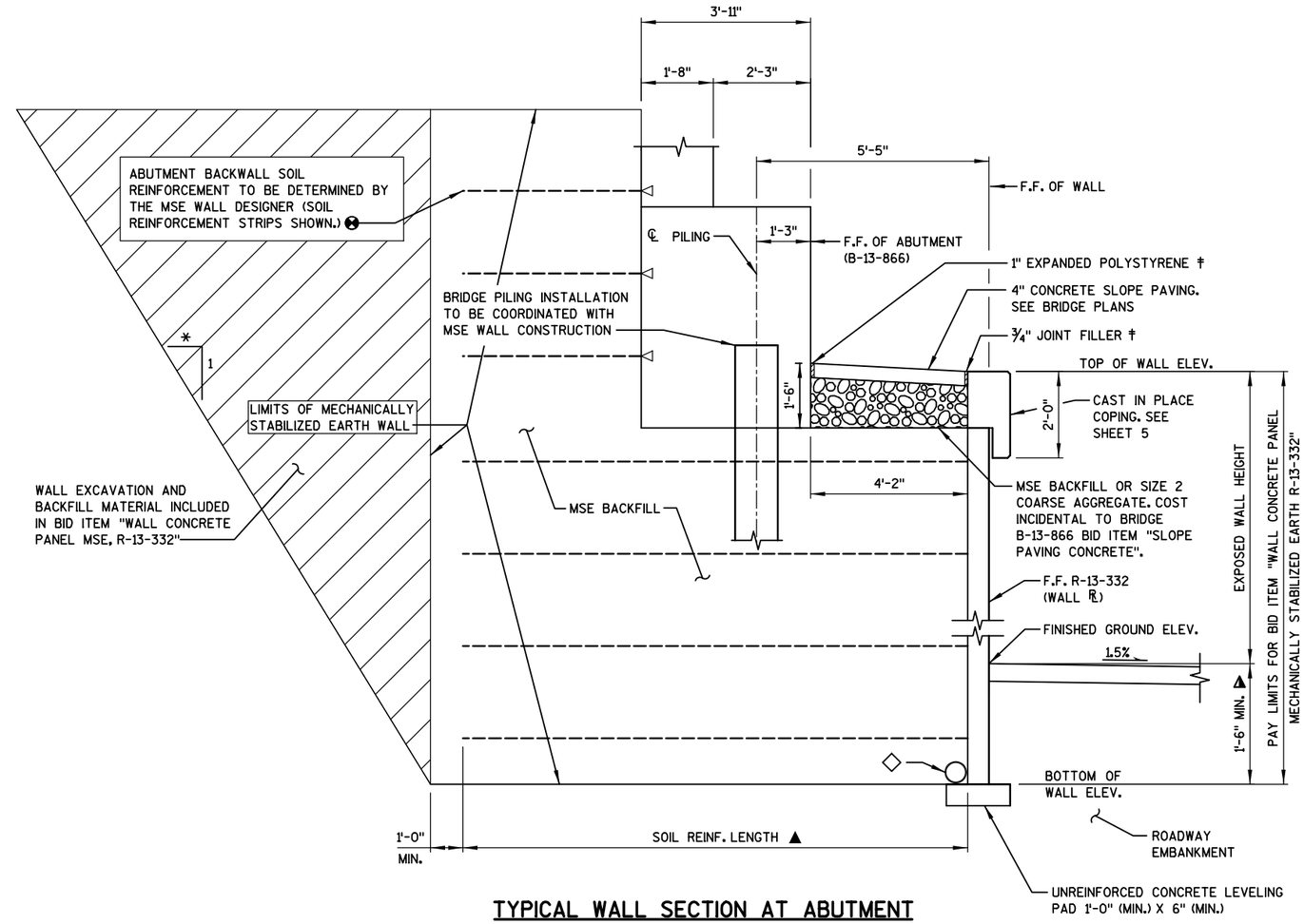

TYPICAL WALL SECTION AT ABUTMENT

(WALL STA. 11+48.69 TO 11+70.82)

LEGEND

▲ MINIMUM LENGTH OF MSE WALL REINFORCING STRIPS SHALL BE 70% OF THE TOTAL WALL HEIGHT (EXPOSED HEIGHT PLUS EMBEDMENT DEPTH) OR 8.0 FEET, WHICHEVER IS GREATER. SOIL REINFORCING MUST EXTEND A MINIMUM OF 3.0 FEET BEYOND THE FAILURE PLANE FOR INTERNAL STABILITY AS DEFINED BY AASHTO SPECIFICATIONS.

◇ PIPE UNDERDRAIN WRAPPED (6-INCH) SLOPE 0.5% MIN. TO CONNECT TO STRUCTURE B103.1.

⊗ UNACTORED SUPERSTRUCTURE LATERAL LOADS TRANSFERRED TO THE ABUTMENT ARE TAKEN TO BE KIPS PER FOOT OF ABUTMENT LENGTH. THE VALUES ARE TO BE USED FOR THE LRFD DESIGN OF THE ABUTMENT BACKWALL SOIL REINFORCEMENT BY THE MSE WALL MANUFACTURER. THE FOLLOWING AASHTO LINE LOADS SHALL BE INCLUDED IN THE WALL DESIGN:

BR = 0.23 KLF WS = 1.48 KLF
TU = 0.773 KLF WL = 0.00 KLF

THE ABUTMENT BACKWALL SOIL REINFORCEMENT AND CONNECTION TO THE ABUTMENT ARE INCLUDED WITH THE BID ITEM "ABUTMENT BACKWALL SOIL REINFORCEMENT" AS SHOWN ON THE B-13-866 BRDGE PLANS.

⚠ MINIMUM EMBEDMENT BASED ON SITE SPECIFIC PARAMETERS (1'-6" MINIMUM FOR ALL WALLS ON LEVEL GROUND). FIELD EMBEDMENT SHALL MEET OR EXCEED THE MINIMUM EMBEDMENT. FIELD EMBEDMENT BELOW MINIMUM EMBEDMENT SHALL NOT BE INCLUDED IN THE PAY LIMITS.

† SEAL ALL EXPOSED HORIZONTAL AND VERTICAL SUFRACES OF FILLER AND EXPANDED POLYSTYRENE WITH NON-STAINING, GRAY, NON-BITUMINOUS JOINT SEALER. (1" DEEP AND HOLD ⅛" BELOW SURFACE OF CONCRETE).

8

8

NO.	DATE	REVISION	BY

STATE OF WISCONSIN
DEPARTMENT OF TRANSPORTATION

STRUCTURE R-13-332

DRAWN BY DTH PLANS CK'D. BMO

WALL DETAILS

SHEET 2
270

DRAFT

STATE PROJECT NUMBER
5849-02-02

GEOMETRY TABLE

WALL STATION	TOP OF WALL COPING ELEV.	FINISHED GRADE ELEV.
10+00.00	1031.43	1031.13
10+25.00	1032.73	1030.82
10+50.00	1034.03	1030.50
10+75.00	1034.63	1030.17
11+00.00	1035.23	1029.83
11+25.00	1035.83	1022.71
11+35.27	1036.08	1019.79
11+48.69	1038.70	1019.80
11+48.69	1031.73	1019.80
11+50.00	1031.73	1019.80
11+70.82	1031.73	1019.86
11+70.82	1038.18	1019.86
11+75.00	1036.82	1036.80
12+00.00	1028.68	1028.66
12+25.81	1020.28	1020.28

WALL EXTERNAL & OVERALL STABILITY EVALUATION

DIMENSIONS	EVALUATED LOCATIONS			
WALL HEIGHT (FEET)[1]	5.27	7.69	18.30	13.97
EXPOSED WALL HEIGHT (FEET)	3.77	6.19	16.80	12.47
MINIMUM LENGTH OF REINFORCEMENT (FEET) ◪	8	8	13	16
WALL STATION	10+45.67	11+00.00	11+48.69	11+70.76
BORING USED	RW-5, BB-1, U-3			
CAPACITY TO DEMAND RATIO (CDR)[2,3]				
SLIDING (CDR>1.0)	2.0	1.4	1.3	1.0
ECCENTRICITY (CDR>1.0)	5.7	2.9	1.6	1.6
OVERALL STABILITY (CDR>1.0) ☆	--	--	--	1.3
BEARING RESISTANCE (CDR>1.0)	3.0	1.9	3.0	3.0
FACTORED BEARING RESISTANCE (PSF)	3600	3600	13400	15100

NOTES:
1. THE WALL HEIGHT INCLUDES AN EMBEDMENT OF 1.5 FT.
2. THE WALL STABILITY EVALUATION INCLUDED A SURCHARGE LOAD OF 100 PSF.
3. CDR VALUES ARE PRESENTED IN CHAPTER 14 OF THE WISDOT BRIDGE MANUAL.

* FINAL DESIGN FOR SLIDING, ECCENTRICITY, AND BEARING RESISTANCE IS THE RESPONSIBILITY OF THE CONTRACTOR'S WALL DESIGNER.

◪ THE LENGTHS PROVIDED IN THE TABLE ARE THE MINIMUM REQUIRED REINFORCEMENT LENGTH BASED UPON THE MINIMUM DESCRIBED IN THE WALL SYSTEM SPECIAL PROVISION OR EXTERNAL AND OVERALL STABILITY AT THE DESIGNATED LOCATIONS. THESE DESIGNATED LOCATIONS REPRESENT TYPICAL AND CRITICAL WALL LOCATIONS, BUT SHALL NOT BE CONSIDERED ALL INCLUSIVE. THE CONTRACTOR DESIGN LENGTHS SHALL MEET OR EXCEED THE MINIMUM VALUES REPRESENTED IN THE TABLE AT THESE DESIGNATED LOCATIONS.

☆ THE LENGTHS PROVIDED IN THE TABLE ARE THE MINIMUM REQUIRED REIINFORCEMENT LENGTHS BASED ON OVERALL STABILITY RERFORMED BY THE WALL DESIGNER COMPOUND STABILITY IS THE CONTRACTOR'S RESPONSIBILITY.

NOTES:
1. THE PROJECT SOILS ENGINEER SHOULD REVIEW THE SUBSURFACE CONDITIONS PRIOR TO CONSTRUCTION OF THE WALLS TO DETERMINE IF THE SOILS HAVE THE MINIMUM BEARING STRENGTH SHOWN IN THE TABLE ABOVE.
2. FINAL DESIGN FOR SLIDING, ECCENTRICITY, AND BEARING RESISTANCE AT OTHER WALL STATIONS IS THE RESPONSIBILITY OF THE CONTRACTOR'S WALL DESIGNER.

SOIL PARAMETERS

STRATUM LOCATIONS & SOIL DESCRIPTIONS	TOTAL UNIT WEIGHT	FRICTION ANGLE (DEGREES)	COHESION (PSF)
GRANULAR BACKFILL (REINFORCING ZONE OR BACKFILL	120	30	0
GRANULAR RETAINED SOIL *	135	30	0
BOR BB-1			
LEAN CLAY ELEV 1031.3-1029.8	130	0	1,000
LEAN CLAY ELEV 1029.8-1025.8	135	0	1,500
POORLY-GRADED SAND WITH GRAVEL AND COBBLES ELEV 1025.8-1021.3	130	38	0
SILTY SAND WITH GRAVEL, COBBLES, AND BOULDERS ELEV 1021.3-1012.3	135	34	0
SANDSTONE ELEV 1012.3-1009.3	120	0	72,000 (TOP) 144,000 (BOTTOM)
SANDSTONE ELEV 1009.3-997.7			144,000 (TOP) 288,000 (BOTTOM)
BOR BB-2			
LEAN CLAY ELEV 1019.5-1019.0	130	0	1,000
LEAN CLAY ELEV 1019.0-1016.5	130	0	1,500
LEAN CLAY ELEV 1016.5-1014.0	130	0	1,400
LEAN CLAY ELEV 1014.0-1011.5	135	0	1,200
SILTY SAND WITH GRAVEL, COBBLES, AND BOULDERS ELEV 1011.5-1009.0	135	33	0
SILTY SAND WITH GRAVEL, COBBLES, AND BOULDERS ELEV 1009.0-996.5	135	34	0
POORLY-GRADED GRAVEL WITH SAND AND COBBLES ELEV 996.5-991.5	135	41	0
SILTY SAND WITH GRAVEL, COBBLES, AND BOULDERS ELEV 991.5-989.5	135	31	0
POORLY-GRADED SAND WITH GRAVEL ELEV 989.5-982.5	135	43	0
POORLY-GRADED SAND WITH GRAVEL ELEV 982.5-980	135	38	0
POORLY-GRADED SAND WITH GRAVEL ELEV 980.0-970.5	135	43	0
SANDSTONE ELEV 970.5-965.5	120	0	72000 (TOP) 144,000 (BOTTOM)
BOR RW-5			
LEAN CLAY ELEV 1035.9-1034.9	130	0	1,000
LEAN CLAY ELEV 1034.9-1029.4	135	0	1,700
SILTY SAND WITH GRAVEL AND COBBLES ELEV 1029.4-1027.9	135	33	0
SILTY SAND WITH GRAVEL AND COBBLES ELEV 1027.9-1023.9	135	40	0
SILTY SAND WITH GRAVEL, COBBLES, AND BOULDERS ELEV 1023.9-1016.9	135	34	0
SANDSTONE ELEV 1016.9-1013.9	120	38	0
SANDSTONE ELEV 1013.9-1007.2	120	45	0
BOR U-1			
LEAN CLAY ELEV 1019.1-1018.9	115	0	500
POORLY-GRADED GRAVEL ELEV 1018.9-1018.4	110	29	0
GRAVELLY LEAN CLAY ELEV 1018.4-1017.9	120	0	1,000
SANDY SILTY CLAY WITH GRAVEL ELEV 1017.9-1013.1	130	0	2,000
SILTY SAND WITH GRAVEL, COBBLES, AND BOULDERS ELEV 1013.1-1011.1	128	29	0
SILTY SAND WITH GRAVEL, COBBLES, AND BOULDERS ELEV 1011.1-1002.1	135	35	0
SILTY SAND WITH GRAVEL, COBBLES, AND BOULDERS ELEV 1002.1-996.6	135	34	0
LEAN CLAY ELEV 996.6-991.6	135	0	3,700
POORLY-GRADED SAND ELEV 991.6-989.1	120	35	0
BOR U-2			
LEAN CLAY ELEV 1020.6-1020.4	115	0	500
SILTY SAND WITH GRAVEL ELEV 1020.4-1017.1	130	36	0
LEAN CLAY ELEV 1017.1-1014.6	135	0	3,300
SILTY SAND WITH GRAVEL AND COBBLES ELEV 1014.6-1007.6	135	35	0
SANDY LEAN CLAY WITH GRAVEL AND COBBLES ELEV 1007.6-996.5	135	0	4,100
SANDY LEAN CLAY WITH GRAVEL AND COBBLES ELEV 996.5-990.7	135	0	4,100
BOR U-3			
ASPHALT ELEV 1019.8-1019.7	145	--	--
SILTY GRAVEL WITH SAND ELEV 1019.7-1017.3	135	37	0
POORLY-GRADED SAND WITH SILT AND GRAVEL ELEV 1017.3-1015.8	120	33	0
SILTY SAND WITH GRAVEL AND COBBLES ELEV 1015.8-1008.8	135	40	0
CLAYEY SAND WITH GRAVEL AND COBBLES ELEV 1008.8-1001.2	135	33	0
SANDSTONE ELEV 1001.2-996.5	120	45	0
SANDSTONE ELEV 996.5-991.1	120	45	0

8

8

NO.	DATE	REVISION	BY

STATE OF WISCONSIN
DEPARTMENT OF TRANSPORTATION

STRUCTURE R-13-332

DRAWN BY DTH PLANS CK'D. BMO

DESIGN TABLE

SHEET 3
271

FILE NAME : S:\MAD\1200--1299\1275\027\Micros\PLAN\080303_cd.dgn

DRAFT

STATE PROJECT NUMBER

5849-02-02

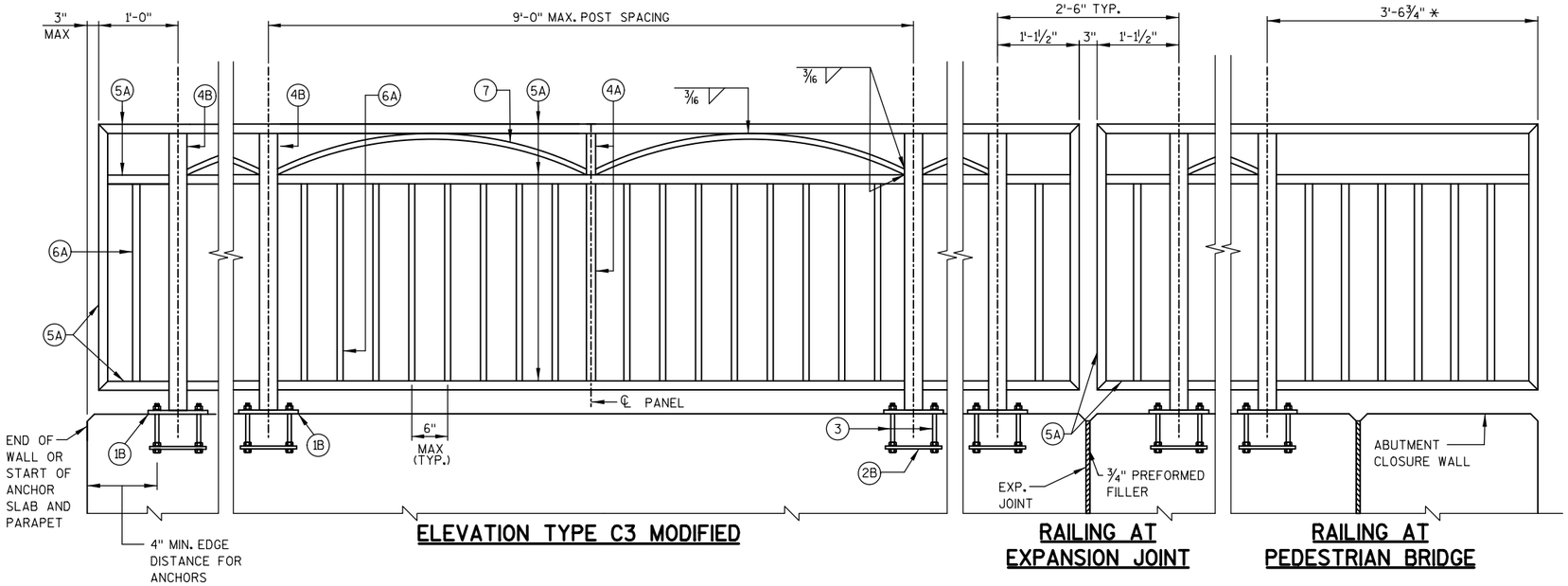

ELEVATION TYPE C3 MODIFIED

RAILING AT EXPANSION JOINT

RAILING AT PEDESTRIAN BRIDGE

LEGEND

(1B) PLATE ⅝" X 6" X 10" WITH ¾" X 1½" SLOTTED HOLES

(2B) ¼" X 5" X 9" ANCHOR PLATE WITH 11/16" ϕ HOLES FOR THR'D. RODS NO. 3.

(3) ⅝" DIA. X 9" LONG, TYPE 316 STAINLESS STEEL THREADED RODS (MIN. TENSILE STRENGTH = 70 KSI) WITH NUT AND WASHERS OF SAME ALLOY GROUP. ALTERNATE ANCHORAGE: CONCRETE ADHESIVE ANCHORS ⅝-INCH. EMBED 7" IN CONCRETE FOR RAIL POSTS. EMBED 5" IN CONCRETE FOR END RAILS. ADHESIVE ANCHORS SHALL CONFORM TO SECTION 502.2.12 OF THE STANDARD SPECIFICATIONS.

(4A) STRUCTURAL TUBING 3" X 1½" X 3/16". PLACE VERTICAL. WELD TO NO. 1 & 5.

(4B) STRUCTURAL TUBING 3" X 3" X 3/16". PLACE VERTICAL. WELD TO NO. 1 & 5.

(5A) STRUCTURAL TUBING 3" X 1½" X 3/16" RAILS. WELD TO NO. 1 & NO. 4. INSIDE OF TUBE TO BE PAINTED AT ALL FIELD ERECTION JOINTS.

(6A) BAR 1" X 1" PICKETS. WELD TO NO. 5. (SPACE AT 6" MAX ℄ TO ℄ SPACING). PLACE VERTICAL.

(7) BAR 1" X 1". BEND TO REQUIRED RADIUS. WELD TO NO. 4 & 5.

(9A) RECTANGULAR SLEEVE FABRICATED FROM 3/16" PLATES. PROVIDE "SLIDING FIT".

(10A) RECTANGULAR SLEEVE FABRICATED FROM 3/16" PLATES. (1'-4" @ FIELD ERECTION JTS.)

* DIMENSION CALCULATED ASSUMING 16'-8" OUT-TO-OUT WIDTH OF STEEL TRUSS PEDESTRIAN BRIDGE. DIMENSION SHALL BE VERIFIED DURING CONSTRUCTION TO PROVIDE >6" GAP BETWEEN END OF RAILING AND STEEL TRUSS.

RAILING NOTES

BID ITEM SHALL BE "RAILING STEEL TYPE C3 GALVANIZED PEDESTRIAN R-13-264", WHICH SHALL INCLUDE ALL STEEL ITEMS SHOWN.

POST BASE PLATES SHALL BE FLAT WITH ALL SURFACES SMOOTH AND FREE FROM WARP AND ALL EDGES SMOOTH, STRAIGHT AND VERTICAL. ALL PLATE CUTS SHALL BE MACHINE OR MACHINE FLAME CUTS.

ALL PLATES, BARS, AND RECTANGULAR SLEEVES SHALL CONFORM TO ASTM A709 GRADE 36. ALL STRUCTURAL TUBING SHALL CONFORM TO ASTM A500 GRADE B.

ANCHORAGES SHALL BE ACCURATELY PLACED TO PROVIDE CORRECT ALIGNMENT OF RAILING. SET NORMAL TO GRADE.

CUT BOTTOM OF POST TO MAKE POST VERTICAL IN BOTH TRANSVERSE AND LONGITUDINAL DIRECTION.

STEEL SHIMS SHALL BE PROVIDED & USED UNDER BASE PLATES WHERE REQUIRED FOR ALIGNMENT, AND SHALL BE GALVANIZED.

CAULK AROUND PERIMETER OF BASE PLATES, NO. 1, AND FILL BOLT SLOT OPENINGS IN SHIMS AND BASE PLATES WITH NON-STAINING GRAY NON-BITUMINOUS JOINT SEALER.

ALL MATERIAL (EXCEPT NO. 3) SHALL BE GALVANIZED AFTER FABRICATION. PRIOR TO GALVANIZING, THE STEEL RAILING SHALL BE GIVEN A NO. 6 BLAST CLEANING PER SSPC SPECIFICATIONS. PAINT OVER GALVANIZING WITH AN APPROVED TIE COAT AND TOP COAT AS SPECIFIED IN THE SPECIAL PROVISIONS. THE RAILING SHALL BE PAINTED FEDERAL COLOR NO. 14090 (GREEN).

VENT HOLES SHALL BE DRILLED IN POST AND RAIL MEMBERS AS REQUIRED TO FACILITATE GALVANIZING AND DRAINAGE.

RAILING SHALL BE FABRICATED IN LENGTHS THAT INCLUDE 3 OR 4 POSTS.

TOUCH-UP PAINTING TO BE DONE AT COMPLETION OF STEEL RAILING INSTALLATION TO THE SATISFACTION OF THE ENGINEER AT NO EXTRA COST.

COORDINATE POST LAYOUT WITH MSE WALL COPING EXPANSION JOINT LAYOUT.

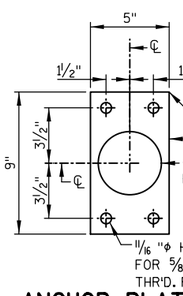

ANCHOR PLATE

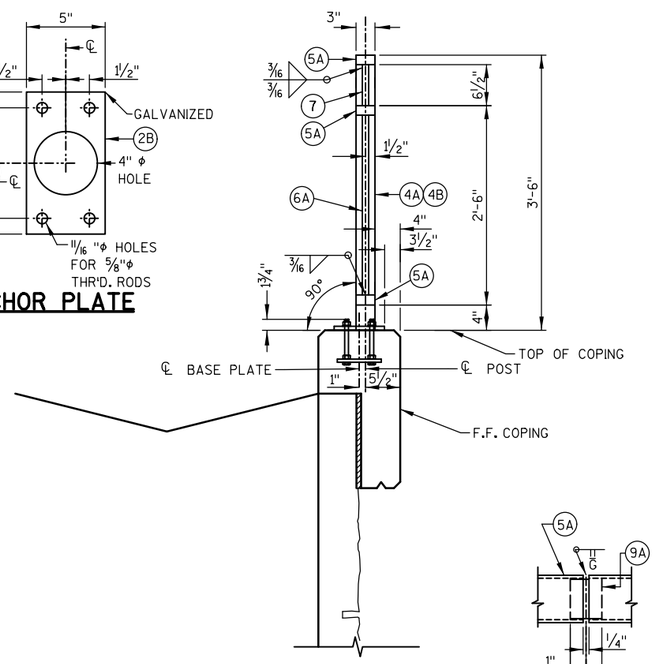

SECTION THRU RAILING

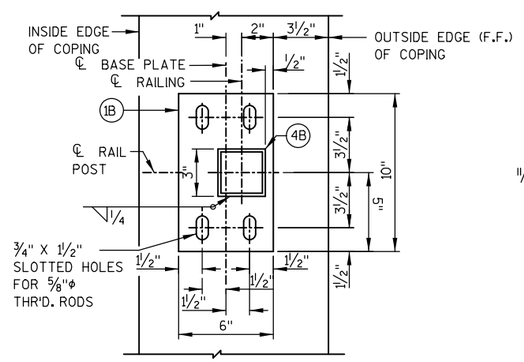

TYPICAL RAIL POST BASE PLATE

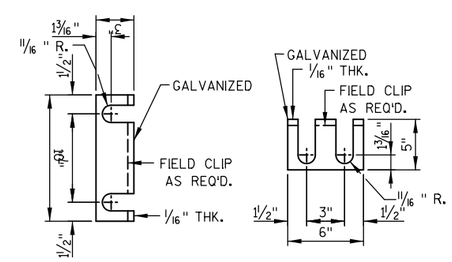

RAIL POST SHIM DETAIL

(2 SETS PER POST)

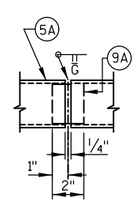

SHOP RAIL SPLICE DETAIL

(LOCATION MUST BE SHOWN ON SHOP DRAWINGS)

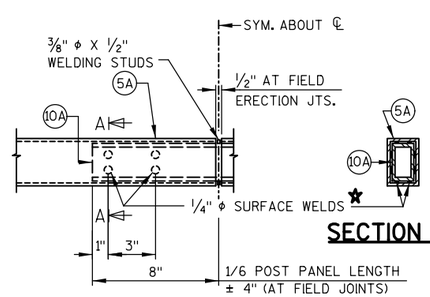

FIELD ERECTION JOINT DETAIL

★ MIN. ⅝" FLAT SURFACE DIA. PUNCHINGS OR STUDS MAY BE USED AS AN ALTERNATE.

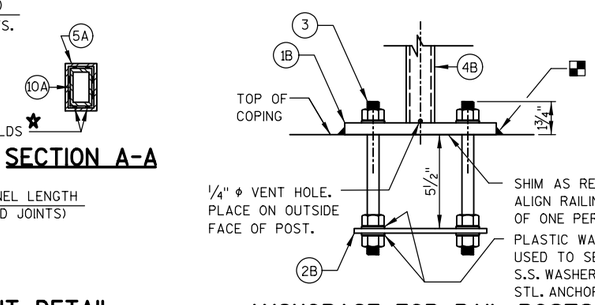

ANCHORAGE FOR RAIL POSTS

NOTE: ANCHOR PLATE NOT REQUIRED WHEN TYPE S ANCHORS ARE USED.

NO.	DATE	REVISION	BY

STATE OF WISCONSIN
DEPARTMENT OF TRANSPORTATION

STRUCTURE R-13-332

DRAWN BY DTH | PLANS CK'D. BMO

RAILING DETAILS

SHEET 4 272

8

8

FILE NAME : S:\MAD\1200--1299\1275\027\Micros\PLAN\080304_cd.dgn

DRAFT

STATE PROJECT NUMBER
5849-02-02

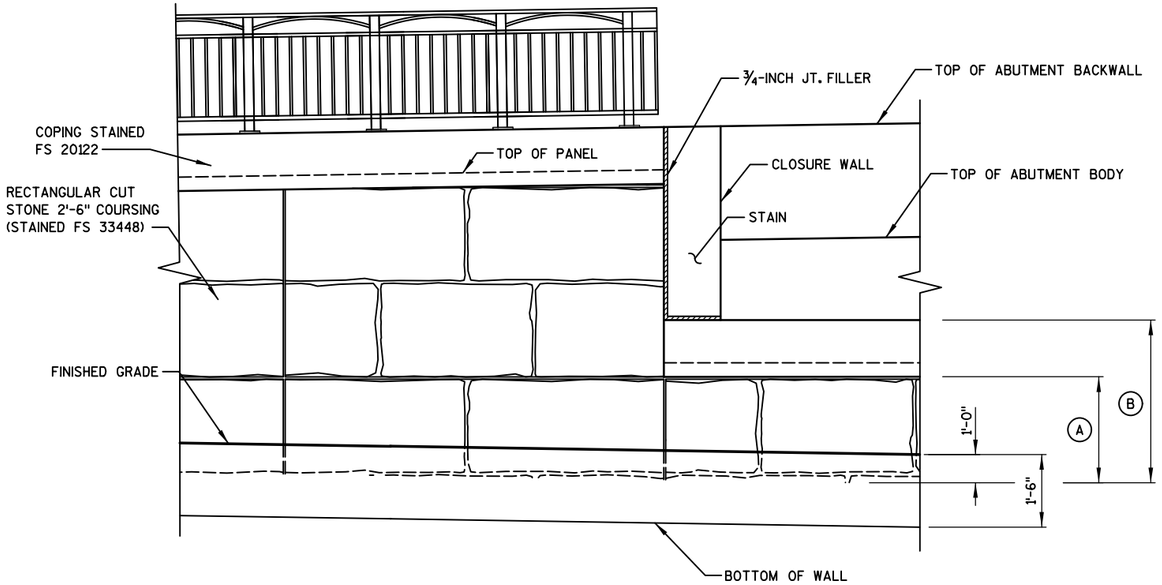

FORMLINER DETAILS

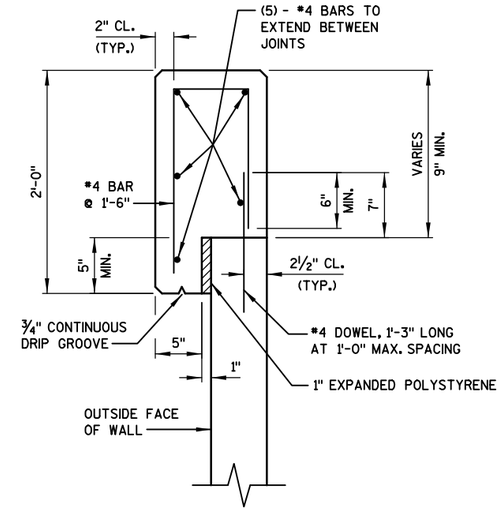

CAST-IN-PLACE CONCRETE COPING DETAIL

NOTE:
CONCRETE COPING REINFORCING STEEL SHALL BE DESIGNED AT LOCATIONS WHERE RAILING, FENCING, OR ANY OTHER ATTACHMENTS ARE MADE.

NOTES:

PROVIDE AESTHETIC DETAILS SHOWN IN THIS PLAN AND AS NOTED IN THE SPECIAL PROVISIONS.

ALL STONE EDGES ADJACENT TO HORIZONTAL PANEL JOINTS SHALL BE CUT STONE TEXTURE.

ALL STONE EDGES ADJACENT TO VERTICAL PANEL JOINTS SHALL BE FLUSH CUT.

AVERAGE RELIEF IS ¾" FOR THE STONES WITH A MAXIMUM RELIEF OF 2" FOR THE JOINTS.

ALL PANELS ARE TO BE STAINED PER DETAILS ON THIS SHEET.

ALL EXPOSED SURFACES OF FORMLINED BLOCKS TO BE SPLIT FACE INCLUDING FACES, CORNERS AND EDGES.

FORMLINER COURSING SHALL BE LEVEL AND CONTINUOUS ACROSS VERTICAL PANEL JOINTS.

(A) PAY LIMITS FOR "ARCHITECTURAL SURFACE TREATMENT" (BOTTOM OF COPING TO 1' BELOW FINISHED GRADE)

(B) PAY LIMITS FOR "CONCRETE STAINING" (TOP OF COPING TO 1' BELOW FINISHED GRADE)

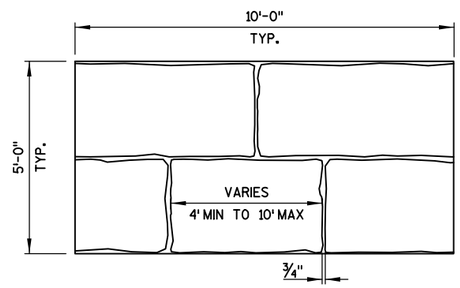

TYPICAL PANEL DETAILS

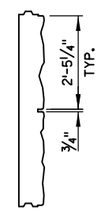

TYPICAL PANEL CROSS SECTION

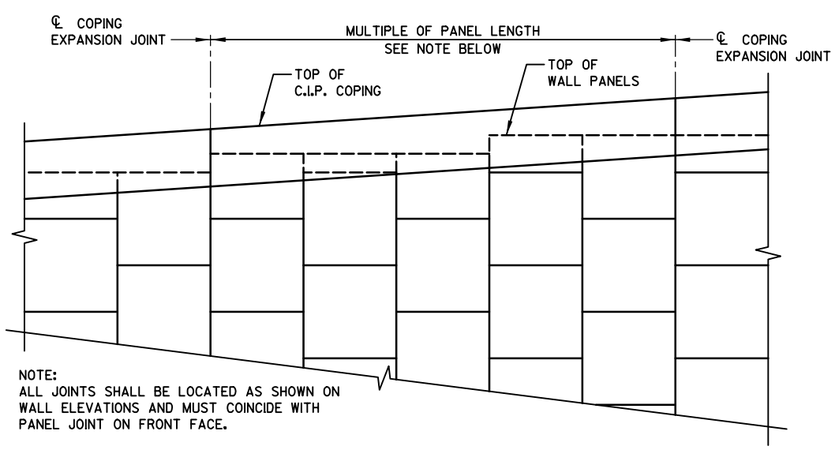

NOTE:
ALL JOINTS SHALL BE LOCATED AS SHOWN ON WALL ELEVATIONS AND MUST COINCIDE WITH PANEL JOINT ON FRONT FACE.

C.I.P. COPING PARTIAL ELEVATION

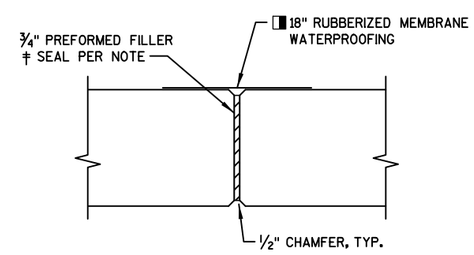

COPING EXPANSION JOINT

DO NOT RUN BAR STEEL THRU JOINT.
MAX. SPACING OF JOINT = 50'

◨ MEMBRANE WATERPROOFING TO EXTEND FROM TOP OF COPING TO 6" BELOW TOP OF PANELS. MEMBRANE WATERPROOFING INCLUDED IN BID ITEM "WALL CONCRETE PANEL MECHANICALLY STABILIZED EARTH LFRD R-13-332".

‡ SEAL ALL EXPOSED HORIZ. & VERT. SURFACES OF FILLER WITH NON-STAINING GRAY NON-BITUMINOUS JOINT SEALER. (1" DEEP AND HOLD ⅛" BELOW SURFACE OF CONCRETE.)

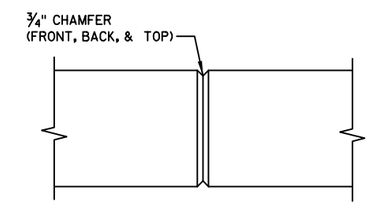

COPING CONTRACTION JOINT

DO NOT RUN BAR STEEL THRU JOINT. MAX. SPACING OF JOINT = 12'. SET JOINT LOCATION TO ALIGN WITH PANEL JOINT BELOW.

NO.	DATE	REVISION	BY

STATE OF WISCONSIN
DEPARTMENT OF TRANSPORTATION

STRUCTURE R-13-332

DRAWN BY DTH | PLANS CK'D.

AESTHETIC & COPING DETAILS

SHEET 273

8

8

FILE NAME : S:\MAD\1200--1299\1275\027\Micros\PLAN\080305_cd.dgn

BORINGS PERFORMED AND REPORT COMPLETED BY:
SOILS & ENGINEERING SERVICES, INC. (SES)
1102 STEWART STREET
MADISON, WI 53713

BORINGS WERE PERFORMED ON 11/27/2017
AND 01/09/2019.

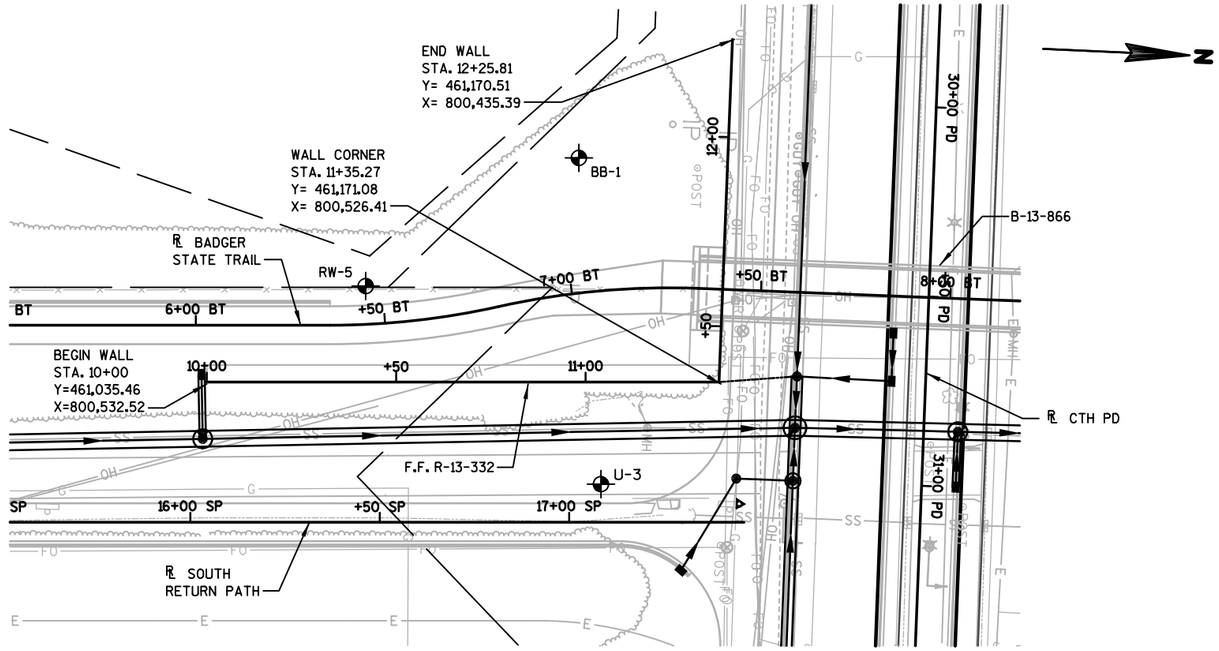

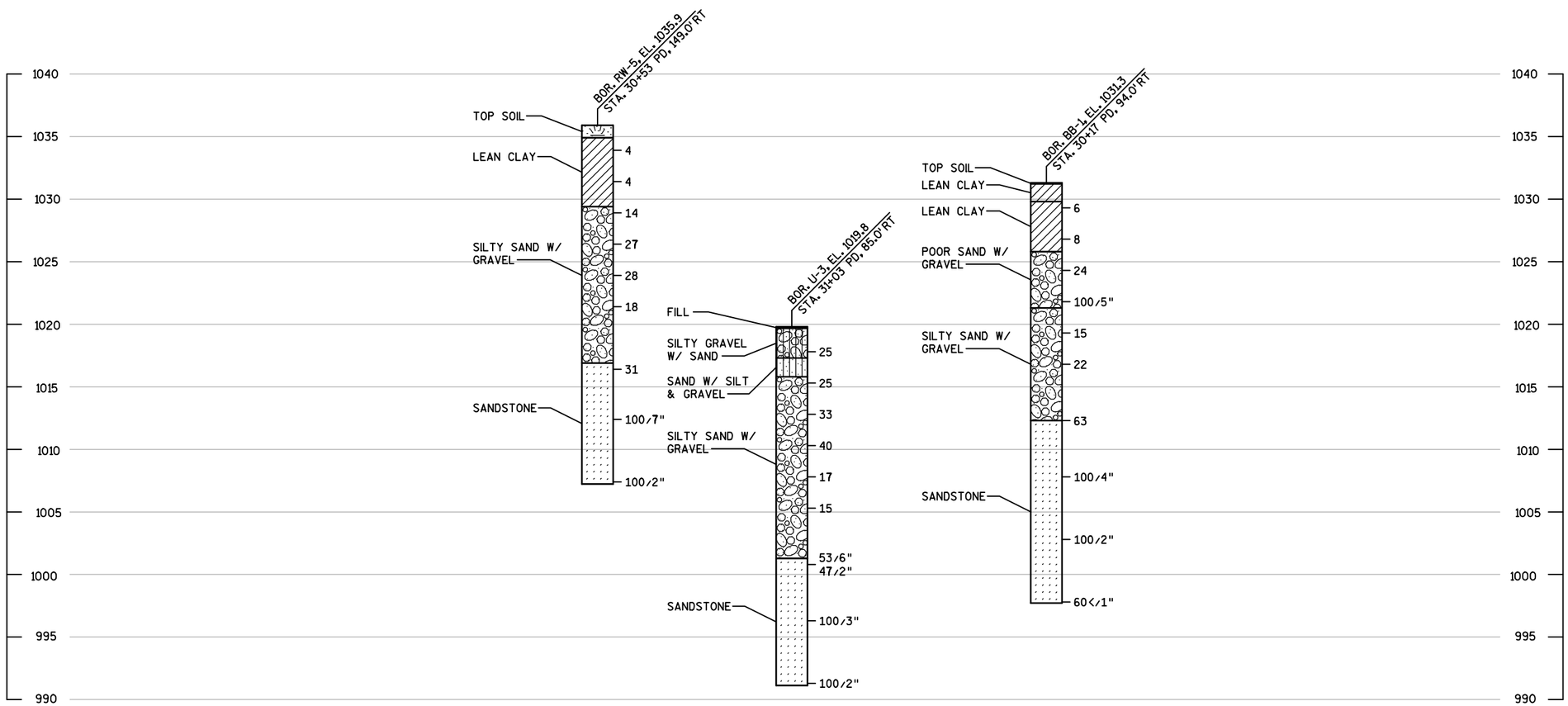

STATE PROJECT NUMBER

DRAFT

5843-02-02

MATERIAL SYMBOLS

ASPHALT	TOPSOIL	PEAT
CONCRETE	FILL	GRAVEL
SAND	CLAY	SILT
BOULDERS OR COBBLES	LIMESTONE	BEDROCK (UNKNOWN)
SHALE	SANDSTONE	IGNEOUS/ META

LEGEND OF BORING

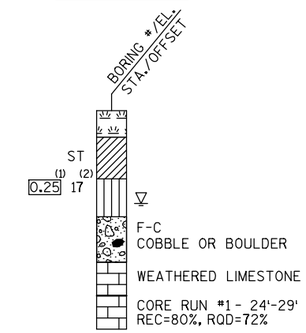

(1) UNCONFINED STRENGTH, AS DETERMINED BY A POCKET PENETROMETER (TSF)

(2) UNLESS OTHERWISE, SPECIFIED THE SPT 'N' VALUE IS BASED ON AASHTO T-206, STANDARD PENETRATION TEST. THE SPT 'N' VALUE PRESENTED HAS NOT BEEN CORRECTED FOR OVERBURDEN PRESSURE OR HAMMER EFFICIENCY.

GROUND WATER ELEVATION

- AT TIME OF DRILLING
- END OF DRILLING
- AFTER DRILLING

ABBREVIATIONS

F-FINE M-MEDIUM C-COARSE ST-SHELBY TUBE

SUBSURFACE EXPLORATION FOR FOUNDATION DESIGN AND BIDDERS INFORMATION

BORINGS WERE COMPLETED AT POINTS APPROXIMATELY AS INDICATED ON THIS DRAWING TO OBTAIN INFORMATION CONCERNING THE CHARACTER OF SUBSURFACE MATERIALS FOUND AT THE SITE. BECAUSE THE INVESTIGATED DEPTHS ARE LIMITED AND THE AREA OF THE BORINGS IS VERY SMALL IN RELATION TO THE ENTIRE SITE, THE WISCONSIN DEPARTMENT OF TRANSPORTATION DOES NOT WARRANT SIMILAR SUBSURFACE CONDITIONS BELOW, BETWEEN, OR BEYOND THESE BORINGS. VARIATIONS IN SOIL CONDITIONS SHOULD BE EXPECTED AND FLUCTUATIONS IN GROUNDWATER LEVELS MAY OCCUR.

8

NO.	DATE	REVISION	BY

STATE OF WISCONSIN
DEPARTMENT OF TRANSPORTATION
STRUCTURES DESIGN SECTION

STRUCTURE B-13-332

DRAWN BY DTH PLANS CK'D. BMO

SUBSURFACE EXPLORATION

SHEET 6
274

SCALE =

FILE NAME : S:\MAD\1200--1299\1275\027\Micros\PLAN\080306_sx.dgn

DRAFT

STATE PROJECT NUMBER
~~5649~~-02-02

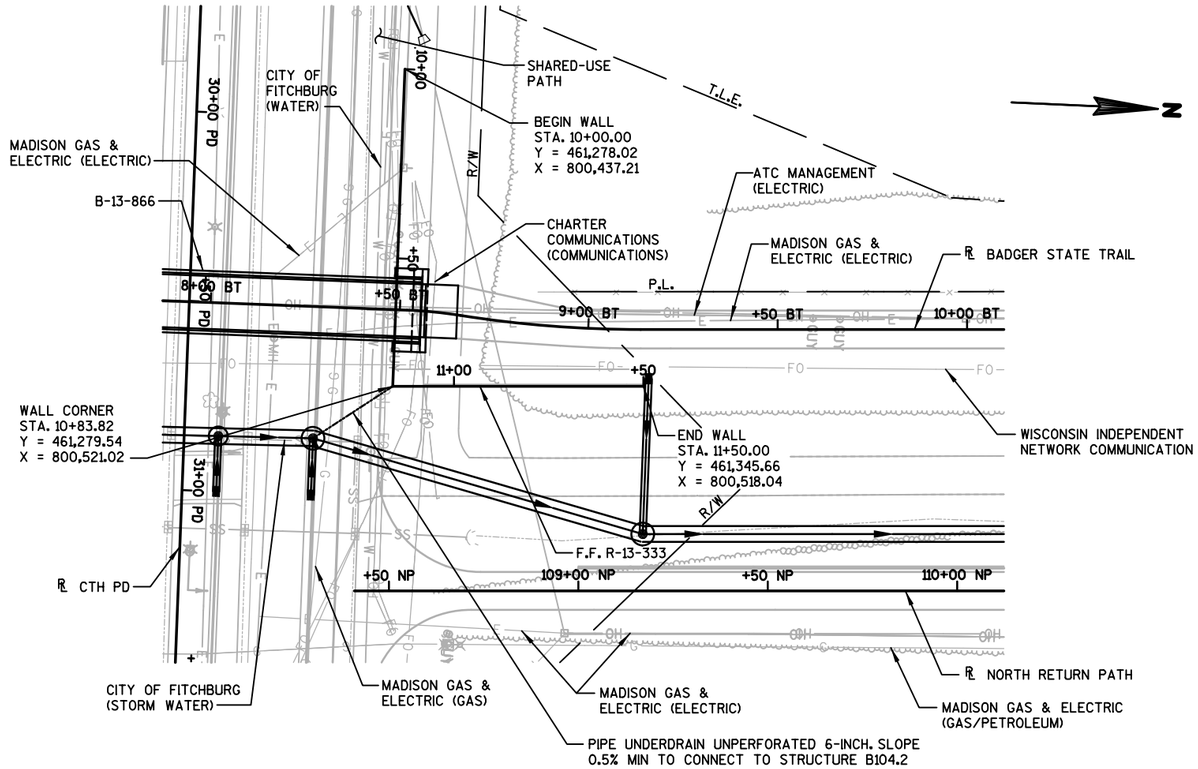

PLAN

(CONCRETE PANEL MECHANICALLY STABILIZED EARTH WALL)

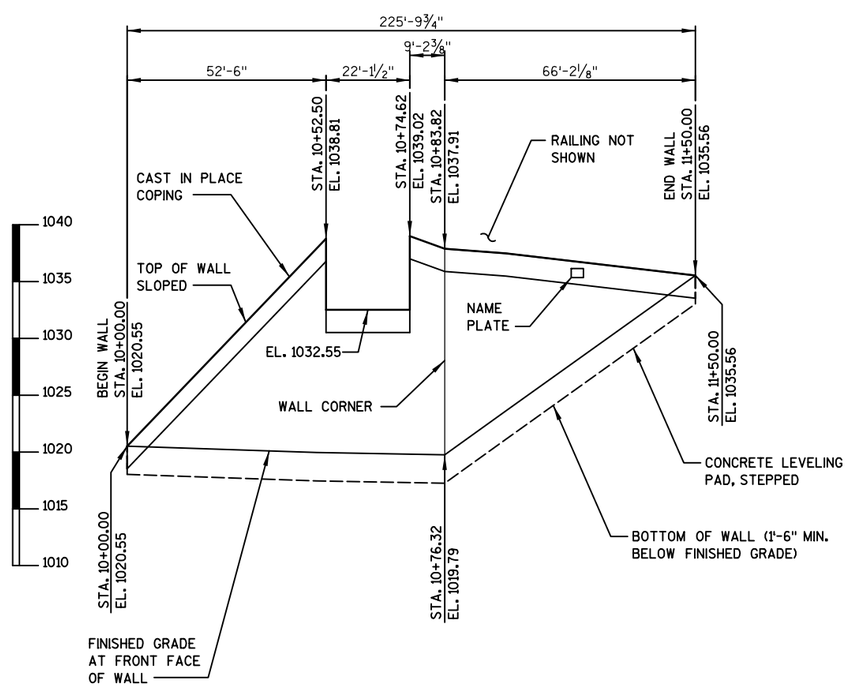

ELEVATION

(LOOKING AT F.F. OF WALL)

1. CONCRETE PANEL MECHANICALLY STABILIZED EARTH LRFD.

ALLOWABLE WALL SYSTEMS

1. CONCRETE PANEL MECHANICALLY STABILIZED EARTH LRFD.

LIST OF DRAWINGS

1. GENERAL PLAN
2. TYPICAL SECTIONS
3. DESIGN TABLES
4. RAILING DETAILS
5. AESTHETIC & COPING DETAILS
6. SUBSURFACE EXPLORATION

GENERAL NOTES

DRAWINGS SHALL NOT BE SCALED.

THE PLAN QUANTITY FOR THE BID ITEM "WALL CONCRETE PANEL MECHANICALLY STABILIZED EARTH LRFD R-13-333 IS BASED ON A WALL HEIGHT MEASURED FROM THE TOP OF WALL TO A CONSTANT DEPTH OF 1'-6" BELOW FINISHED GRADE.

ALL DIMENSIONS, STATIONING, AND OFFSETS ARE ALONG THE FRONT FACE OF WALL AT FINISHED GROUND, UNLESS OTHERWISE SHOWN.

A NAME PLATE SHALL BE PLACED AS DIRECTED BY THE ENGINEER. CENTER NAME PLATE ON COPING.

ALL BAR STEEL REINFORCEMENT IN CAST-IN-PLACE CONCRETE IS TO BE EPOXY COATED.

BAR STEEL REINFORCEMENT SHALL BE EMBEDDED 2-INCHES CLEAR UNLESS OTHERWISE SHOWN OR NOTED.

BEVEL EXPOSED EDGES OF CONCRETE ¾-INCH, UNLESS NOTED OTHERWISE.

DESIGN DATA

THE CONTRACTOR SHALL PROVIDE COMPLETE DESIGN, PLANS, DETAILS, SPECIFICATIONS, AND SHOP DRAWINGS FOR THE RETAINING WALLS IN ACCORDANCE WITH THE SPECIAL PROVISIONS. THE RETAINING WALL MANUFACTURER SHALL PROVIDE TECHNICAL ASSISTANCE TO THE CONTRACTOR DURING CONSTRUCTION. THE COST OF FURNISHING THESE ITEMS SHALL BE INCLUDED IN THE BID ITEM "WALL CONCRETE PANEL MECHANICALLY STABILIZED EARTH LRFD R-13-333."

PLANS, ELEVATIONS AND DETAILS SHOWN ON THESE DRAWINGS ARE INTENDED TO INDICATE WALL LOCATIONS, LENGTHS, HEIGHTS, AND DETAILS COMMON TO THE WALL SYSTEM SELECTED. THE CONTRACTOR SHALL VERIFY THAT THE WALL SYSTEM SELECTED WILL CONFORM TO THE REQUIRED ALIGNMENTS AND DETAILS.

THE RETAINING WALL IS TO BE DESIGNED USING THE ELEVATIONS GIVEN ON THIS SHEET.

DESIGN FOR RETAINING WALL TO PROVIDE FOR FINISHED GRADE SLOPED BEHIND WALL AS SHOWN ON THE TYPICAL WALL SECTION AND ROADWAY CROSS SECTIONS.

DESIGN RETAINING WALL FOR A LIVE LOAD SURCHARGE OF 100 PSF.

THE MAXIMUM VALUE OF THE ANGLE OF INTERNAL FRICTION OF THE WALL BACKFILL MATERIAL SHALL BE ASSUMED TO BE 30° WITHOUT CERTIFIED TEST VALUES.

ULTIMATE DESIGN STRESSES

CONCRETE MASONRY, COPING _____ f'c = 3,500 PSI
HIGH STRENGTH BAR STEEL REINFORCEMENT, GRADE 60 _____ fy = 60,000 PSI

BENCHMARKS

NO.	STATION	DESCRIPTION	ELEV.
1	27+19.42 PD, 75.02' LT	TOP NUT OF FIRE HYDRANT	1027.67
2	30+51.62 PD, 52.85' LT	TOP NUT OF FIRE HYDRANT	1022.34
3	34+53.47 PD, 53.87' LT	TOP NUT OF FIRE HYDRANT	1024.46

TOTAL ESTIMATED QUANTITIES

BID ITEM	BID ITEMS	UNIT	TOTALS
209.1500	BACKFILL GRANULAR GRADE 2	TON	1020
513.8016	RAILING STEEL PEDESTRIAN TYPE C3	LF	125
517.1010.S.XX	CONCRETE STAINING R-13-333	SF	1360
517.1050.S.XX	ARCHITECTURAL SURFACE TREATMENT R-13-333	SF	1610
612.0206	PIPE UNDERDRAIN UNPERFORATED 6-INCH	LF	35
612.0406	PIPE UNDERDRAIN WRAPPED 6-INCH	LF	125
SPV.0165.XX	WALL CONCRETE PANEL MECHANICALLY STABILIZED EARTH LRFD R-13-333	SF	1680
	NON-BID ITEMS		
	PREFORMED FILLER	SIZE	3/4"
	EXPANDED POLYSTYRENE	SIZE	1"

ALL ITEMS ARE CATEGORY 0060

DESIGN CONSULTANT CONTACT:
KYLE BETH (608) 251-4843

BRIDGE OFFICE CONTACT:
WILLIAM DREHER (608) 266-8489

NO.	DATE	REVISION	BY

STRAND ASSOCIATES®
910 WEST WINGRA DRIVE
MADISON, WISCONSIN 53715
(608)-251-4843
(608) 251-8655 FAX
WWW.STRAND.COM

STATE OF WISCONSIN
DEPARTMENT OF TRANSPORTATION

ACCEPTED _____ _____
CHIEF STRUCTURES DESIGN ENGINEER DATE

STRUCTURE R-13-333

RET. WALL AT MCKEE RD. AND BADGER ST. TRAIL

COUNTY DANE | ~~TOWN~~/CITY/~~VILLAGE~~ FITCHBURG

DESIGN SPEC. AASHTO LRFD BRIDGE DESIGN SPECIFICATIONS

DESIGNED BY KPB | DESIGN CK'D. BMO | DRAWN BY DTH | PLANS CK'D. BMO

GENERAL PLAN

8

8

FILE NAME : S:\MAD\1200--1299\1275\027\Micros\PLAN\080401_gp.dgn

DRAFT

STATE PROJECT NUMBER
5849-02-02

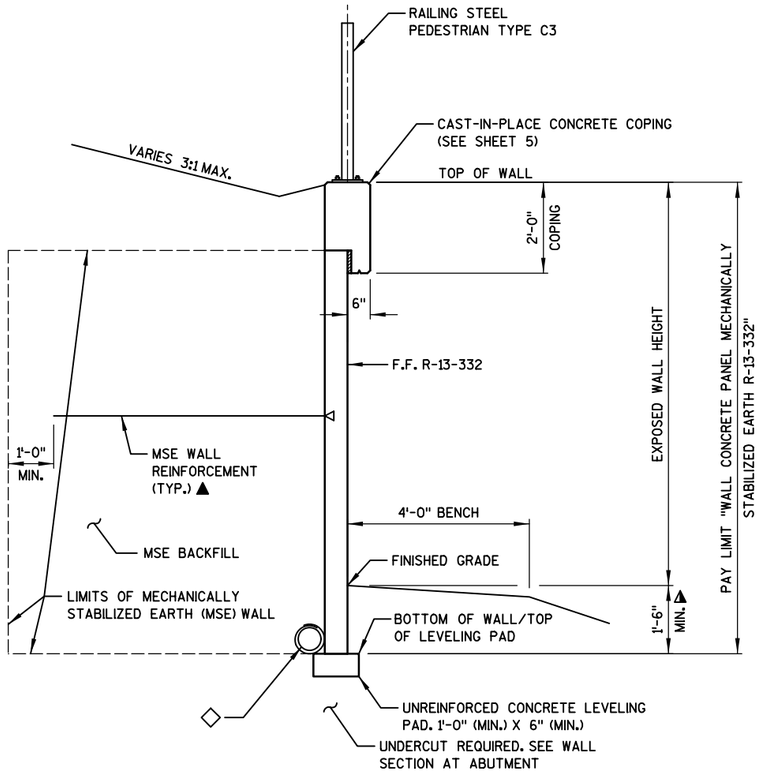

TYPICAL SECTION THRU MSE RETAINING WALL

(WALL STA. 10+00.00 TO 10+52.50)
(WALL STA. 10+74.62 TO 11+50.00)

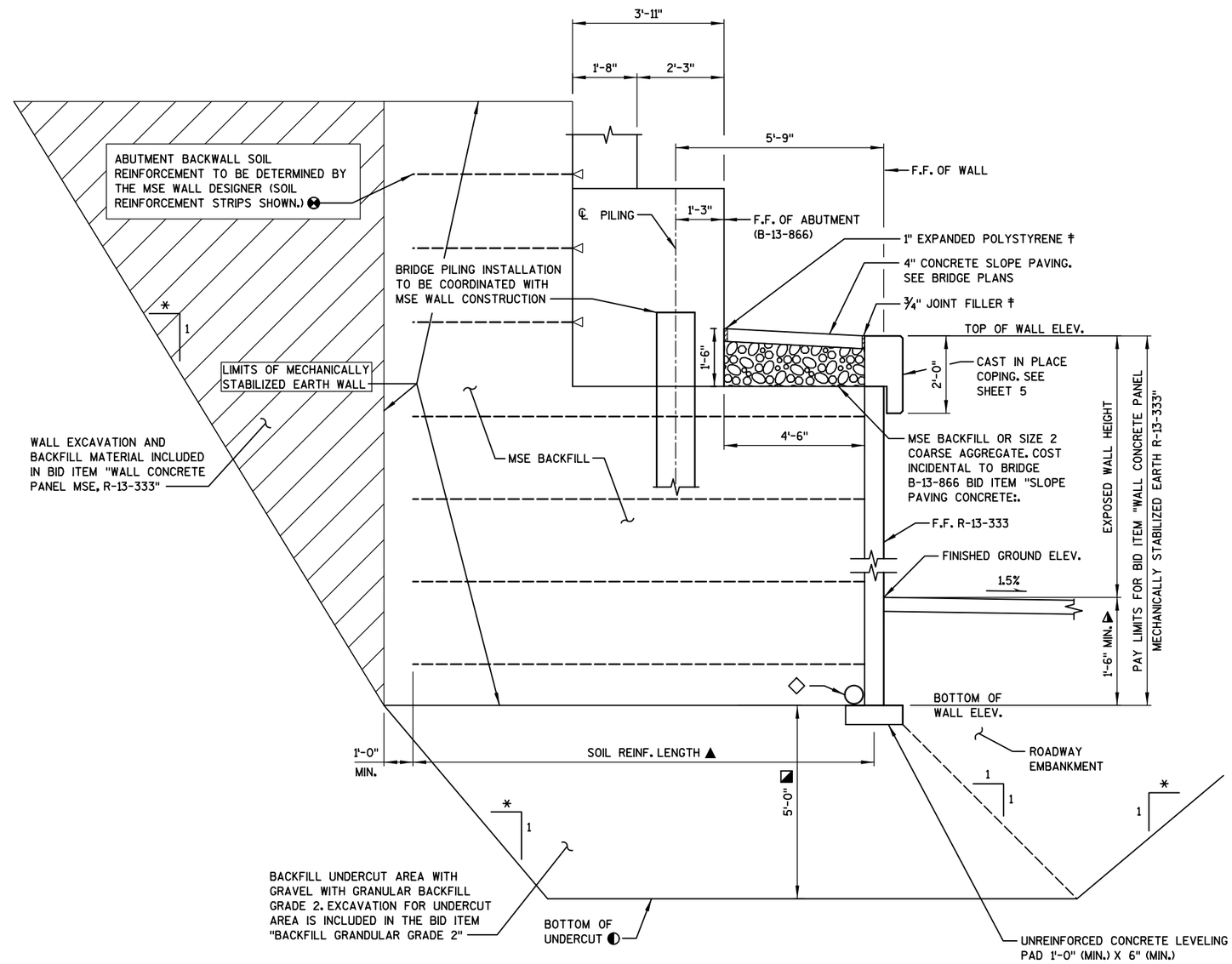

TYPICAL WALL SECTION AT ABUTMENT

(WALL STA. 10+52.50 TO 10+74.62)

▲ MINIMUM LENGTH OF MSE WALL REINFORCING STRIPS SHALL BE 70% OF THE TOTAL WALL HEIGHT (EXPOSED HEIGHT PLUS EMBEDMENT DEPTH) OR 8.0 FEET, WHICHEVER IS GREATER. SOIL REINFORCING MUST EXTEND A MINIMUM OF 3.0 FEET BEYOND THE FAILURE PLANE FOR INTERNAL STABILITY AS DEFINED BY AASHTO SPECIFICATIONS.

◭ MINIMUM EMBEDMENT BASED ON SITE SPECIFIC PARAMETERS. FIELD EMBEDMENTS SHALL MEET OR EXCEED THE MINIMUM EMBEDMENT. FIELD EMBEDMENT BELOW MINIMUM EMBEDMENT SHALL NOT BE INCLUDED IN THE PAY LIMITS.

* EXCAVATION SLOPE DETERMINED BY CONTRACTOR.

‡ SEAL ALL HORIZONTAL AND VERTICAL SURFACES OF FILLER AND EXPANDED POLYSTYRENE WITH NON-STAINING, GRAY, NON-BITUMINOUS JOINT SEALER (1-INCH DEEP AND HOLD 1/8" BELOW SURFACE OF CONCRETE).

⊗ UNACTORED SUPERSTRUCTURE LATERAL LOADS TRANSFERRED TO THE ABUTMENT ARE TAKEN TO BE KIPS PER FOOT OF ABUTMENT LENGTH. THE VALUES ARE TO BE USED FOR THE LRFD DESIGN OF THE ABUTMENT BACKWALL SOIL REINFORCEMENT BY THE MSE WALL MANUFACTURER. THE FOLLOWING AASHTO LINE LOADS SHALL BE INCLUDED IN THE WALL DESIGN:

BR = 0.23 KLF WS = 1.48 KLF
TU = 0.773 KLF WL = 0.00 KLF

THE ABUTMENT BACKWALL SOIL REINFORCEMENT AND CONNECTION TO THE ABUTMENT ARE INCLUDED WITH THE BID ITEM "ABUTMENT BACKWALL SOIL REINFORCEMENT" AS SHOWN ON THE B-13-866 BRDGE PLANS.

◐ WALL SEBGRADE SHALL BE APPROVED BY THE SOUTHWEST REGION SOILS ENGINEER PRIOR TO CONSTRUCTION OF THE WALL.

◪ APPROXIMATELY 5'-0" OF UNDERCUT IS ANTICIPATED TO REMOVE THE EXISTING LAYERS OF SOFT SOIL UNDER THE WALL. THE ACTUAL DEPTH OF UNDERCUT MAY VARY AND SHALL BE DETERMINED BY THE SOUTHWEST REGION SOILS ENGINEER.

◇ PIPE UNDERDRAIN WRAPPED (6-INCH) SLOPE 0.5% MIN. TO CONNECT TO STRUCTURE B104.2.

8

8

NO.	DATE	REVISION	BY

STATE OF WISCONSIN
DEPARTMENT OF TRANSPORTATION

STRUCTURE R-13-333

DRAWN BY DTH PLANS CK'D. BMO

WALL DETAILS

SHEET 2 276

FILE NAME : S:\MAD\1200--1299\1275\027\Micros\PLAN\080402_wd.dgn

DRAFT

STATE PROJECT NUMBER
5849-02-02

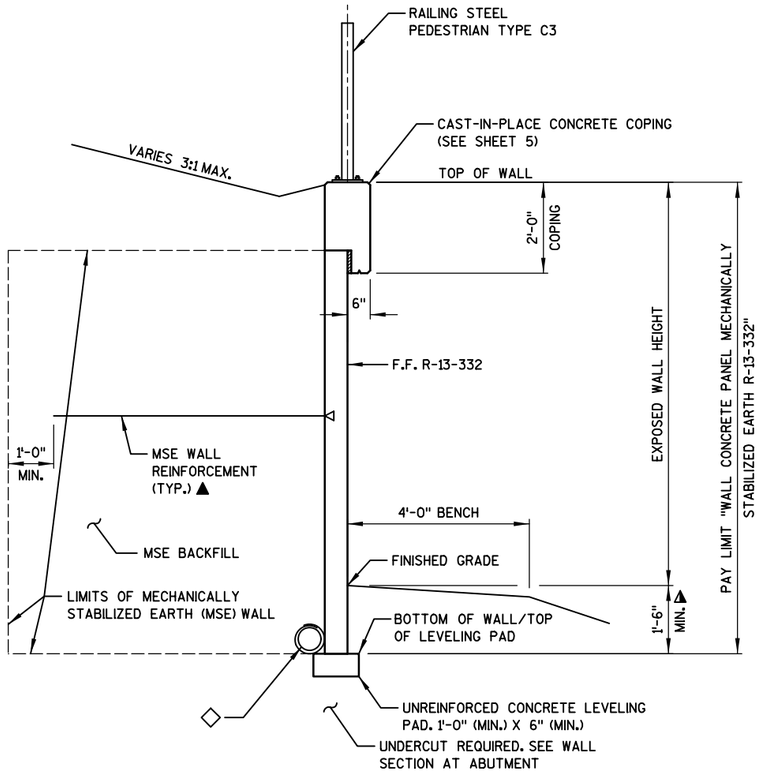

TYPICAL SECTION THRU MSE RETAINING WALL

(WALL STA. 10+00.00 TO 10+52.50)
(WALL STA. 10+74.62 TO 11+50.00)

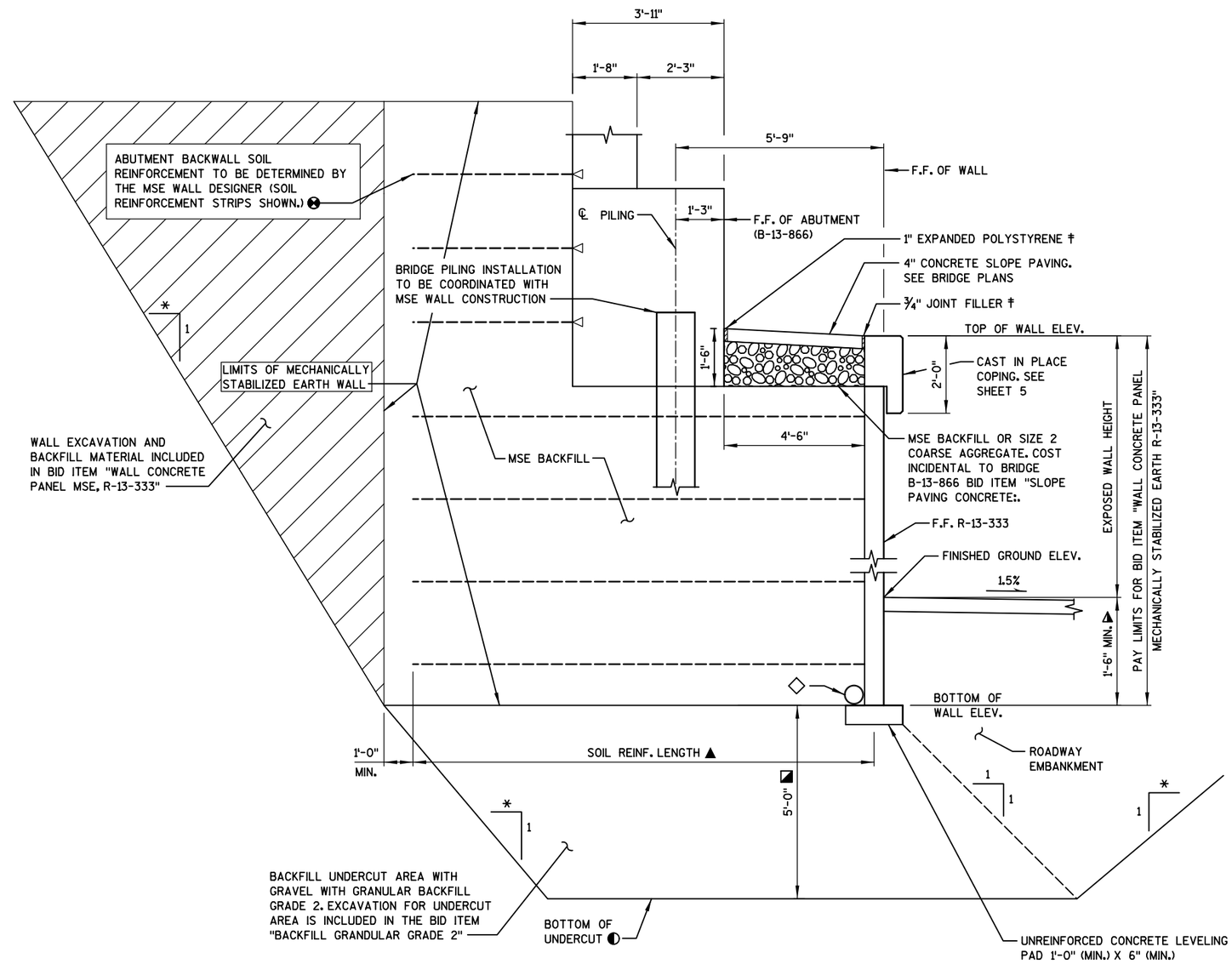

TYPICAL WALL SECTION AT ABUTMENT

(WALL STA. 10+52.50 TO 10+74.62)

▲ MINIMUM LENGTH OF MSE WALL REINFORCING STRIPS SHALL BE 70% OF THE TOTAL WALL HEIGHT (EXPOSED HEIGHT PLUS EMBEDMENT DEPTH) OR 8.0 FEET, WHICHEVER IS GREATER. SOIL REINFORCING MUST EXTEND A MINIMUM OF 3.0 FEET BEYOND THE FAILURE PLANE FOR INTERNAL STABILITY AS DEFINED BY AASHTO SPECIFICATIONS.

◭ MINIMUM EMBEDMENT BASED ON SITE SPECIFIC PARAMETERS. FIELD EMBEDMENTS SHALL MEET OR EXCEED THE MINIMUM EMBEDMENT. FIELD EMBEDMENT BELOW MINIMUM EMBEDMENT SHALL NOT BE INCLUDED IN THE PAY LIMITS.

* EXCAVATION SLOPE DETERMINED BY CONTRACTOR.

‡ SEAL ALL HORIZONTAL AND VERTICAL SURFACES OF FILLER AND EXPANDED POLYSTYRENE WITH NON-STAINING, GRAY, NON-BITUMINOUS JOINT SEALER (1-INCH DEEP AND HOLD 1/8" BELOW SURFACE OF CONCRETE).

⊗ UNACTORED SUPERSTRUCTURE LATERAL LOADS TRANSFERRED TO THE ABUTMENT ARE TAKEN TO BE KIPS PER FOOT OF ABUTMENT LENGTH. THE VALUES ARE TO BE USED FOR THE LRFD DESIGN OF THE ABUTMENT BACKWALL SOIL REINFORCEMENT BY THE MSE WALL MANUFACTURER. THE FOLLOWING AASHTO LINE LOADS SHALL BE INCLUDED IN THE WALL DESIGN:

BR = 0.23 KLF WS = 1.48 KLF
TU = 0.773 KLF WL = 0.00 KLF

THE ABUTMENT BACKWALL SOIL REINFORCEMENT AND CONNECTION TO THE ABUTMENT ARE INCLUDED WITH THE BID ITEM "ABUTMENT BACKWALL SOIL REINFORCEMENT" AS SHOWN ON THE B-13-866 BRDGE PLANS.

◐ WALL SEBGRADE SHALL BE APPROVED BY THE SOUTHWEST REGION SOILS ENGINEER PRIOR TO CONSTRUCTION OF THE WALL.

◪ APPROXIMATELY 5'-0" OF UNDERCUT IS ANTICIPATED TO REMOVE THE EXISTING LAYERS OF SOFT SOIL UNDER THE WALL. THE ACTUAL DEPTH OF UNDERCUT MAY VARY AND SHALL BE DETERMINED BY THE SOUTHWEST REGION SOILS ENGINEER.

◇ PIPE UNDERDRAIN WRAPPED (6-INCH) SLOPE 0.5% MIN. TO CONNECT TO STRUCTURE B104.2.

8

8

NO.	DATE	REVISION	BY

STATE OF WISCONSIN
DEPARTMENT OF TRANSPORTATION

STRUCTURE R-13-333

DRAWN BY DTH PLANS CK'D. BMO

WALL DETAILS

SHEET 277

FILE NAME : S:\MAD\1200--1299\1275\027\Micros\PLAN\080402_wd.dgn

DRAFT

STATE PROJECT NUMBER
5849-02-02

GEOMETRY TABLE

WALL STATION	TOP OF WALL COPING ELEV.	FINISHED GRADE ELEV.
9+55.00	1020.61	1020.61
10+00.00	1029.01	1020.55
10+25.00	1033.68	1020.02
10+50.00	1038.34	1019.99
10+52.50	1038.81	1019.97
10+52.50	1032.55	1019.97
10+74.62	1032.55	1019.83
10+74.62	1039.02	1019.83
10+75.00	1038.97	1019.83
10+83.82	1037.91	1019.79
11+00.00	1037.51	1023.65
11+25.00	1036.54	1029.61

WALL EXTERNAL & OVERALL STABILITY EVALUATION

DIMENSIONS	EVALUATED LOCATIONS			
WALL HEIGHT (FEET)[1]	14.38	18.96	11.78	
EXPOSED WALL HEIGHT (FEET)	12.88	17.46	10.28	
MINIMUM LENGTH OF REINFORCEMENT (FEET) ◪	16	14	9	
WALL STATION	10+67.06	10+67.12	11+00	
BORING USED	BB-2, U-1			
CAPACITY TO DEMAND RATIO (CDR)[2, 3]				
SLIDING (CDR>1.0)	1.0	1.4	1.4	
ECCENTRICITY (CDR>1.0)	1.5	1.7	1.7	
OVERALL STABILITY (CDR>1.0) ☆	1.1	--	--	
BEARING RESISTANCE (CDR>1.0)	1.1	1.4	2.3	
FACTORED BEARING RESISTANCE (PSF)	5900	6200	6500	

NOTES:
1. THE WALL HEIGHT INCLUDES AN EMBEDMENT OF 1.5 FT.
2. THE WALL STABILITY EVALUATION INCLUDED A SURCHARGE LOAD OF 100 PSF.
3. CDR VALUES ARE PRESENTED IN CHAPTER 14 OF THE WISDOT BRIDGE MANUAL.

* FINAL DESIGN FOR SLIDING, ECCENTRICITY, AND BEARING RESISTANCE IS THE RESPONSIBILITY OF THE CONTRACTOR'S WALL DESIGNER.

◪ THE LENGTHS PROVIDED IN THE TABLE ARE THE MINIMUM REQUIRED REINFORCEMENT LENGTH BASED UPON THE MINIMUM DESCRIBED IN THE WALL SYSTEM SPECIAL PROVISION OR EXTERNAL AND OVERALL STABILITY AT THE DESIGNATED LOCATIONS. THESE DESIGNATED LOCATIONS REPRESENT TYPICAL AND CRITICAL WALL LOCATIONS, BUT SHALL NOT BE CONSIDERED ALL INCLUSIVE. THE CONTRACTOR DESIGN LENGTHS SHALL MEET OR EXCEED THE MINIMUM VALUES REPRESENTED IN THE TABLE AT THESE DESIGNATED LOCATIONS.

☆ THE LENGTHS PROVIDED IN THE TABLE ARE THE MINIMUM REQUIRED REIINFORCEMENT LENGTHS BASED ON OVERALL STABILITY RERFORMED BY THE WALL DESIGNER COMPOUND STABILITY IS THE CONTRACTOR'S RESPONSIBILITY.

NOTES:
1. THE PROJECT SOILS ENGINEER SHOULD REVIEW THE SUBSURFACE CONDITIONS PRIOR TO CONSTRUCTION OF THE WALLS TO DETERMINE IF THE SOILS HAVE THE MINIMUM BEARING STRENGTH SHOWN IN THE TABLE ABOVE.

2. FINAL DESIGN FOR SLIDING, ECCENTRICITY, AND BEARING RESISTANCE AT OTHER WALL STATIONS IS THE RESPONSIBILITY OF THE CONTRACTOR'S WALL DESIGNER.

SOIL PARAMETERS

STRATUM LOCATIONS & SOIL DESCRIPTIONS	TOTAL UNIT WEIGHT	FRICTION ANGLE (DEGREES)	COHESION (PSF)
GRANULAR BACKFILL (REINFORCING ZONE OR BACKFILL	120	30	0
GRANULAR RETAINED SOIL *	135	30	0
BOR BB-1			
LEAN CLAY ELEV 1031.3-1029.8	130	0	1,000
LEAN CLAY ELEV 1029.8-1025.8	135	0	1,500
POORLY-GRADED SAND WITH GRAVEL AND COBBLES ELEV 1025.8-1021.3	130	38	0
SILTY SAND WITH GRAVEL, COBBLES, AND BOULDERS ELEV 1021.3-1012.3	135	34	0
SANDSTONE ELEV 1012.3-1009.3	120	0	72,000 (TOP) 144,000 (BOTTOM)
SANDSTONE ELEV 1009.3-997.7			144,000 (TOP) 288,000 (BOTTOM)
BOR BB-2			
LEAN CLAY ELEV 1019.5-1019.0	130	0	1,000
LEAN CLAY ELEV 1019.0-1016.5	130	0	1,500
LEAN CLAY ELEV 1016.5-1014.0	130	0	1,400
LEAN CLAY ELEV 1014.0-1011.5	135	0	1,200
SILTY SAND WITH GRAVEL, COBBLES, AND BOULDERS ELEV 1011.5-1009.0	135	33	0
SILTY SAND WITH GRAVEL, COBBLES, AND BOULDERS ELEV 1009.0-996.5	135	34	0
POORLY-GRADED GRAVEL WITH SAND AND COBBLES ELEV 996.5-991.5	135	41	0
SILTY SAND WITH GRAVEL, COBBLES, AND BOULDERS ELEV 991.5-989.5	135	31	0
POORLY-GRADED SAND WITH GRAVEL ELEV 989.5-982.5	135	43	0
POORLY-GRADED SAND WITH GRAVEL ELEV 982.5-980	135	38	0
POORLY-GRADED SAND WITH GRAVEL ELEV 980.0-970.5	135	43	0
SANDSTONE ELEV 970.5-965.5	120	0	72000 (TOP) 144,000 (BOTTOM)
BOR RW-5			
LEAN CLAY ELEV 1035.9-1034.9	130	0	1,000
LEAN CLAY ELEV 1034.9-1029.4	135	0	1,700
SILTY SAND WITH GRAVEL AND COBBLES ELEV 1029.4-1027.9	135	33	0
SILTY SAND WITH GRAVEL AND COBBLES ELEV 1027.9-1023.9	135	40	0
SILTY SAND WITH GRAVEL, COBBLES, AND BOULDERS ELEV 1023.9-1016.9	135	34	0
SANDSTONE ELEV 1016.9-1013.9	120	38	0
SANDSTONE ELEV 1013.9-1007.2	120	45	0
BOR U-1			
LEAN CLAY ELEV 1019.1-1018.9	115	0	500
POORLY-GRADED GRAVEL ELEV 1018.9-1018.4	110	29	0
GRAVELLY LEAN CLAY ELEV 1018.4-1017.9	120	0	1,000
SANDY SILTY CLAY WITH GRAVEL ELEV 1017.9-1013.1	130	0	2,000
SILTY SAND WITH GRAVEL, COBBLES, AND BOULDERS ELEV 1013.1-1011.1	128	29	0
SILTY SAND WITH GRAVEL, COBBLES, AND BOULDERS ELEV 1011.1-1002.1	135	35	0
SILTY SAND WITH GRAVEL, COBBLES, AND BOULDERS ELEV 1002.1-996.6	135	34	0
LEAN CLAY ELEV 996.6-991.6	135	0	3,700
POORLY-GRADED SAND ELEV 991.6-989.1	120	35	0
BOR U-2			
LEAN CLAY ELEV 1020.6-1020.4	115	0	500
SILTY SAND WITH GRAVEL ELEV 1020.4-1017.1	130	36	0
LEAN CLAY ELEV 1017.1-1014.6	135	0	3,300
SILTY SAND WITH GRAVEL AND COBBLES ELEV 1014.6-1007.6	135	35	0
SANDY LEAN CLAY WITH GRAVEL AND COBBLES ELEV 1007.6-996.5	135	0	4,100
SANDY LEAN CLAY WITH GRAVEL AND COBBLES ELEV 996.5-990.7	135	0	4,100
BOR U-3			
ASPHALT ELEV 1019.8-1019.7	145	--	--
SILTY GRAVEL WITH SAND ELEV 1019.7-1017.3	135	37	0
POORLY-GRADED SAND WITH SILT AND GRAVEL ELEV 1017.3-1015.8	120	33	0
SILTY SAND WITH GRAVEL AND COBBLES ELEV 1015.8-1008.8	135	40	0
CLAYEY SAND WITH GRAVEL AND COBBLES ELEV 1008.8-1001.2	135	33	0
SANDSTONE ELEV 1001.2-996.5	120	45	0
SANDSTONE ELEV 996.5-991.1	120	45	0

8

8

NO.	DATE	REVISION	BY

STATE OF WISCONSIN
DEPARTMENT OF TRANSPORTATION
STRUCTURES DESIGN SECTION

STRUCTURE R-13-333

DRAWN BY DTH | PLANS CK'D. BMO

DESIGN TABLE

SHEET 3 278

FILE NAME : S:\MAD\1200--1299\1275\027\Micros\PLAN\080403_cd.dgn

DRAFT

STATE PROJECT NUMBER
5849-02-02

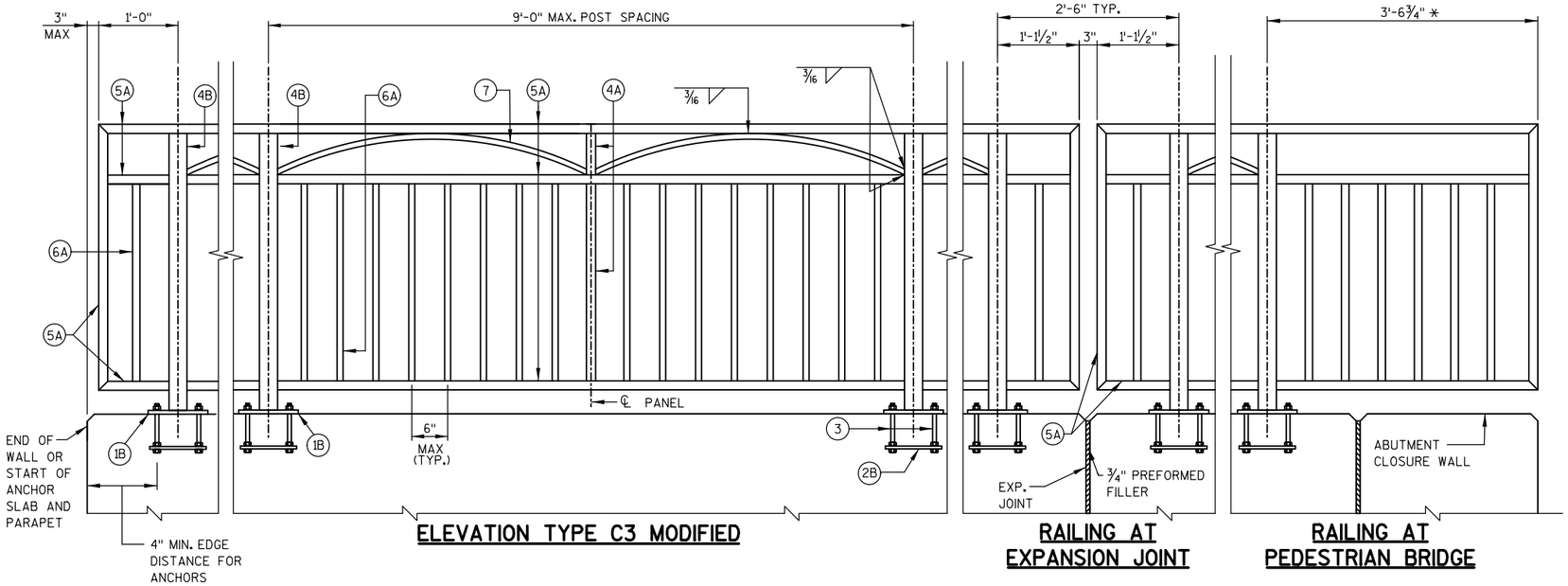

ELEVATION TYPE C3 MODIFIED

RAILING AT EXPANSION JOINT

RAILING AT PEDESTRIAN BRIDGE

LEGEND

(1B) PLATE ⅝" X 6" X 10" WITH ¾" X 1½" SLOTTED HOLES

(2B) ¼" X 5" X 9" ANCHOR PLATE WITH 11/16" ϕ HOLES FOR THR'D. RODS NO. 3.

(3) ⅝" DIA. X 9" LONG, TYPE 316 STAINLESS STEEL THREADED RODS (MIN. TENSILE STRENGTH = 70 KSI) WITH NUT AND WASHERS OF SAME ALLOY GROUP. ALTERNATE ANCHORAGE: CONCRETE ADHESIVE ANCHORS ⅝-INCH. EMBED 7" IN CONCRETE FOR RAIL POSTS. EMBED 5" IN CONCRETE FOR END RAILS. ADHESIVE ANCHORS SHALL CONFORM TO SECTION 502.2.12 OF THE STANDARD SPECIFICATIONS.

(4A) STRUCTURAL TUBING 3" X 1½" X 3/16". PLACE VERTICAL. WELD TO NO. 1 & 5.

(4B) STRUCTURAL TUBING 3" X 3" X 3/16". PLACE VERTICAL. WELD TO NO. 1 & 5.

(5A) STRUCTURAL TUBING 3" X 1½" X 3/16" RAILS. WELD TO NO. 1 & NO. 4. INSIDE OF TUBE TO BE PAINTED AT ALL FIELD ERECTION JOINTS.

(6A) BAR 1" X 1" PICKETS. WELD TO NO. 5. (SPACE AT 6" MAX ℄ TO ℄ SPACING). PLACE VERTICAL.

(7) BAR 1" X 1". BEND TO REQUIRED RADIUS. WELD TO NO. 4 & 5.

(9A) RECTANGULAR SLEEVE FABRICATED FROM 3/16" PLATES. PROVIDE "SLIDING FIT".

(10A) RECTANGULAR SLEEVE FABRICATED FROM 3/16" PLATES. (1'-4" @ FIELD ERECTION JTS.)

* DIMENSION CALCULATED ASSUMING 16'-8" OUT-TO-OUT WIDTH OF STEEL TRUSS PEDESTRIAN BRIDGE. DIMENSION SHALL BE VERIFIED DURING CONSTRUCTION TO PROVIDE >6" GAP BETWEEN END OF RAILING AND STEEL TRUSS.

RAILING NOTES

BID ITEM SHALL BE "RAILING STEEL TYPE C3 GALVANIZED PEDESTRIAN R-13-264", WHICH SHALL INCLUDE ALL STEEL ITEMS SHOWN.

POST BASE PLATES SHALL BE FLAT WITH ALL SURFACES SMOOTH AND FREE FROM WARP AND ALL EDGES SMOOTH, STRAIGHT AND VERTICAL. ALL PLATE CUTS SHALL BE MACHINE OR MACHINE FLAME CUTS.

ALL PLATES, BARS, AND RECTANGULAR SLEEVES SHALL CONFORM TO ASTM A709 GRADE 36. ALL STRUCTURAL TUBING SHALL CONFORM TO ASTM A500 GRADE B.

ANCHORAGES SHALL BE ACCURATELY PLACED TO PROVIDE CORRECT ALIGNMENT OF RAILING. SET NORMAL TO GRADE.

CUT BOTTOM OF POST TO MAKE POST VERTICAL IN BOTH TRANSVERSE AND LONGITUDINAL DIRECTION.

STEEL SHIMS SHALL BE PROVIDED & USED UNDER BASE PLATES WHERE REQUIRED FOR ALIGNMENT, AND SHALL BE GALVANIZED.

CAULK AROUND PERIMETER OF BASE PLATES, NO. 1, AND FILL BOLT SLOT OPENINGS IN SHIMS AND BASE PLATES WITH NON-STAINING GRAY NON-BITUMINOUS JOINT SEALER.

ALL MATERIAL (EXCEPT NO. 3) SHALL BE GALVANIZED AFTER FABRICATION. PRIOR TO GALVANIZING, THE STEEL RAILING SHALL BE GIVEN A NO. 6 BLAST CLEANING PER SSPC SPECIFICATIONS. PAINT OVER GALVANIZING WITH AN APPROVED TIE COAT AND TOP COAT AS SPECIFIED IN THE SPECIAL PROVISIONS. THE RAILING SHALL BE PAINTED FEDERAL COLOR NO. 14090 (GREEN).

VENT HOLES SHALL BE DRILLED IN POST AND RAIL MEMBERS AS REQUIRED TO FACILITATE GALVANIZING AND DRAINAGE.

RAILING SHALL BE FABRICATED IN LENGTHS THAT INCLUDE 3 OR 4 POSTS.

TOUCH-UP PAINTING TO BE DONE AT COMPLETION OF STEEL RAILING INSTALLATION TO THE SATISFACTION OF THE ENGINEER AT NO EXTRA COST.

COORDINATE POST LAYOUT WITH MSE WALL COPING EXPANSION JOINT LAYOUT.

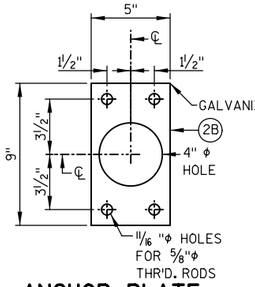

ANCHOR PLATE

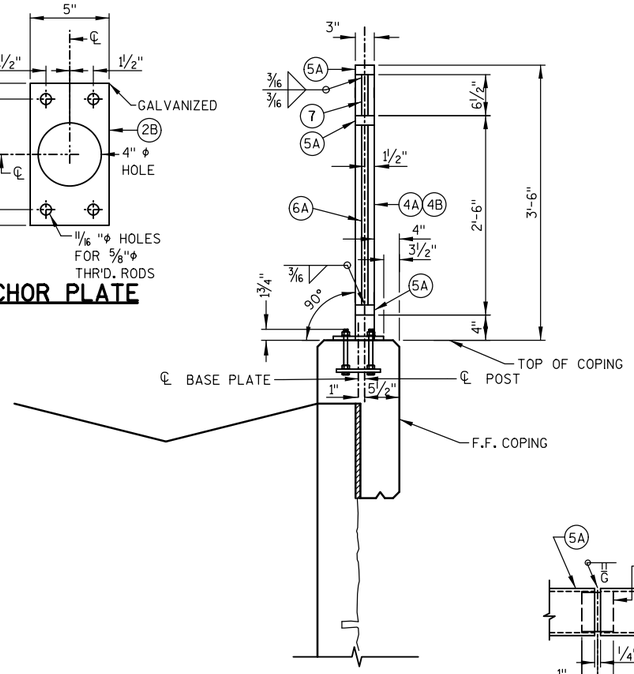

SECTION THRU RAILING

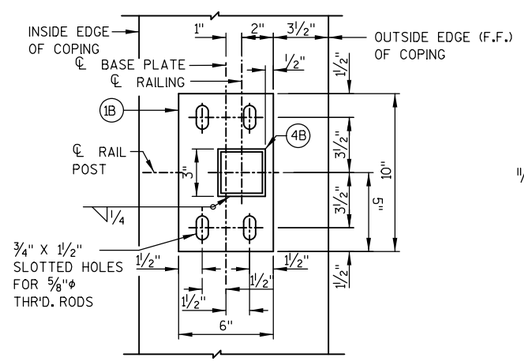

TYPICAL RAIL POST BASE PLATE

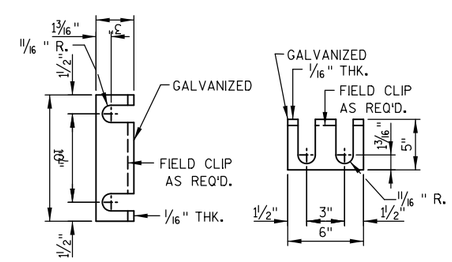

RAIL POST SHIM DETAIL
(2 SETS PER POST)

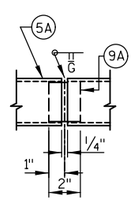

SHOP RAIL SPLICE DETAIL
(LOCATION MUST BE SHOWN ON SHOP DRAWINGS)

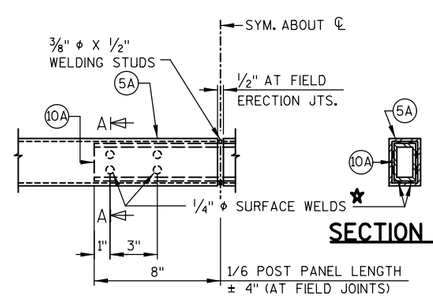

FIELD ERECTION JOINT DETAIL
★ MIN. ⅝" FLAT SURFACE DIA. PUNCHINGS OR STUDS MAY BE USED AS AN ALTERNATE.

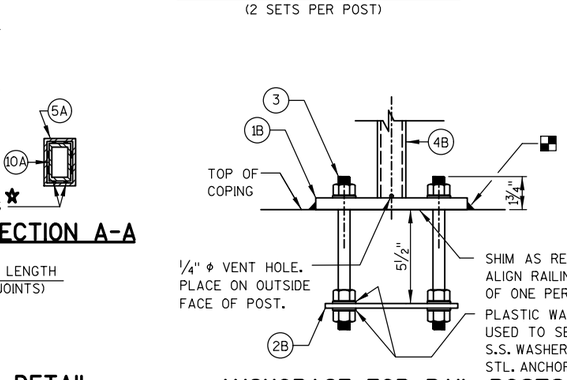

ANCHORAGE FOR RAIL POSTS
NOTE: ANCHOR PLATE NOT REQUIRED WHEN TYPE S ANCHORS ARE USED.

NO.	DATE	REVISION	BY

STATE OF WISCONSIN
DEPARTMENT OF TRANSPORTATION

STRUCTURE R-13-333

DRAWN BY DTH | PLANS CK'D. BMO

RAILING DETAILS

SHEET 4
279

8

8

FILE NAME : S:\MAD\1200--1299\1275\027\Micros\PLAN\080404_cd.dgn

DRAFT

STATE PROJECT NUMBER
5849-02-02

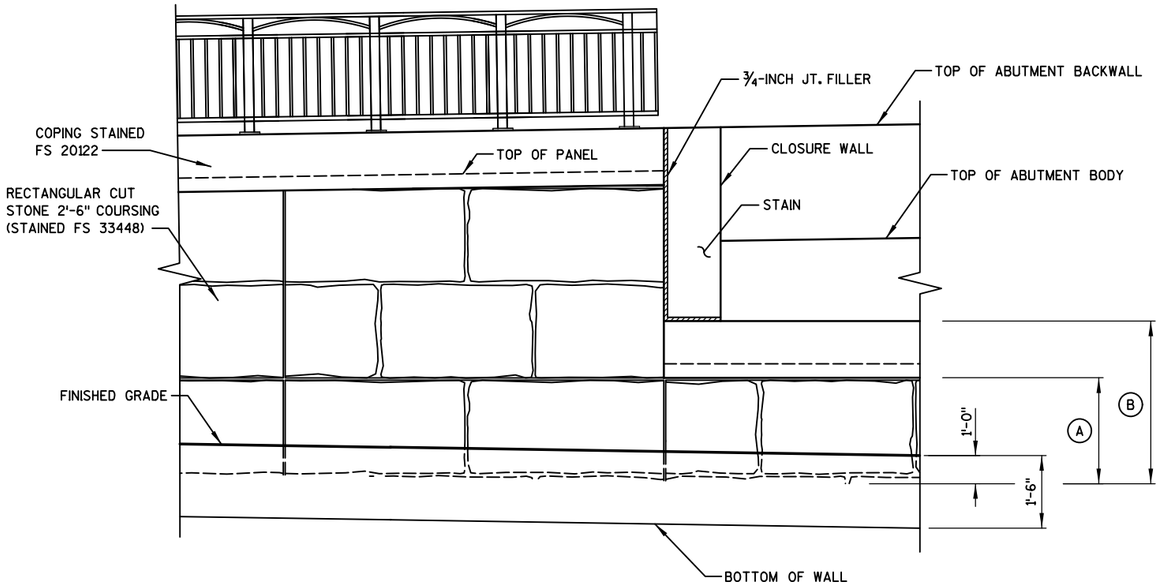

FORMLINER DETAILS

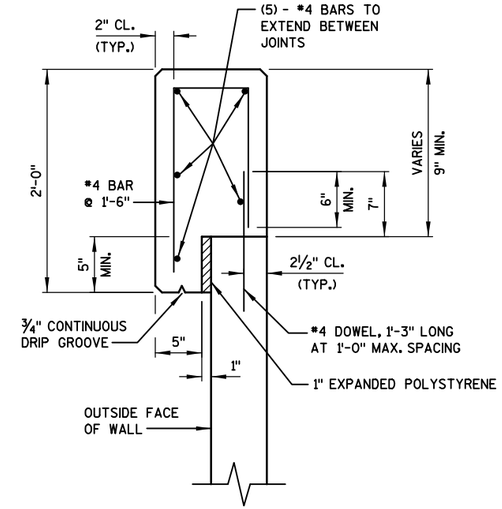

CAST-IN-PLACE CONCRETE COPING DETAIL

NOTE:
CONCRETE COPING REINFORCING STEEL SHALL BE DESIGNED AT LOCATIONS WHERE RAILING, FENCING, OR ANY OTHER ATTACHMENTS ARE MADE.

NOTES:

PROVIDE AESTHETIC DETAILS SHOWN IN THIS PLAN AND AS NOTED IN THE SPECIAL PROVISIONS.

ALL STONE EDGES ADJACENT TO HORIZONTAL PANEL JOINTS SHALL BE CUT STONE TEXTURE.

ALL STONE EDGES ADJACENT TO VERTICAL PANEL JOINTS SHALL BE FLUSH CUT.

AVERAGE RELIEF IS ¾" FOR THE STONES WITH A MAXIMUM RELIEF OF 2" FOR THE JOINTS.

ALL PANELS ARE TO BE STAINED PER DETAILS ON THIS SHEET.

ALL EXPOSED SURFACES OF FORMLINED BLOCKS TO BE SPLIT FACE INCLUDING FACES, CORNERS AND EDGES.

FORMLINER COURSING SHALL BE LEVEL AND CONTINUOUS ACROSS VERTICAL PANEL JOINTS.

(A) PAY LIMITS FOR "ARCHITECTURAL SURFACE TREATMENT" (BOTTOM OF COPING TO 1' BELOW FINISHED GRADE)

(B) PAY LIMITS FOR "CONCRETE STAINING" (TOP OF COPING TO 1' BELOW FINISHED GRADE)

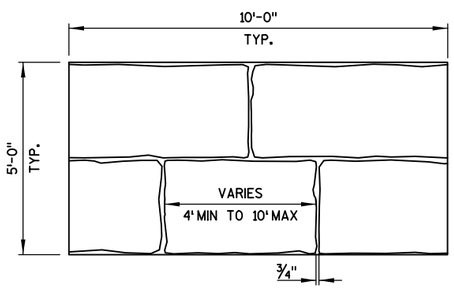

TYPICAL PANEL DETAILS

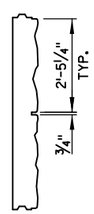

TYPICAL PANEL CROSS SECTION

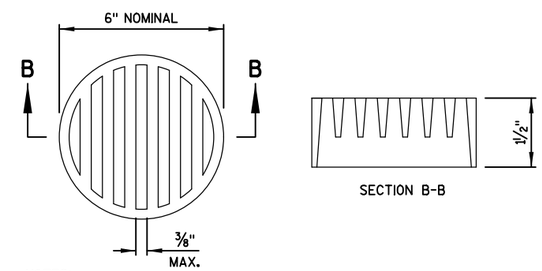

NOTES:
DIMENSIONS ARE APPROXIMATE. THE GRATE IS SIZED TO FIT INTO A PIPE COUPLING. ORIENT SHIELD SO SLOTS ARE VERTICAL.

THE RODENT SHIELD, PIPE COUPLING AND ATTACHMENT SCREWS SHALL BE INCLUDED WITH BID ITEM "PIPE UNDERDRAIN WRAPPED 6-INCH."

THE RODENT SHIELD SHALL BE A PVC GRATE SIMILAR TO THIS DETAIL. THE GRATE IS COMMERCIALLY AVAILABLE AS A FLOOR STRAINER. A PIPE COUPLING IS REQUIRED FOR THE ATTACHMENT OF THIS SHIELD TO THE EXPOSED END OF THE PIPE UNDERDRAIN. THE SHIELD SHALL BE FASTENED TO THE PIPE COUPLING WITH TWO OR MORE NO. 10 x 1-INCH STAINLESS STEEL SHEET METAL SCREWS.

RODENT SHIELD DETAIL

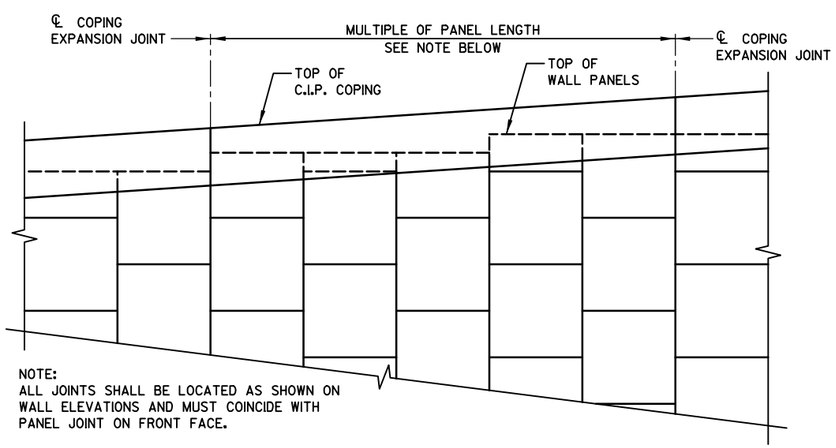

NOTE:
ALL JOINTS SHALL BE LOCATED AS SHOWN ON WALL ELEVATIONS AND MUST COINCIDE WITH PANEL JOINT ON FRONT FACE.

C.I.P. COPING PARTIAL ELEVATION

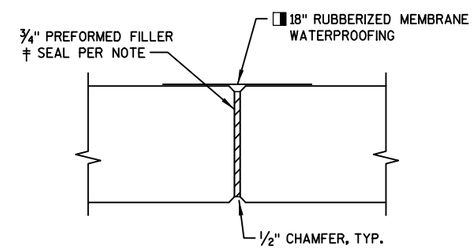

COPING EXPANSION JOINT

DO NOT RUN BAR STEEL THRU JOINT.
MAX. SPACING OF JOINT = 50'

◨ MEMBRANE WATERPROOFING TO EXTEND FROM TOP OF COPING TO 6" BELOW TOP OF PANELS. MEMBRANE WATERPROOFING INCLUDED IN BID ITEM "WALL CONCRETE PANEL MECHANICALLY STABILIZED EARTH R-13-333".

‡ SEAL ALL EXPOSED HORIZ. & VERT. SURFACES OF FILLER WITH NON-STAINING GRAY NON-BITUMINOUS JOINT SEALER. (1" DEEP AND HOLD ⅛" BELOW SURFACE OF CONCRETE.)

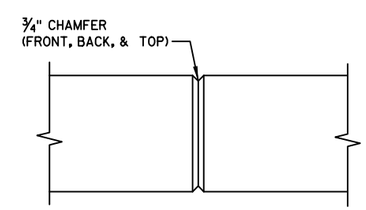

COPING CONTRACTION JOINT

DO NOT RUN BAR STEEL THRU JOINT. MAX. SPACING OF JOINT = 12'. SET JOINT LOCATION TO ALIGN WITH PANEL JOINT BELOW.

NO.	DATE	REVISION	BY

STATE OF WISCONSIN
DEPARTMENT OF TRANSPORTATION

STRUCTURE R-13-333

DRAWN BY DTH | PLANS CK'D.

AESTHETIC & COPING DETAILS

SHEET 280

8

8

FILE NAME : S:\MAD\1200--1299\1275\027\Micros\PLAN\080405_cd.dgn

BORINGS PERFORMED AND REPORT COMPLETED BY:
SOILS & ENGINEERING SERVICES, INC. (SES)
1102 STEWART STREET
MADISON, WI 53713

BORINGS WERE PERFORMED ON 11/27/2017
AND 01/09/2019.

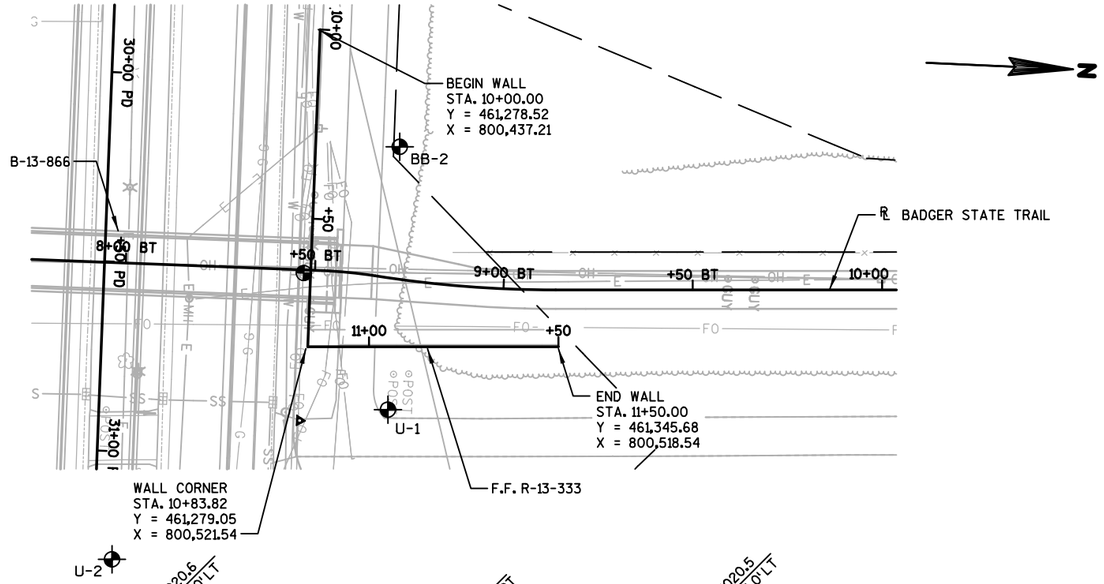

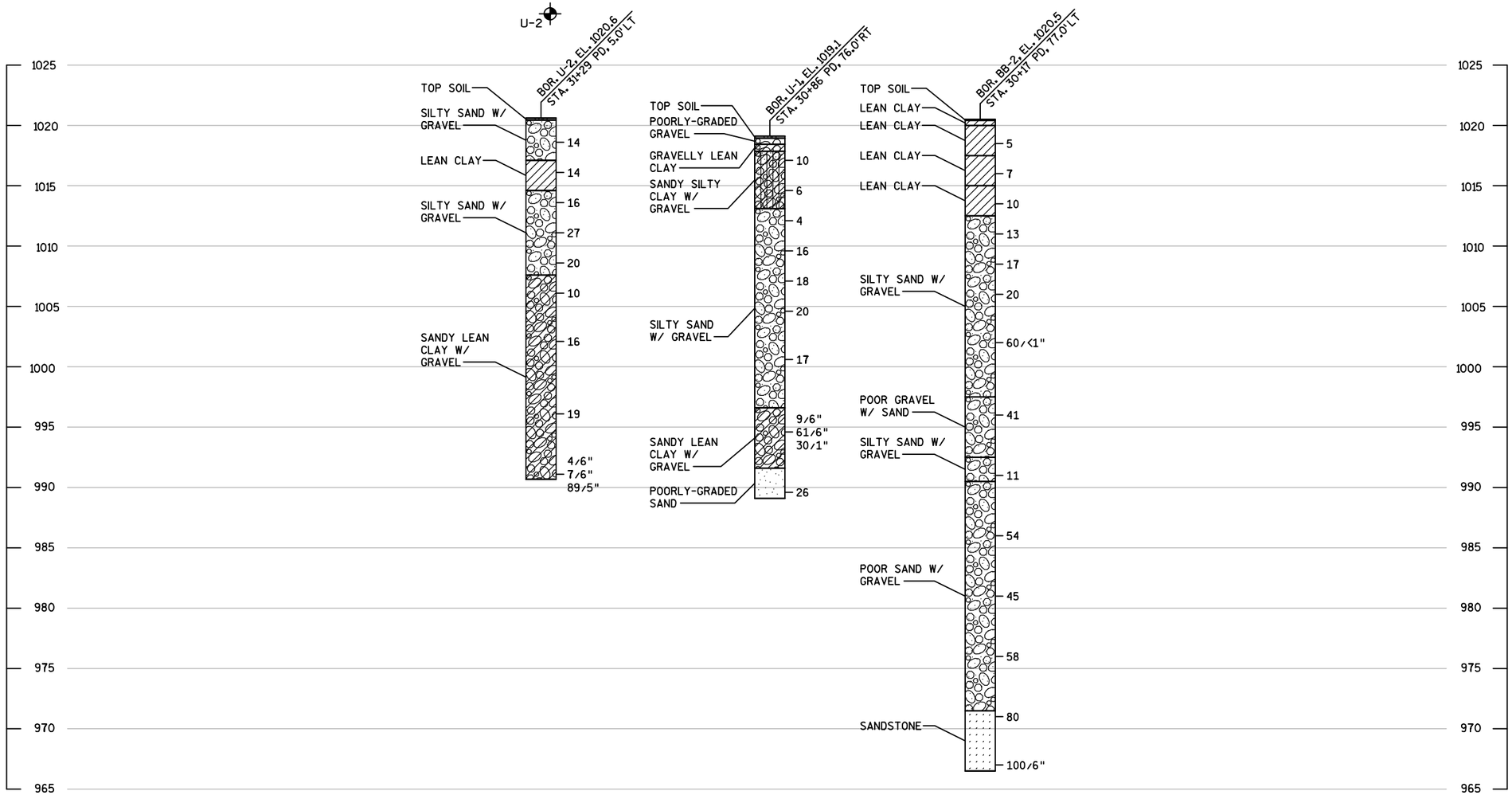

STATE PROJECT NUMBER

DRAFT

5843-02-02

MATERIAL SYMBOLS

ASPHALT	TOPSOIL	PEAT
CONCRETE	FILL	GRAVEL
SAND	CLAY	SILT
BOULDERS OR COBBLES	LIMESTONE	BEDROCK (UNKNOWN)
SHALE	SANDSTONE	IGNEOUS/ META

LEGEND OF BORING

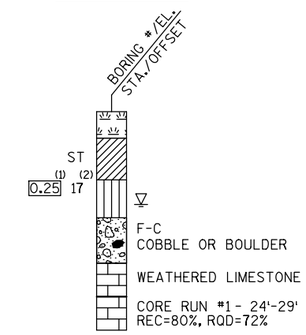

(1) UNCONFINED STRENGTH, AS DETERMINED BY A POCKET PENETROMETER (TSF)

(2) UNLESS OTHERWISE, SPECIFIED THE SPT 'N' VALUE IS BASED ON AASHTO T-206, STANDARD PENETRATION TEST. THE SPT 'N' VALUE PRESENTED HAS NOT BEEN CORRECTED FOR OVERBURDEN PRESSURE OR HAMMER EFFICIENCY.

GROUND WATER ELEVATION

- AT TIME OF DRILLING
- END OF DRILLING
- AFTER DRILLING

ABBREVIATIONS

F-FINE M-MEDIUM C-COARSE ST-SHELBY TUBE

SUBSURFACE EXPLORATION FOR FOUNDATION DESIGN AND BIDDERS INFORMATION

BORINGS WERE COMPLETED AT POINTS APPROXIMATELY AS INDICATED ON THIS DRAWING TO OBTAIN INFORMATION CONCERNING THE CHARACTER OF SUBSURFACE MATERIALS FOUND AT THE SITE. BECAUSE THE INVESTIGATED DEPTHS ARE LIMITED AND THE AREA OF THE BORINGS IS VERY SMALL IN RELATION TO THE ENTIRE SITE, THE WISCONSIN DEPARTMENT OF TRANSPORTATION DOES NOT WARRANT SIMILAR SUBSURFACE CONDITIONS BELOW, BETWEEN, OR BEYOND THESE BORINGS. VARIATIONS IN SOIL CONDITIONS SHOULD BE EXPECTED AND FLUCTUATIONS IN GROUNDWATER LEVELS MAY OCCUR.

NO.	DATE	REVISION	BY

STATE OF WISCONSIN
DEPARTMENT OF TRANSPORTATION

STRUCTURE B-13-333

DRAWN BY DTH PLANS CK'D. BMO

SUBSURFACE EXPLORATION

SHEET 6

8

8

SCALE =

FILE NAME : S:\MAD\1200--1299\1275\027\Micros\PLAN\080406_sx.dgn

DRAFT

STATE PROJECT NUMBER
5649-02-02

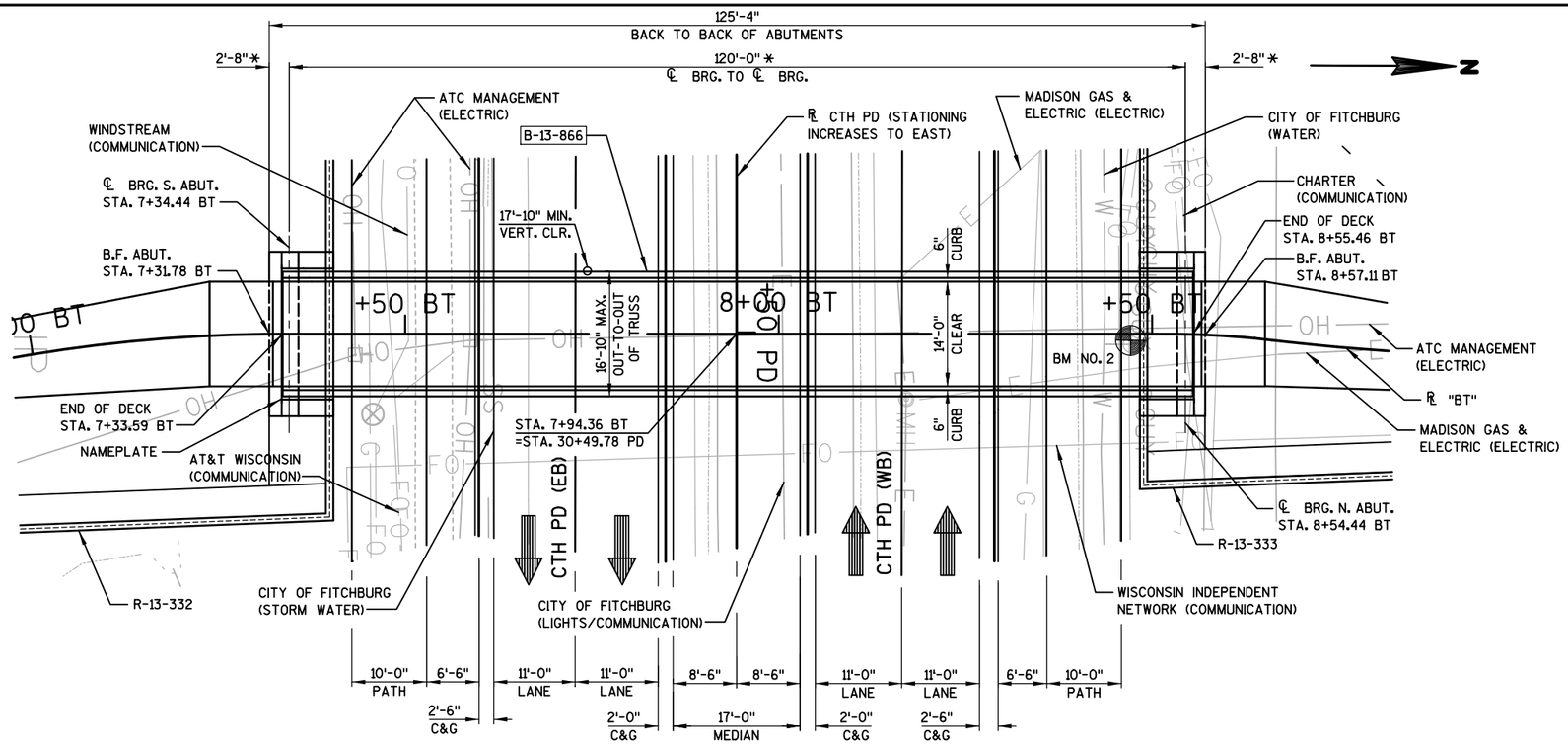

PLAN

(SINGLE SPAN PREFABRICATED STEEL TRUSS)

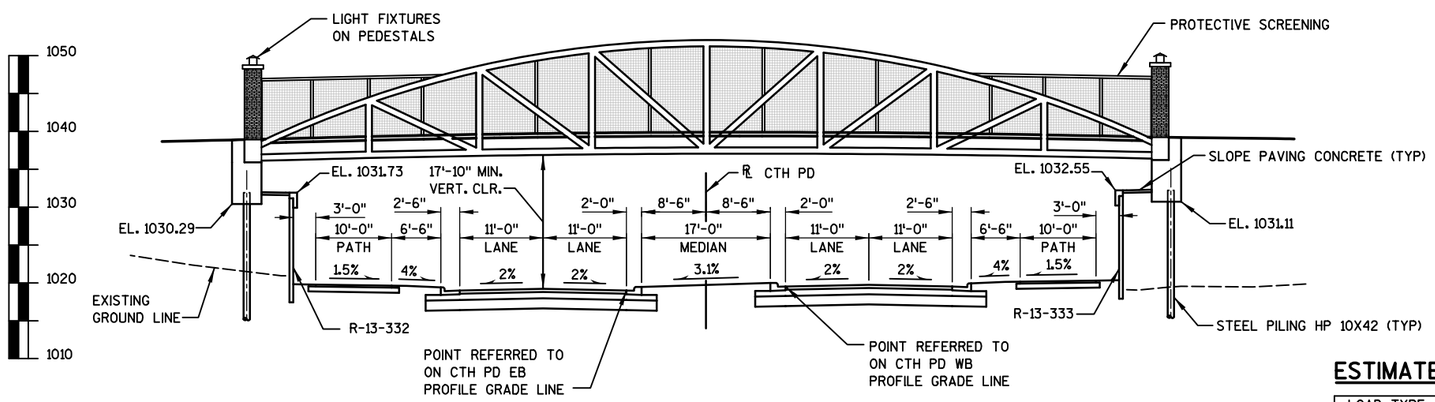

ELEVATION

(LOOKING WEST)

DESIGN DATA

ULTIMATE DESIGN STRESSES:

CONCRETE MASONRY, SLAB	f'c = 4,000 PSI
CONCRETE MASONRY, ALL OTHERS	f'c = 3,500 PSI
HIGH STRENGTH BAR STEEL REINFORCEMENT, GRADE 60	fy = 60,000 PSI
HIGH STRENGTH STRUCTURAL STEEL ASTM A847, ASTM A588, ASTM A606, OR ASTM A242	fy = 50 KSI
STRUCTURAL CARBON STEEL ASTM A36	fy = 36 KSI

LIVE LOAD:

90 PSF PEDESTRIAN LOAD
20,000 LB VEHICLE LAOD (H-10)

WIND LOAD:

WIND LOADS PER AASHTO LRFD GUIDE SPECIFICATIONS FOR THE DESIGN OF PEDESTRIAN BRIDGES

FOUNDATION DATA:

ABUTMENTS TO BE SUPPORTED O HP 10x42 STEEL PILING DRIVEN TO A REQUIRED DRIVING RESISTANCE OF 180 TONS** PER PILE AS DETERMINED BY THE MODIFIED GATES DYNAMIC FORMULA. ESTIMATED 35'-0" LONG AT SOUTH ABUTMENT. ESTIMATED 70'-0" LONG AT NORTH ABUTMENT.

** THE FACTORED AXIAL RESISTANCE OF PILES IN COMPRESSION USED FOR DESIGN IS THE REQUIRED DRIVING RESISTANCE MULTIPLIED BY A RESISTANCE FACTOR OF 0.5 USING MODIFIED GATES TO DETERMINE DRIVEN PILE CAPACITY.

TRAFFIC DATA:

CTH PD (MCKEE ROAD)
AADT: 29,900 (2020)
AADT: 32,200 (2040)
DESIGN SPEED: 45 MPH

LIST OF DRAWINGS

1. GENERAL PLAN
2. CROSS SECTION, GENERAL NOTES & DETAILS
3. SUBSURFACE EXPLORATION
4. SOUTH ABUTMENT
5. SOUTH ABUTMENT DETAILS
6. NORTH ABUTMENT
7. NORTH ABUTMENT DETAILS
8. ABUTMENT DETAILS
9. SUPERSTRUCTURE ELEVATIONS & AESTHETIC DETAILS
10. EXPANSION DEVICES
11. PROTECTIVE SCREENING DETAILS

DESIGN CONSULTANT CONTACT:
KYLE BETH (608) 251-4843

BRIDGE OFFICE CONTACT:
WILLIAM DREHER (608) 266-8489

* DIMENSIONS TO BE VERIFIED BY PREFABRICATED BRIDGE MANUFACTURER

ESTIMATED STEEL TRUSS BRIDGE REACTIONS

LOAD TYPE	P (LBS)	H (LBS)	L (LBS)
DEAD LOAD	60,600	---	---
UNIFORM LIVE LOAD, 90 PSF	37,800	---	---
WIND UPLIFT, 20 PSF WINDWARD/LEEWARD	-12,600/ -4,200	---	---
WIND HORIZ., WINDWARD/LEEWARD	-23,700/ 23,700	54,000	---
SEISMIC	---	---	---
THERMAL	---	---	8,500

P = VERTICAL LOAD AT EACH BASE PLATE (4 PER BRIDGE).
H = HORIZONTAL LOAD AT EACH SPAN END (2 PER BRIDGE).
L = LONGITUDINAL LOAD AT FIXED BEARING (4 PER BRIDGE).

NOTES:
1. VALUES IN THIS TABLE ARE ESTIMATES. ACTUAL VALUES SHALL BE PROVIDED BY PREFABRICATED BRIDGE MANUFACTURER.
2. "+" INDICATES DOWNWARD LOAD. "-" INDICATES UPWARD LOAD.

BENCHMARKS

NO.	STATION	DESCRIPTION	ELEV.
1	27+19.42 PD, 75.02'LT	TOP NUT OF FIRE HYDRANT	1027.67
2	30+51.62 PD, 52.85'LT	TOP NUT OF FIRE HYDRANT	1022.34
3	34+53.47 PD, 53.87'LT	TOP NUT OF FIRE HYDRANT	1024.46

NO.	DATE	REVISION	BY

STRAND ASSOCIATES®
910 WEST WINGRA DRIVE
MADISON, WISCONSIN 53715
(608)-251-4843
(608) 251-8655 FAX
WWW.STRAND.COM

STATE OF WISCONSIN
DEPARTMENT OF TRANSPORTATION

ACCEPTED _____ _____
CHIEF STRUCTURES DESIGN ENGINEER DATE

STRUCTURE B-13-866

BADGER STATE TRAIL OVER MCKEE ROAD

COUNTY DANE | ~~TOWN~~/CITY/~~VILLAGE~~ FITCHBURG

DESIGN SPEC. AASHTO LRFD BRIDGE DESIGN SPECIFICATIONS

DESIGNED BY	KPB	DESIGN CK'D.	BMO	DRAWN BY	DTH	PLANS CK'D.	BMO

GENERAL PLAN

SHEET 1 OF 14

FILE NAME : S:\MAD\1200--1299\1275\027\Micros\PLAN\080501_gp.dgn

DRAFT

STATE PROJECT NUMBER
5849-02-02

GENERAL NOTES

DRAWINGS SHALL NOT BE SCALED.

BAR STEEL REINFORCEMENT SHALL BE EMBEDDED 2" CLEAR UNLESS SHOWN OR NOTED OTHERWISE.

THE FIRST OR FIRST TWO DIGITS OF THE BAR MARK SIGNIFIES THE BAR SIZE.

BEVEL EXPOSED EDGES OF CONCRETE ¾" UNLESS NOTED OTHERWISE.

THE TRUSS SHALL BE ANCHORED TO THE ABUTMENTS IN A MANNER TO:
- ALLOW THERMAL MOVEMENTS ALONG ℄ OF THE BIKE PATH.
- PREVENT HORIZONTAL TRANSLATION OF THE SUPERSTRUCTURE PERPENDICULAR TO THE ℄ OF THE BIKE PATH.

THE TRUSS SHALL BE CAMBERED TO OFFSET THE CALCULATED DEAD LOAD DEFLECTION PLUS AN AMOUNT EQUAL TO THE PROFILE GRADE LINE.

PROTECTIVE SCREENING, HANDRAIL, CONCRETE DECK AND REINFORCEMENT, CURBS, BEARINGS, AND ANCHOR BOLTS ARE INCLUDED IN THE BID ITEM "PREFABRICATED STEEL TRUSS PEDESTRIAN BRIDGE B-13-866 LRFD".

THE PAINT COLOR FOR THE STEEL TRUSS SHALL BE PANTONE MATCHING SYSTEM COLOR PMS 364 (GREEN).

TRUSS AND CONCRETE DECK SHALL BE DESIGNED TO ACCOMODATE A 1¾ -INCH STRIP SEAL JOINT. THEREFORE THE TRUSS FABRICATOR SHALL COORDINATE WITH THE JOINT FABRICATOR TO OBTAIN NECESSARY JOINT AND ANCHORAGE DETAILS. SEE SHEET 11 FOR GENERAL JOINT INFORMATION.

ALL ITEMS ASSOCIATED WITH THE BRIDGE LIGHTING ARE INCLUDED IN THE ROADWAY BID ITEMS. CONDUIT LOCATIONS SHOWN ON THE BRIDGE PLANS ARE PROVIDED FOR GENERAL INFORMATION ONLY.

INTERMEDIATE ARCHES AND TOP CHORD MUST BE HSS TUBES OF THE SAME WIDTH AND DEPTH, BUT MAY HAVE DIFFERENT WALL THICKNESSES.

TRUSS SHALL BE DESIGNED AS SIMPLE SPAN BETWEEN ABUTMENTS. ARCHES SHALL BE FABRICATED TO A PARABOLIC CURVE.

PROTECTIVE SURFACE TREATMENT TO BE APPLIED TO THE ENTIRE TOP OF DECK SURFACE AND THE TOP AND FRONT FACE OF THE CURB.

WALLS R-13-332 AND R-13-333 WILL BE CONSTRUCTED CONCURRENTLY WITH BRIDGE B-13-866. CONSTRUCTION SEQUENCE FOR THE MSE WALL AND SOIL REINFORCEMENT MUST BE COORDINATED WITH ABUTMENT CONSTRUCTION.

FILLER SHALL CONFORM TO THE REQUIREMENTS OF AASHTO DESIGNATION M153 TYPES I, II OR III OR AASHTO DESIGNATION M213.

ANCHOR BOLTS, BEARINGS, AND THEIR LOCATION ON THE SUBSTRUCTURE UNITS SHALL BE PROVIDED BY THE BRIDGE MANUFACTURER AND INCLUDED IN THE BID ITEM "PREFABRICATED STEEL TRUSS PEDESTRIAN BRIDGE B-13-866 LRFD."

IF CROSS SECTION OF PEDESTRIAN BRIDGE DIFFERS FROM THAT SHOWN, THE ABUTMENT SHALL BE MODIFIED TO ACCOMODATE THE CHANGE. MODIFICATIONS TO THE ABUTMENTS SHALL BE APPROVED BY THE DESIGN ENGINEER.

FLOOR BEAM AND STRINGER SYSTEM IS ACCEPTABLE.

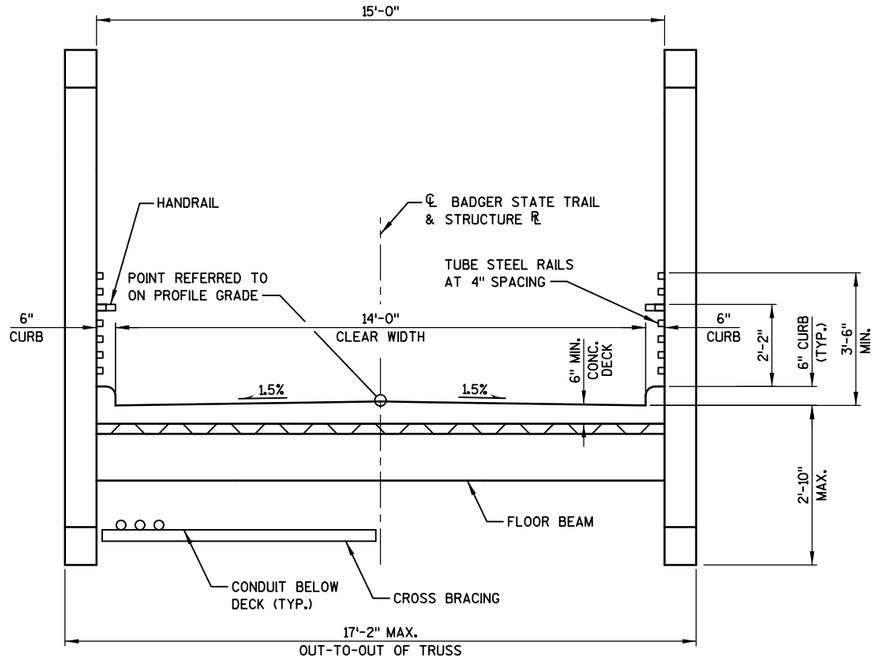

CROSS SECTION THRU TRUSS STRUCTURE

(LOOKING NORTH)

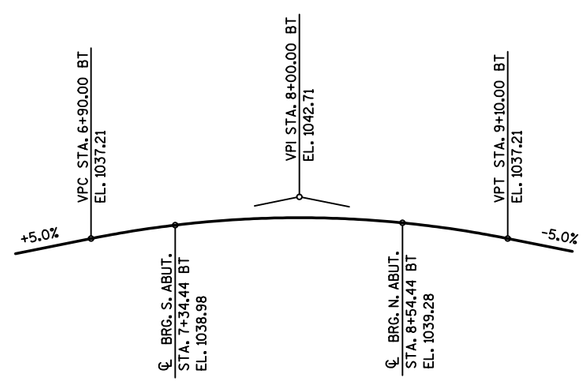

PROFILE GRADE LINE

TOTAL ESTIMATED QUANTITIES

BID ITEM	BID ITEMS	UNIT	TOTALS
206.1000	EXCAVATION FOR STRUCTURES BRIDGE B-13-866	LS	1
210.1500	BACKFILL STRUCTURE TYPE A	TONS	190
415.0410	CONCRETE PAVEMENT APPROACH SLAB	SY	26
502.0100	CONCRETE MASONRY BRIDGES	CY	60
502.3100	EXPANSION DEVICE B-13-866	LF	28
502.3200	PROTECTIVE SURFACE TREATMENT	SY	244
505.0400	BAR STEEL REINFORCEMENT HS STRUCTURES	LB	3,280
505.0600	BAR STEEL REINFORCEMENT HS COATED STRUCTURES	LB	1,980
516.0500	RUBBERIZED MEMBRANE WATERPROOFING	SY	10
517.1000.001	PAINTING EPOXY SYSTEM STEEL TRUSS B-13-866	LS	1
517.1010.S.001	CONCRETE STAINING B-13-866	SF	686
517.1050.S.001	ARCHITECTURAL SURFACE TREATMENT B-13-866	SF	336
550.1100	PILING STEEL HP 10-INCH X 42 LB	LF	315
604.0400	SLOPE PAVING CONCRETE	SY	16
506.8005.S	PREFABRICATED STEEL TRUSS PEDESTRIAN BRIDGE B-13-866 LRFD	LS	1
SPV.0105.151	B-13-866 LIGHTING	LS	1
SPV.0165.154	ABUTMENT BACKWALL SOIL REINFORCEMENT	SF	352
	NON-BID ITEMS		
	FILLER	SIZE	3/4"
	EXPANDED POLYSTYRENE	SIZE	1"

ALL ITEMS ARE CATEGORY 0020

8

8

NO.	DATE	REVISION	BY

STATE OF WISCONSIN
DEPARTMENT OF TRANSPORTATION

STRUCTURE B-13-866

DRAWN BY DTH | PLANS CK'D. BMO

CROSS SECTION GENERAL NOTES & DETAILS

SHEET 2

FILE NAME : S:\MAD\1200--1299\1275\027\Micros\PLAN\080502_xs.dgn

BORING	DATE COMPLETED	NORTHING (Y)	EASTING (X)
BB-1	1/9/2019	461,131	800,468
BB-2	1/9/2019	461,301	800,467
U-1	11/27/2017	461,301	800,537

BORINGS COMPLETED BY: SOILS & ENGINEERING SERVICES, INC.
REPORT COMPLETED BY: SOILS & ENGINEERING SERVICES, INC.
ALL COORDINATES REFERENCED TO DANE COUNTY COORDINATE SYSTEM

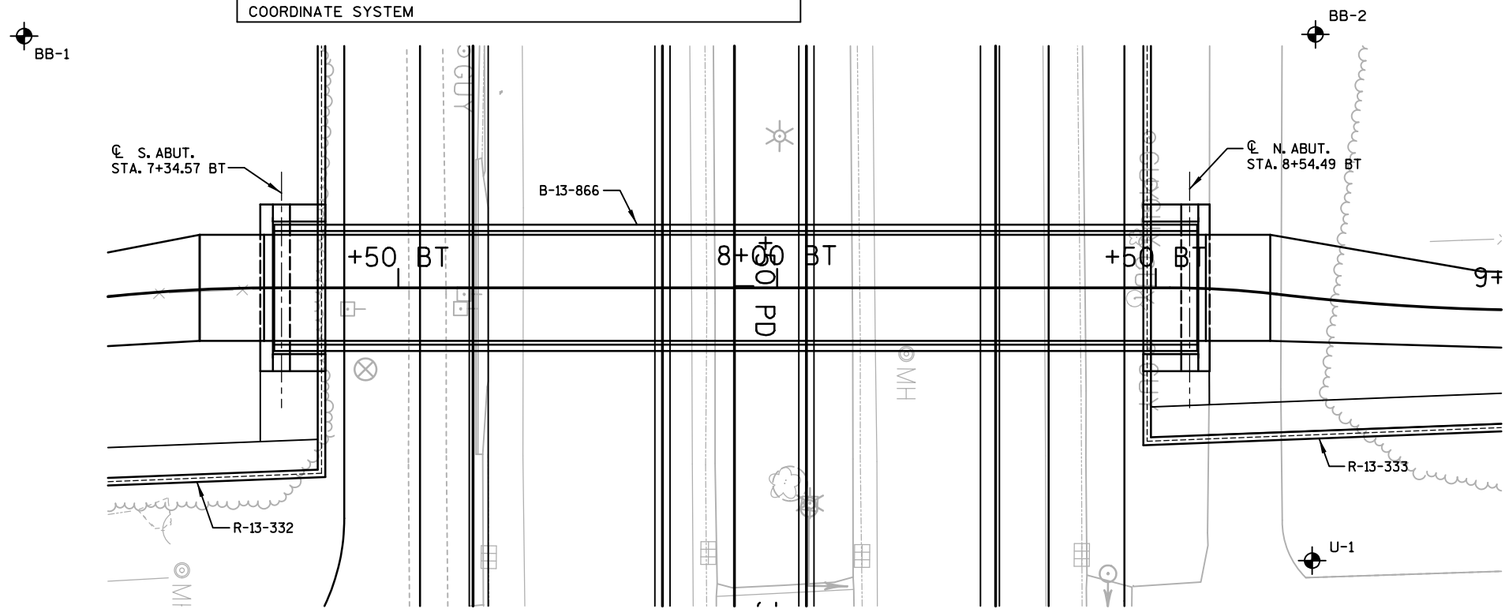

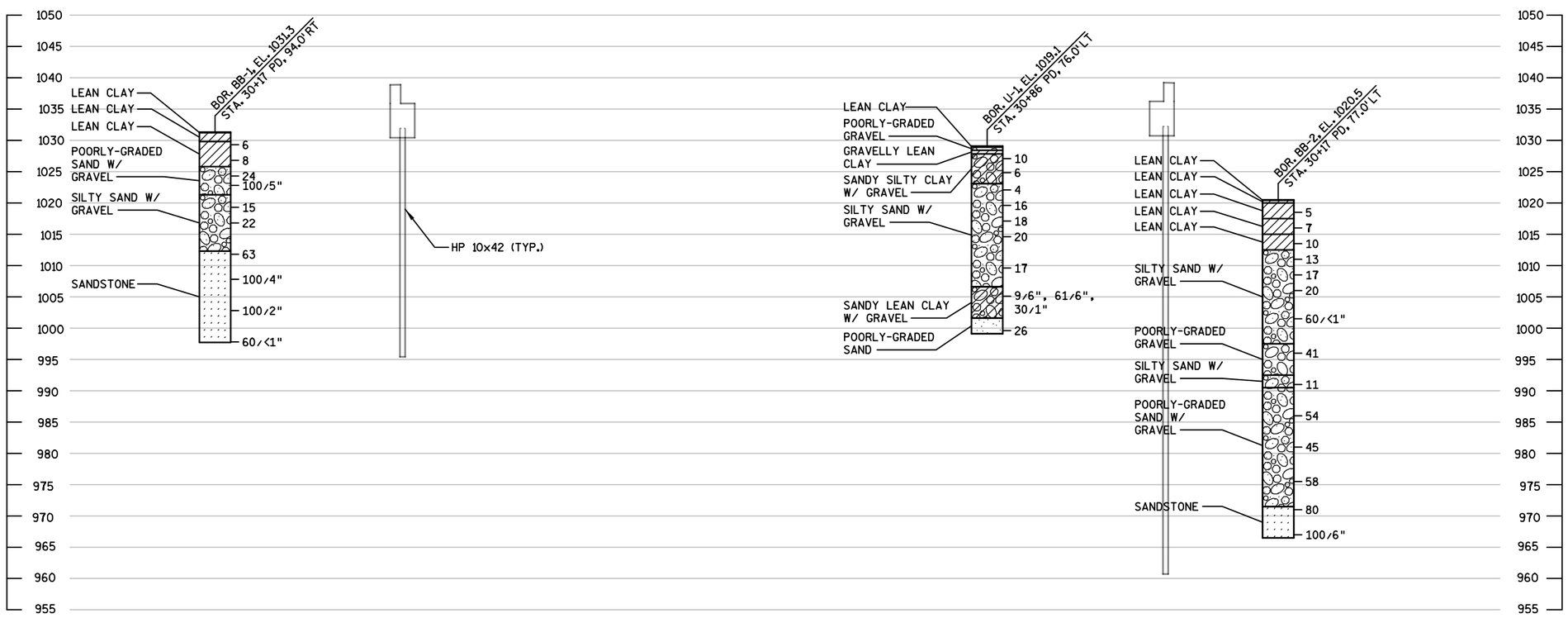

STATE PROJECT NUMBER

DRAFT

58[illegible]-02-02

MATERIAL SYMBOLS

ASPHALT, TOPSOIL, PEAT, CONCRETE, FILL, GRAVEL, SAND, CLAY, SILT, BOULDERS OR COBBLES, LIMESTONE, BEDROCK (UNKNOWN), SHALE, SANDSTONE, IGNEOUS/ META

LEGEND OF BORING

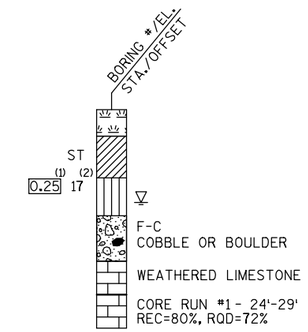

(1) UNCONFINED STRENGTH, AS DETERMINED BY A POCKET PENETROMETER (TSF)

(2) UNLESS OTHERWISE, SPECIFIED THE SPT 'N' VALUE IS BASED ON AASHTO T-206, STANDARD PENETRATION TEST. THE SPT 'N' VALUE PRESENTED HAS NOT BEEN CORRECTED FOR OVERBURDEN PRESSURE OR HAMMER EFFICIENCY.

GROUND WATER ELEVATION

- AT TIME OF DRILLING
- END OF DRILLING
- AFTER DRILLING

ABBREVIATIONS

F-FINE M-MEDIUM C-COARSE ST-SHELBY TUBE

SUBSURFACE EXPLORATION FOR FOUNDATION DESIGN AND BIDDERS INFORMATION

BORINGS WERE COMPLETED AT POINTS APPROXIMATELY AS INDICATED ON THIS DRAWING TO OBTAIN INFORMATION CONCERNING THE CHARACTER OF SUBSURFACE MATERIALS FOUND AT THE SITE. BECAUSE THE INVESTIGATED DEPTHS ARE LIMITED AND THE AREA OF THE BORINGS IS VERY SMALL IN RELATION TO THE ENTIRE SITE, THE WISCONSIN DEPARTMENT OF TRANSPORTATION DOES NOT WARRANT SIMILAR SUBSURFACE CONDITIONS BELOW, BETWEEN, OR BEYOND THESE BORINGS. VARIATIONS IN SOIL CONDITIONS SHOULD BE EXPECTED AND FLUCTUATIONS IN GROUNDWATER LEVELS MAY OCCUR.

NO.	DATE	REVISION	BY

STATE OF WISCONSIN
DEPARTMENT OF TRANSPORTATION

STRUCTURE B-13-866

DRAWN BY DTH PLANS CK'D. BMO

SUBSURFACE EXPLORATION

SHEET 3

8

8

SCALE =

FILE NAME : S:\MAD\1200--1299\1275\027\Micros\PLAN\080503_xx.dgn

DRAFT

STATE PROJECT NUMBER
5849-02-02

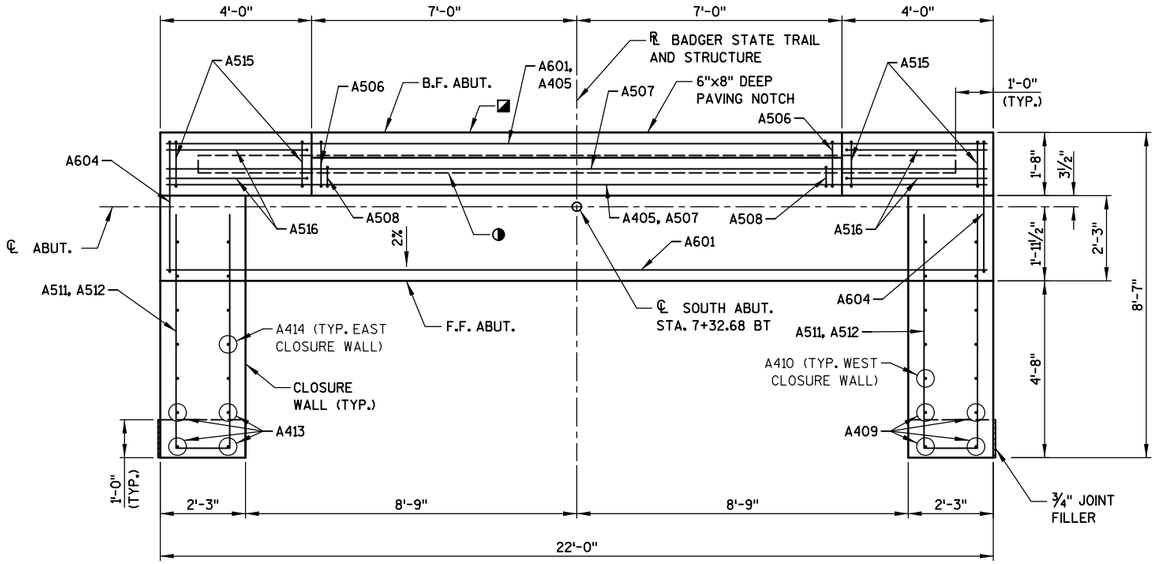

PLAN

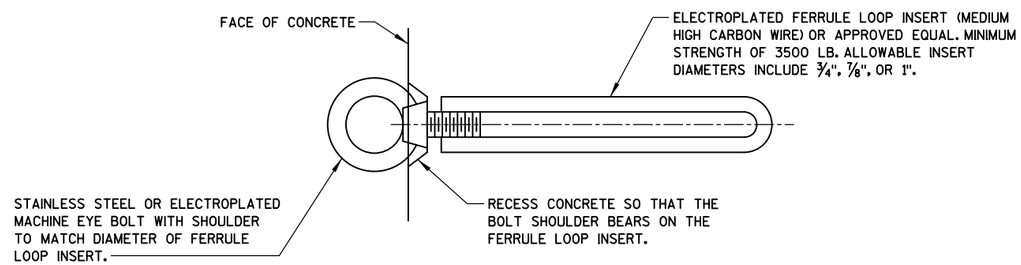

EYE BOLT DETAIL

COST INCIDENTAL TO BID ITEM "CONCRETE MASONRY BRIDGES".

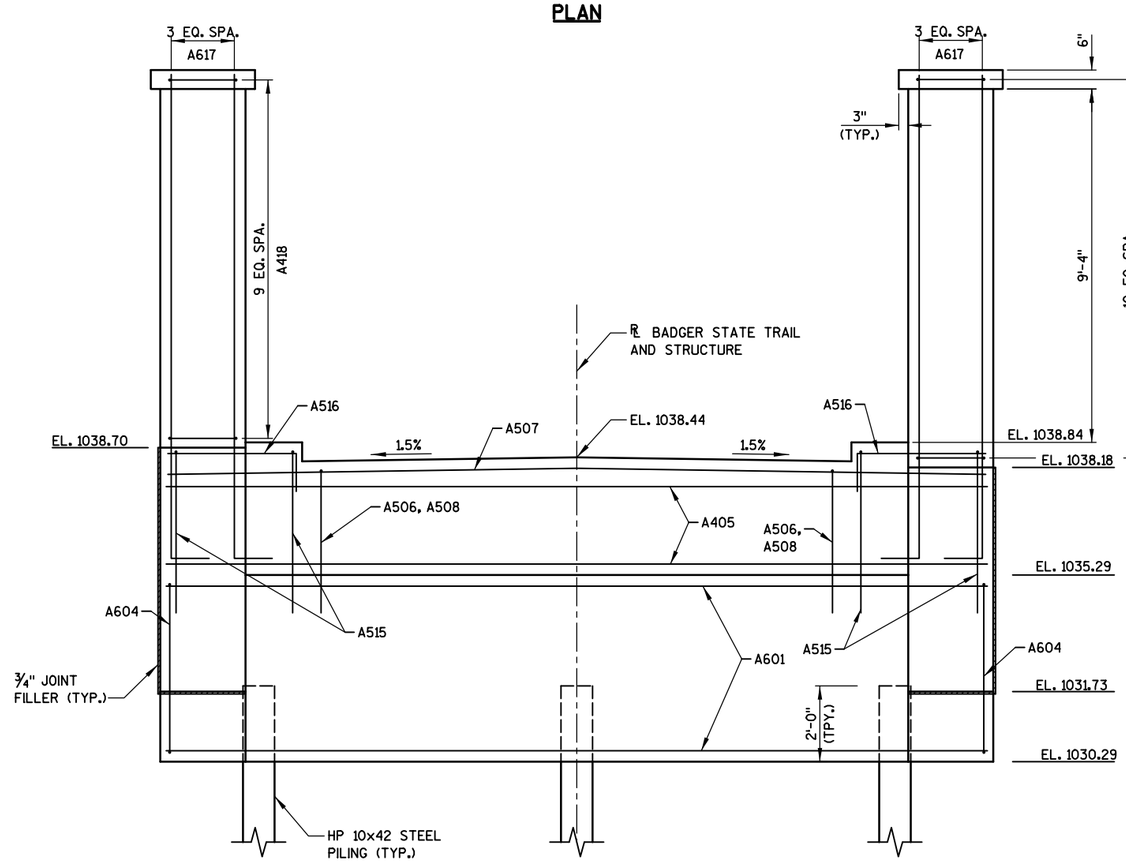

ELEVATION

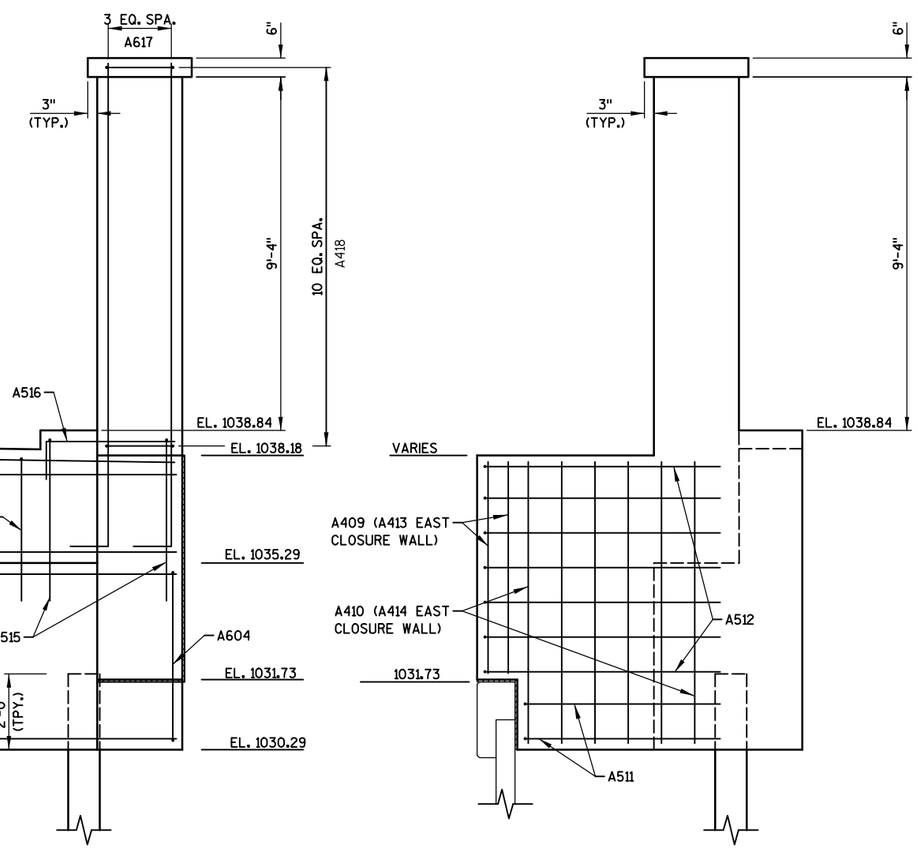

NOTES

SEE SHEET 8 FOR PILE SPLICE DETAILS.

SEE SHEET 5 FOR REINFORCING DETAILS.

ADJUST AXXX BARS TO AVOID PILE INTERFERENCE.

PROVIDE EYE BOLT FALL PROTECTION AT EACH ABUTMENT. LOCATE EYE BOLTS 1'-0" BELOW THE TOP OF ABUTMENT BODY AND SPACE AT 6'-0" MAX ACROSS THE FACE OF THE ABUTMENT.

LEGEND

◪ 18" RUBBERIZED MEMBRANE WATERPROOFING. SEAL ALL HORIZONTAL AND VERTICAL JOINTS ON BACK FACE.

◑ HORIZONTAL CONSTRUCTION JOINT FORMED BY A BEVELED 2"x6".

NO.	DATE	REVISION	BY

STATE OF WISCONSIN
DEPARTMENT OF TRANSPORTATION
STRUCTURES DESIGN SECTION

STRUCTURE B-13-866

DRAWN BY DTH | PLANS CK'D. BMO

SOUTH ABUTMENT

SHEET 4 285

8

8

FILE NAME : S:\MAD\1200--1299\1275\027\Micros\PLAN\080504_cd.dgn

DRAFT

STATE PROJECT NUMBER
5849-02-02

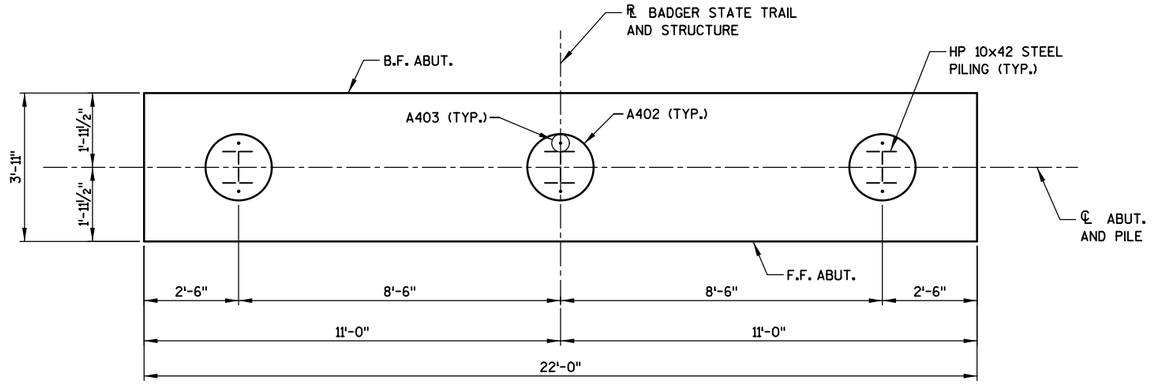

PILE PLAN

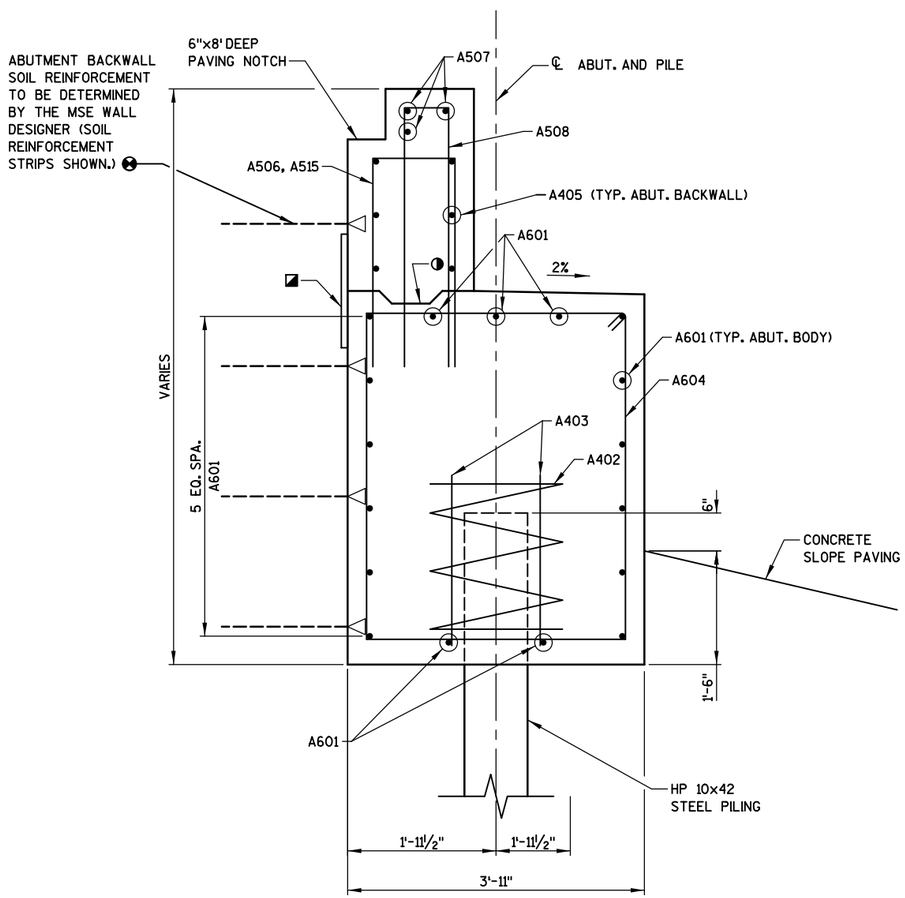

TYPICAL SECTION THRU ABUTMENT

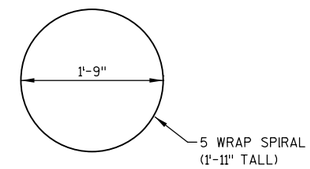

A402

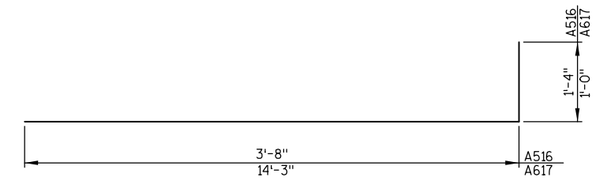

A516, A617

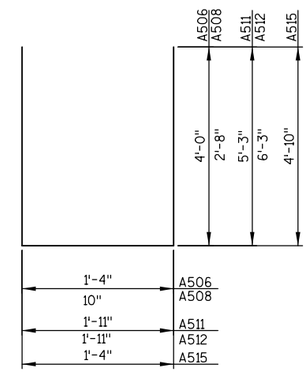

A506, A508, A511

A512, A515

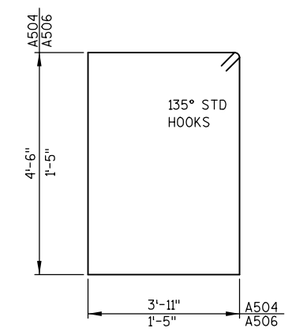

A604, A418

SOUTH ABUTMENT BILL OF BARS

UNCOATED: 1,630 LBS.
COATED: 990 LBS.

MARK	NO.	LENGTH	BENT	COAT	LOCATION
A601	17	21'-8"			BODY - HORIZONTAL - BTM., F.F., B.F., TOP
A402	3	28'-0"	X		BODY - PILES - SPIRAL
A403	6	2'-0"			BODY - PILES - VERTICAL
A604	23	17'-8"	X		BODY - STIRRUP - VERTICAL
A405	8	21'-8"		X	BACKWALL - HORIZONTAL - F.F., B.F.
A506	15	9'-1"	X	X	BACKWALL - TOP - VERTICAL
A507	3	21'-8"		X	BACKWALL - TOP - HORIZONTAL
A508	15	5'-11"	X	X	BACKWALL - TOP - VERTICAL
A409	4	5'-6"			WEST CLOSURE WALL - VERTICAL
A410	10	7'-5"			WEST CLOSURE WALL - VERTICAL
A511	4	12'-2"	X		CLOSURE WALLS - HORIZONTAL
A512	15	14'-2"	X		CLOSURE WALLS - HORIZONTAL
A413	4	6'-1"			EAST CLOSURE WALL - VERTICAL
A414	10	7'-11"			EAST CLOSURE WALL - VERTICAL
A515	10	10'-9"	X	X	BACKWALL - TOP - VERTICAL
A516	6	4'-11"	X	X	BACKWALL - TOP - HORIZONTAL
A617	16	14'-2"	X	X	PEDESTAL - VERTICAL
A418	21	6'-2"	X	X	PEDESTAL - HORIZONTAL

NOTE: THE FIRST OR FIRST TWO DIGITS OF A BAR MARK SIGNIFIES THE BAR SIZE. DIMENSIONS FOR BENDING ARE OUT TO OUT OF BAR.

NOTES

ABUTMENT TO BE SUPPORTED ON HP 10x42 STEEL PILING DRIVEN TO A REQUIRED DRIVING RESISTANCE OF 180 TONS PER PILE. ESTIMATED PILE LENGTH IS 35 FEET.

LEGEND

- 18" RUBBERIZED MEMBRANE WATERPROOFING SEAL ALL HORIZONTAL AND VERTICAL JOINTS ON BACK FACE.
- HORIZONTAL CONSTRUCTION JOINT KEYWAY FORMED BY A BEVELED 2"x6".
- UNACTORED SUPERSTRUCTURE LATERAL LOADS TRANSFERRED TO THE ABUTMENT ARE TAKEN TO BE KIPS PER FOOT OF ABUTMENT LENGTH. THE VALUES ARE TO BE USED FOR THE LRFD DESIGN OF THE ABUTMENT BACKWALL SOIL REINFORCEMENT BY THE MSE WALL MANUFACTURER. THE FOLLOWING AASHTO LINE LOADS SHALL BE INCLUDED IN THE WALL DESIGN:

BR = 0.23 KLF WS = 1.48 KLF
TU = 0.773 KLF WL = 0.00 KLF

NO.	DATE	REVISION	BY

STATE OF WISCONSIN
DEPARTMENT OF TRANSPORTATION
STRUCTURES DESIGN SECTION

STRUCTURE B-13-866

DRAWN BY DTH PLANS CK'D. BMO

SOUTH ABUTMENT DETAILS

SHEET 5
286

8

8

FILE NAME : S:\MAD\1200--1299\1275\027\Micros\PLAN\080505_cd.dgn

DRAFT

STATE PROJECT NUMBER
5849-02-02

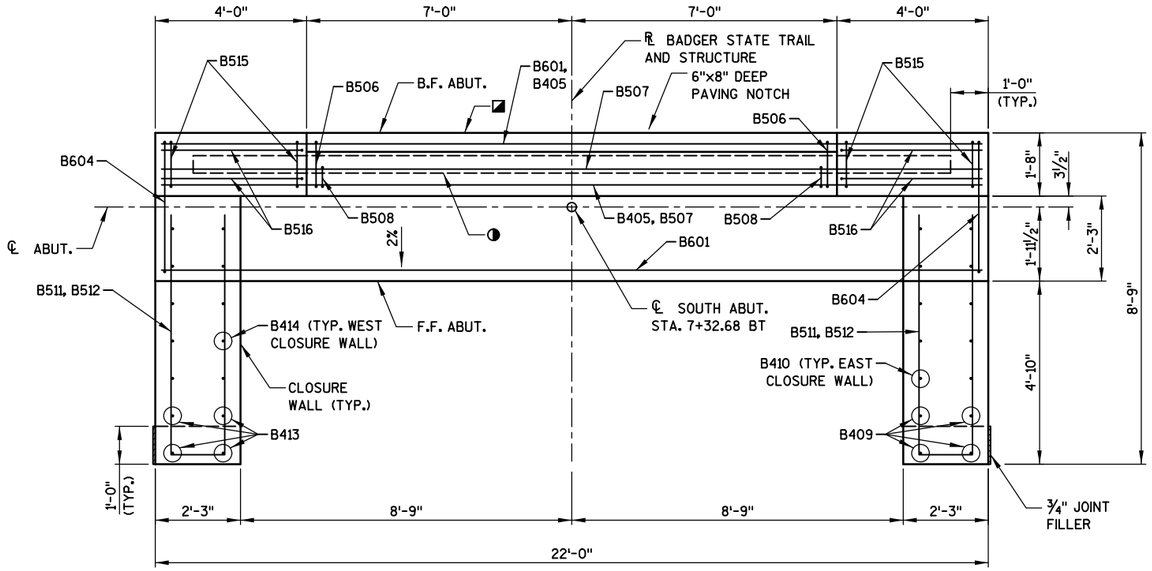

PLAN

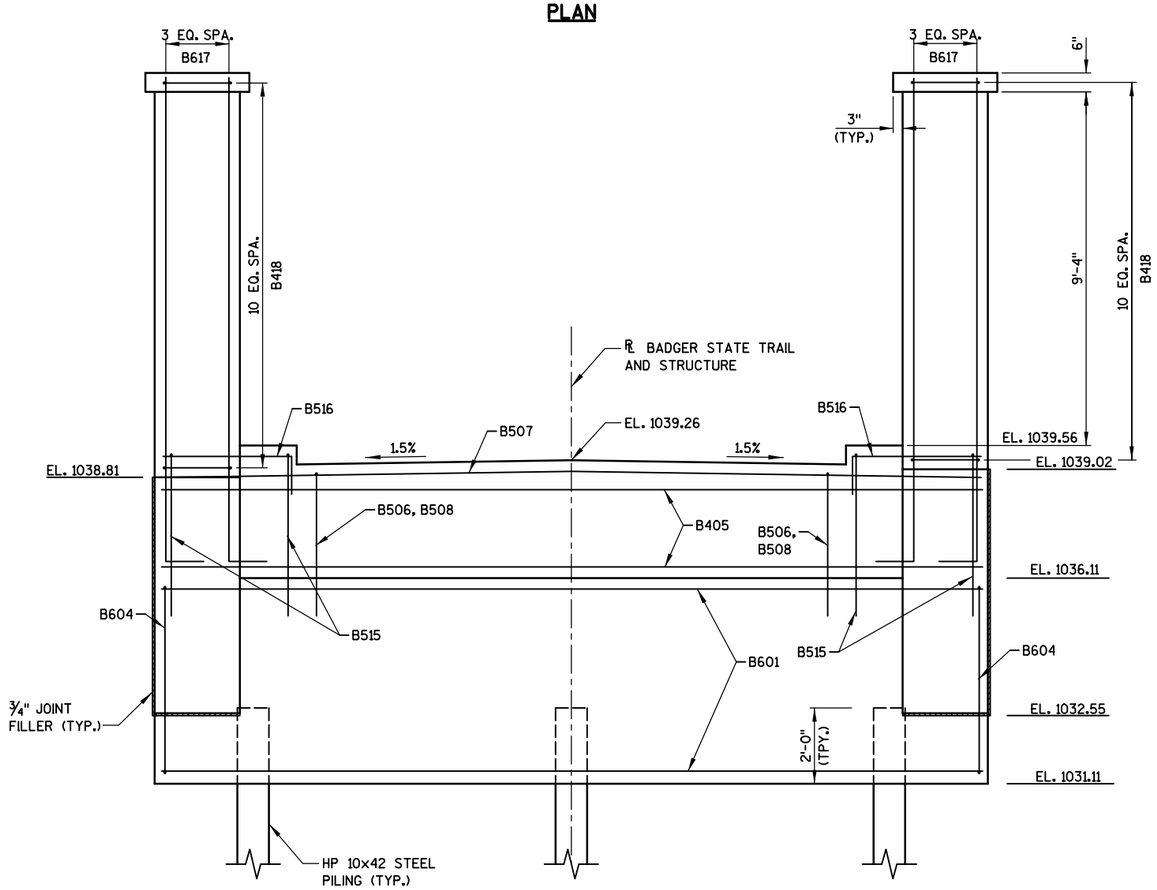

ELEVATION

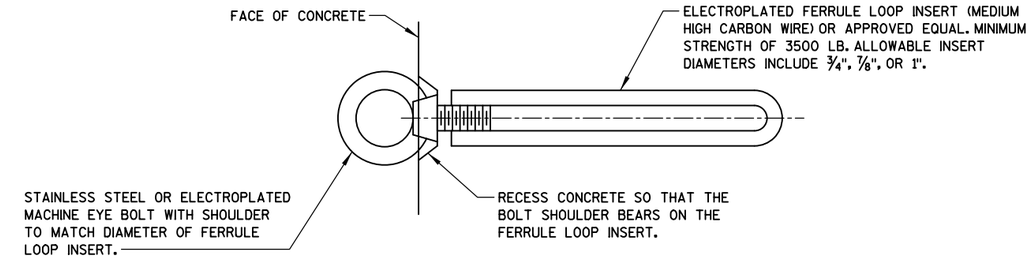

EYE BOLT DETAIL

COST INCIDENTAL TO BID ITEM "CONCRETE MASONRY BRIDGES".

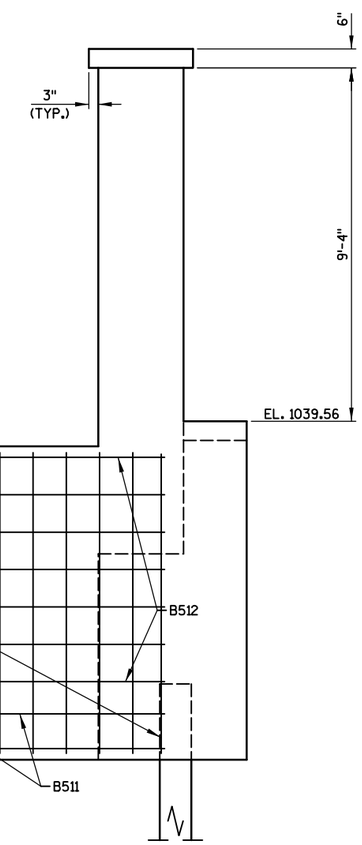

NOTES

SEE SHEET 8 FOR PILE SPLICE DETAILS.

SEE SHEET 5 FOR REINFORCING DETAILS.

ADJUST AXXX BARS TO AVOID PILE INTERFERENCE.

PROVIDE EYE BOLT FALL PROTECTION AT EACH ABUTMENT. LOCATE EYE BOLTS 1'-0" BELOW THE TOP OF ABUTMENT BODY AND SPACE AT 6'-0" MAX ACROSS THE FACE OF THE ABUTMENT.

LEGEND

◪ 18" RUBBERIZED MEMBRANE WATERPROOFING. SEAL ALL HORIZONTAL AND VERTICAL JOINTS ON BACK FACE.

◑ HORIZONTAL CONSTRUCTION JOINT FORMED BY A BEVELED 2"x6".

NO.	DATE	REVISION	BY

STATE OF WISCONSIN
DEPARTMENT OF TRANSPORTATION
STRUCTURES DESIGN SECTION

STRUCTURE B-13-866

DRAWN BY DTH | PLANS CK'D. BMO

NORTH ABUTMENT

SHEET 6

8

8

FILE NAME : S:\MAD\1200--1299\1275\027\Micros\PLAN\080506_cd.dgn

DRAFT

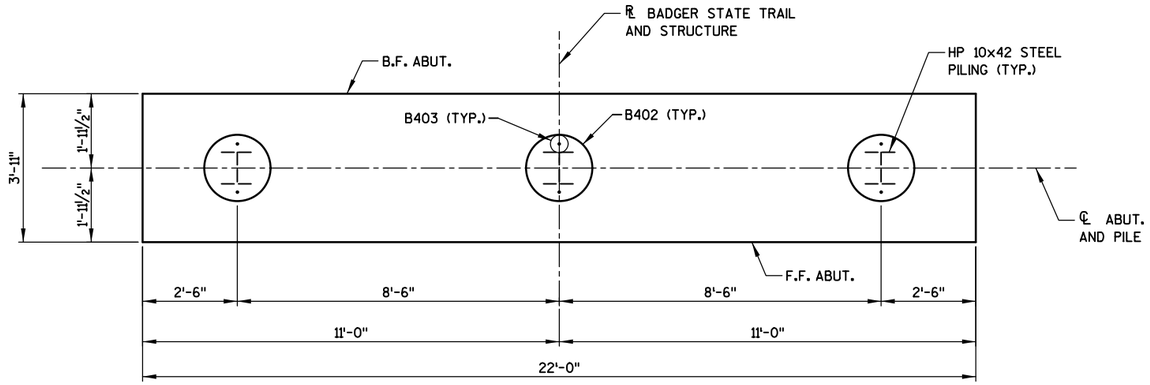

PILE PLAN

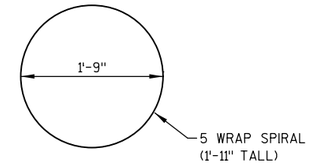

B402

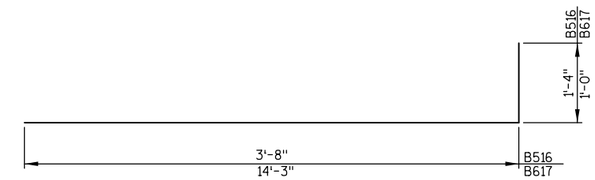

B516, B617

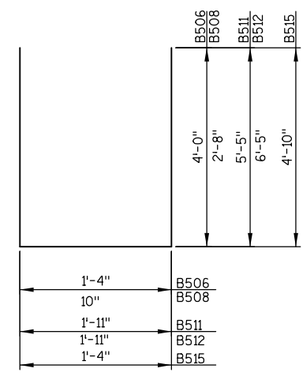

B506, B508, B511

B512, B515

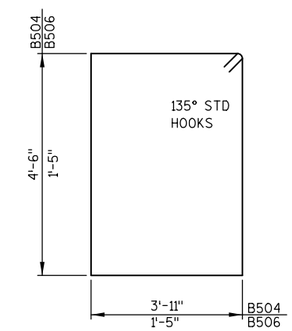

B604, B418

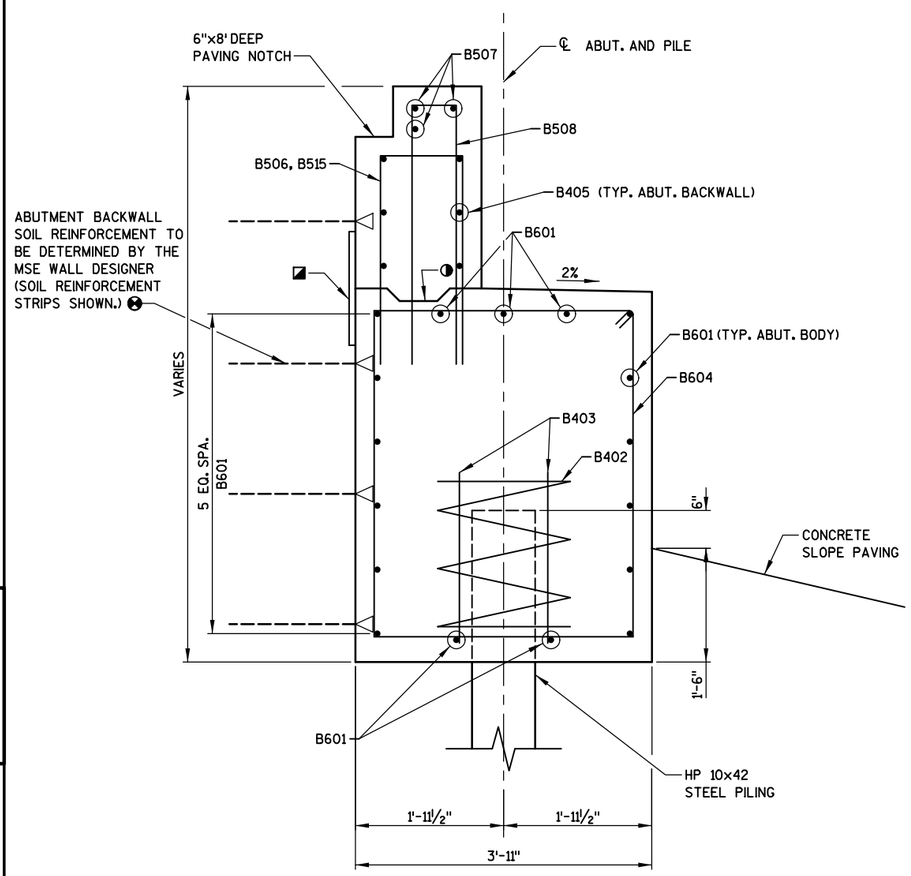

TYPICAL SECTION THRU ABUTMENT

NORTH ABUTMENT BILL OF BARS

UNCOATED: 1,640 LBS.
COATED: 1,000 LBS.

MARK	NO.	LENGTH	BENT	COAT	LOCATION
B601	17	21'-8"			BODY - HORIZONTAL - BTM., F.F., B.F., TOP
B402	3	28'-0"	X		BODY - PILES - SPIRAL
B403	6	2'-0"			BODY - PILES - VERTICAL
B604	23	17'-8"	X		BODY - STIRRUP - VERTICAL
B405	8	21'-8"		X	BACKWALL - HORIZONTAL - F.F., B.F.
B506	15	9'-1"	X	X	BACKWALL - TOP - VERTICAL
B507	3	21'-8"		X	BACKWALL - TOP - HORIZONTAL
B508	15	5'-11"	X	X	BACKWALL - TOP - VERTICAL
B409	4	6'-0"			EAST CLOSURE WALL - VERTICAL
B410	10	7'-11"			EAST CLOSURE WALL - VERTICAL
B511	4	12'-6"	X		CLOSURE WALLS - HORIZONTAL
B512	15	14'-6"	X		CLOSURE WALLS - HORIZONTAL
B413	4	5'-10"			WEST CLOSURE WALL - VERTICAL
B414	10	7'-9"			WEST CLOSURE WALL - VERTICAL
B515	10	10'-9"	X	X	BACKWALL - TOP - VERTICAL
B516	6	4'-11"	X	X	BACKWALL - TOP - HORIZONTAL
B617	16	14'-2"	X	X	PEDESTAL - VERTICAL
B418	22	6'-2"	X	X	PEDESTAL - HORIZONTAL

NOTE: THE FIRST OR FIRST TWO DIGITS OF A BAR MARK SIGNIFIES THE BAR SIZE.
DIMENSIONS FOR BENDING ARE OUT TO OUT OF BAR.

NOTES

ABUTMENT TO BE SUPPORTED ON HP 10x42 STEEL PILING DRIVEN TO A REQUIRED DRIVING RESISTANCE OF 180 TONS PER PILE. ESTIMATED PILE LENGTH IS 70 FEET.

LEGEND

◪ 18" RUBBERIZED MEMBRANE WATERPROOFING SEAL ALL HORIZONTAL AND VERTICAL JOINTS ON BACK FACE.

◑ HORIZONTAL CONSTRUCTION JOINT KEYWAY FORMED BY A BEVELED 2"x6".

⊗ UNACTORED SUPERSTRUCTURE LATERAL LOADS TRANSFERRED TO THE ABUTMENT ARE TAKEN TO BE KIPS PER FOOT OF ABUTMENT LENGTH. THE VALUES ARE TO BE USED FOR THE LRFD DESIGN OF THE ABUTMENT BACKWALL SOIL REINFORCEMENT BY THE MSE WALL MANUFACTURER. THE FOLLOWING AASHTO LINE LOADS SHALL BE INCLUDED IN THE WALL DESIGN:

BR = 0.23 KLF WS = 1.48 KLF
TU = 0.773 KLF WL = 0.00 KLF

NO.	DATE	REVISION	BY

STATE OF WISCONSIN
DEPARTMENT OF TRANSPORTATION
STRUCTURES DESIGN SECTION

STRUCTURE B-13-866

DRAWN BY DTH PLANS CK'D. BMO

NORTH ABUTMENT DETAILS

8

8

DRAFT

STATE PROJECT NUMBER
5849-02-02

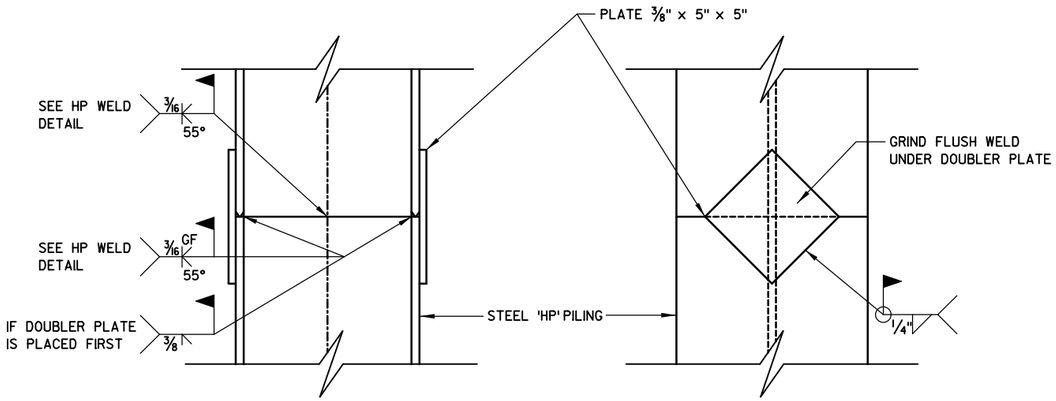

PILE SPLICE DETAILS

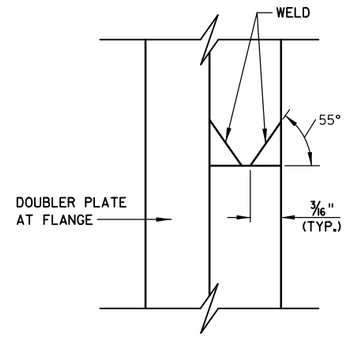

HP WELD DETAIL
FLANGE SHOWN, WEB SIMILAR

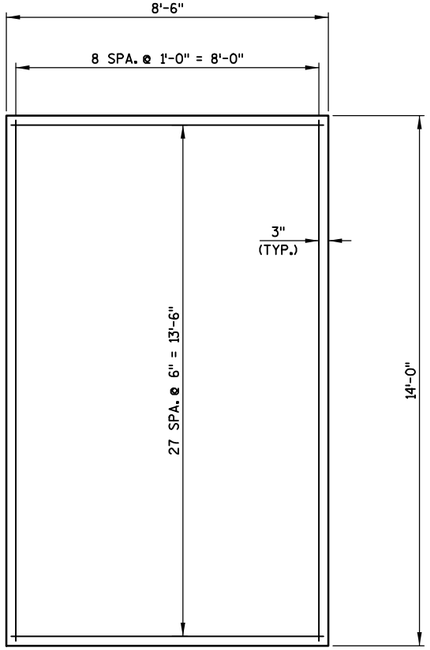

PLAN

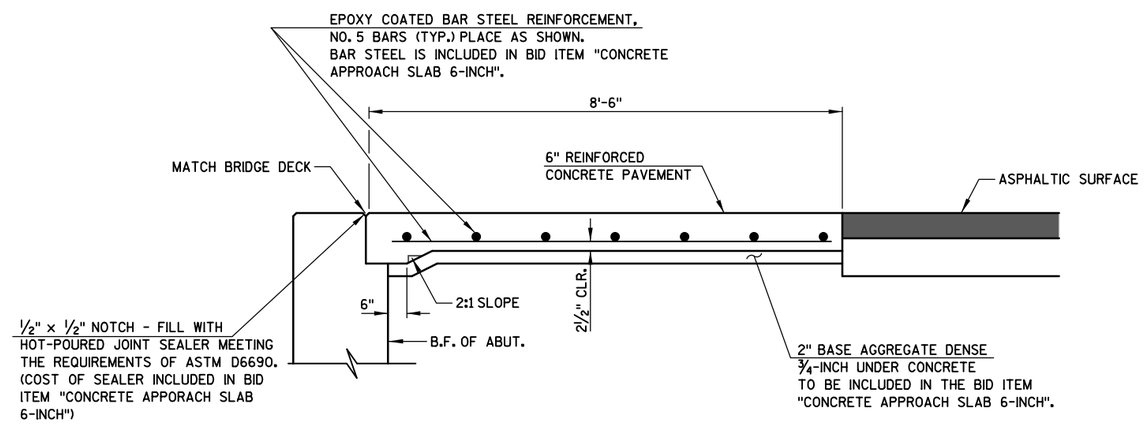

ELEVATION

CONCRETE PAVEMENT APPROACH SLAB SPECIAL

8

NO.	DATE	REVISION	BY

STATE OF WISCONSIN
DEPARTMENT OF TRANSPORTATION
STRUCTURES DESIGN SECTION

STRUCTURE B-13-866

DRAWN BY DTH | PLANS CK'D. BMO

ABUTMENT DETAILS

SHEET 8 289

FILE NAME : S:\MAD\1200--1299\1275\027\Micros\PLAN\080508_cd.dgn

DRAFT

STATE PROJECT NUMBER
5849-02-02

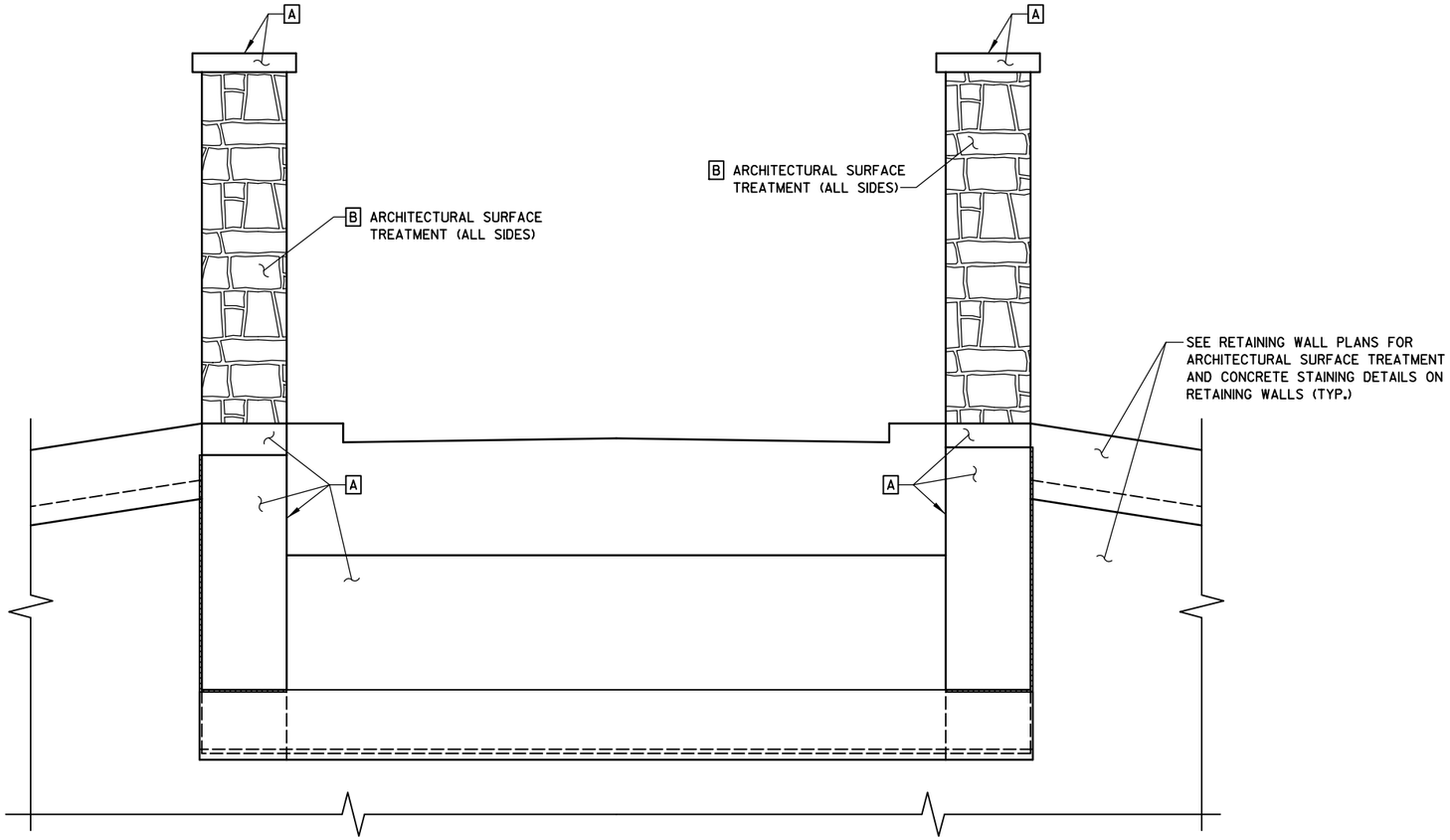

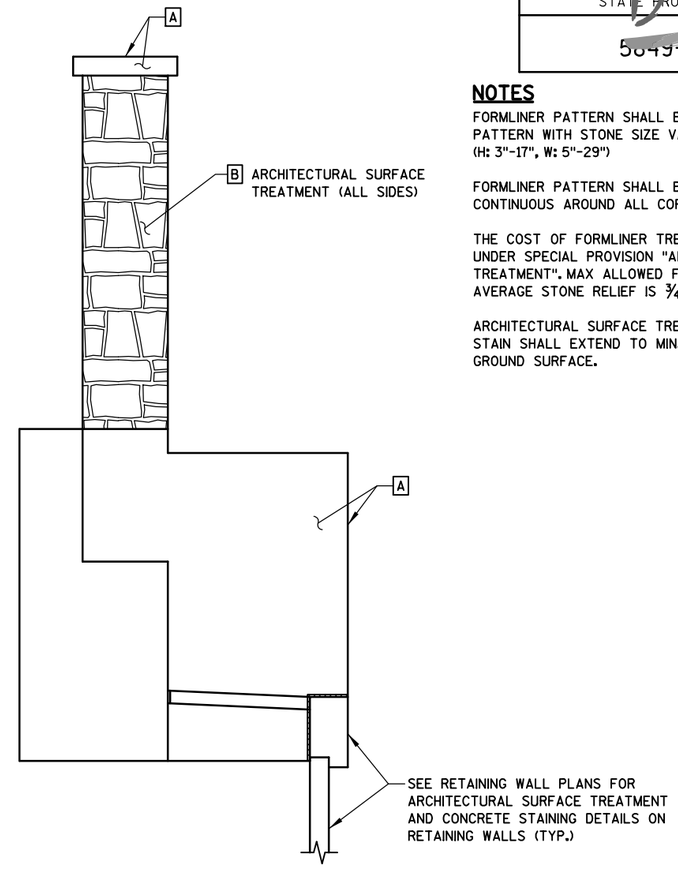

NOTES

FORMLINER PATTERN SHALL BE RANDOM ASHLAR PATTERN WITH STONE SIZE VARIED. (H: 3"-17", W: 5"-29")

FORMLINER PATTERN SHALL BE LEVEL AND CONTINUOUS AROUND ALL CORNERS.

THE COST OF FORMLINER TREATMENTS IS PAID FOR UNDER SPECIAL PROVISION "ARCHITECTURAL SURFACE TREATMENT". MAX ALLOWED FORMLINER RELIEF IS 2". AVERAGE STONE RELIEF IS ¾".

ARCHITECTURAL SURFACE TREATMENT AND CONCRETE STAIN SHALL EXTEND TO MIN. 1'-0" BELOW FINISHED GROUND SURFACE.

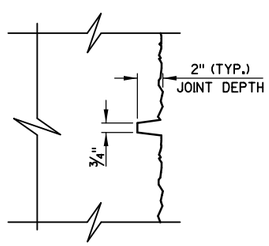

"MORTAR JOINT" DETAIL

APPLIES TO HORIZONTAL AND VERTICAL JOINTS

TOP OF DECK ELEVATIONS

LOCATION	WEST GUTTERLINE		C/L BRIDGE		EAST GUTTERLINE	
	7.00' LT		--		7.00' RT	
	STATION	ELEVATION	STATION	ELEVATION	STATION	ELEVATION
S. END OF DECK	7+33.59	1038.845	7+33.59	1038.95	7+33.59	1038.845
0.1L POINT	7+45.78	1039.185	7+45.78	1039.29	7+45.78	1039.185
0.2L POINT	7+57.96	1039.445	7+57.96	1039.55	7+57.96	1039.445
0.3L POINT	7+70.15	1039.645	7+70.15	1039.75	7+70.15	1039.645
0.4L POINT	7+82.34	1039.785	7+82.34	1039.89	7+82.34	1039.785
0.5L POINT	7+94.53	1039.845	7+94.53	1039.95	7+94.53	1039.845
0.6L POINT	8+06.71	1039.845	8+06.71	1039.95	8+06.71	1039.845
0.7L POINT	8+18.90	1039.765	8+18.90	1039.87	8+18.90	1039.765
0.8L POINT	8+31.09	1039.635	8+31.09	1039.74	8+31.09	1039.635
0.9L POINT	8+43.27	1039.395	8+43.27	1039.5	8+43.27	1039.395
N. END OF DECK	8+55.46	1039.155	8+55.46	1039.26	8+55.46	1039.155

ELEVATIONS SHOWN ARE FINISHED GRADE ELEVATIONS
STATIONS SHOWN ARE MEASURED ALONG BADGER STATE TRAIL ALIGNMENT

CONCRETE STAINING SCHEDULE

MARK	COLOR	LOCATION
A	FS 20122	ABUTMENT, CLOSURE WALLS, PEDESTAL CAPS
B	FS 33448	PEDESTALS

8

8

NO.	DATE	REVISION	BY

STATE OF WISCONSIN
DEPARTMENT OF TRANSPORTATION
STRUCTURES DESIGN SECTION

STRUCTURE B-13-866

DRAWN BY DTH | PLANS CK'D. BMO

SUPERSTRUCTURE ELEVATIONS & AESTHETIC DETAILS

SHEET 290

FILE NAME : S:\MAD\1200--1299\1275\027\Micros\PLAN\080509_cd.dgn

DRAFT

STATE PROJECT NUMBER
5849-02-02

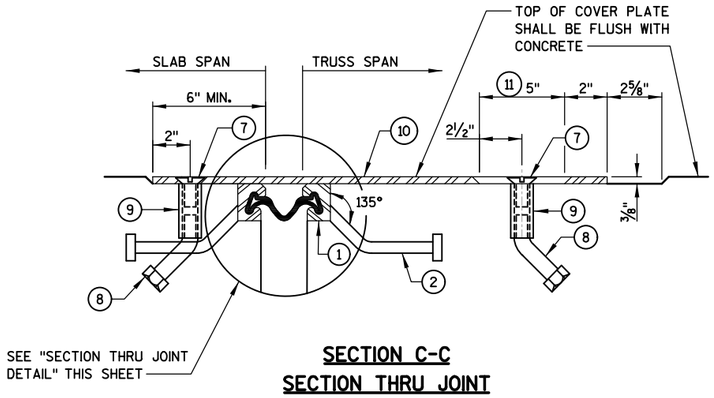

SECTION C-C
SECTION THRU JOINT

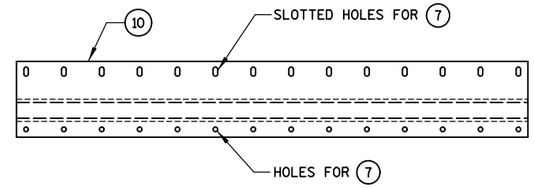

PLAN OF COVER PLATE WITH SLIP RESISTANT SURFACE

PLACE SLIP-RESISTANT SURFACE ON TOP WALKING SURFACE IN SHADED AREA

APPROVED SLIP-RESISTANT APPLIED SURFACES FOR STEEL PLATES		
PRODUCT	MANUFACTURER	CONTACT AT
SLIPNOT GRADE 2, STEEL	W.S. MOLNAR COMPANY	1-800-SLIPNOT
ALGRIP, STEEL	ROSS TECHNOLOGY CORP.	1-800-345-8170

LEGEND

1. NEOPRENE STRIP SEAL (4-INCH) & STEEL EXTRUSIONS.
2. STUDS ⅝"Φ x 6⅜" LONG AT 6" CENTERS. WELD TO EXTRUSIONS & BEND AS SHOWN AFTER WELDING.
7. ¾"Φ x 1½" STAINLESS STEEL SOCKET FLAT HEAD SCREWS WITH ANTI-SEIZE LUBRICANT. RECESS 1/16" BELOW PLATE SURFACE.
8. ¾"Φ x 4" GALVANIZED HEX HEAD BOLT. BEND 45°.
9. ¾"Φ x 2¼" GALVANIZED THREADED COUPLING.
10. GALVANIZED PLATE ⅜" x 2'-0" x LIMITS SHOWN, WITH HOLES FOR #7.
11. 1" x 5" SLOTTED COUNTERSUNK HOLE FOR #7. SLOT PARALLEL TO DIRECTION OF MOVEMENT.

BLOCK OUT CONCRETE 2" EACH SIDE OF JOINT OPENING.

GENERAL NOTES

NO FIELD SPLICE PERMITTED IN STEEL EXTRUSIONS. NO SPLICING PERMITTED IN NEOPRENE STRIP SEAL.

AFTER FABRICATION, BUT BEFORE SHIPMENT, STRAIGHTEN STEEL EXTRUSIONS SUCH THAT THEY SHALL BE FREE FROM WARP, TWIST & SWEEP.

FABRICATOR SHALL PROVIDE MEANS OF KEEPING GALVANIZED EXTRUSIONS CLEAN & SMOOTH DURING SHIPMENT AND PRIOR TO APPLYING LUBRICANT ADHESIVE FOR NEOPRENE GLAND INSTALLATION.

SANDBLAST PLATES & EXTRUSIONS AFTER FABRICATION IN ACCORDANCE WITH SSPC SP. #6 "COMMERCIAL BLAST CLEANING". AFTER BLAST CLEANING THE PLATES & EXTRUSIONS SHALL BE HOT DIPPED GALVANIZED.

ANCHOR SYSTEM #8 & #9 SHALL CONFORM TO ASTM A307 & SHALL BE GALVANIZED IN ACCORDANCE WITH ASTM A153 CLASS C & D.

THE EXPANSION DEVICE MANUFACTURER SHALL PROVIDE A MECHANISM TO SUPPORT THE JOINT IN PLACE DURING THE CONCRETE POUR.

STRIP SEAL EXPANSION JOINT ASSEMBLY, INCLUDING ANCHOR STUDS & HARDWARE WILL BE PAID FOR AT THE LUMP SUM PRICE BID FOR "EXPANSION DEVICE (B-13-866)".

COVER PLATE SHALL BE FABRICATED FROM TWO PLATES, JOINTED ALONG THE REFERENCE LINE, AND SHOP WELDED PRIOR TO GALVANIZING.

PLACE SLIP RESISTANT SURFACE ON TOP WALKING SURFACE. SEE DETAIL THIS SHEET.

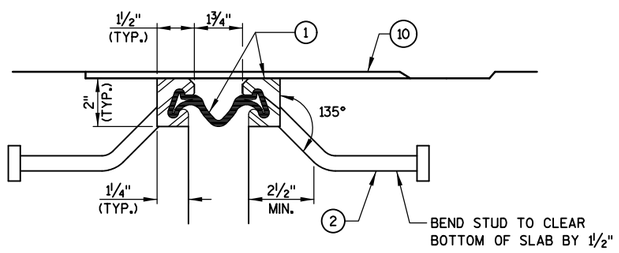

SECTION THRU JOINT DETAIL

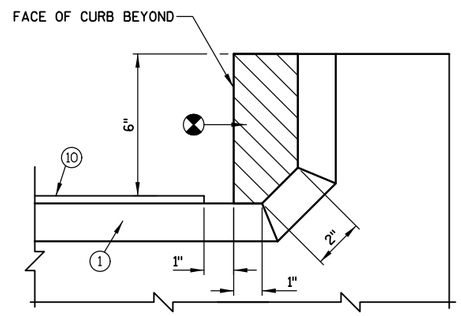

SECTION D-D
SECTION THRU JOINT AT CURB

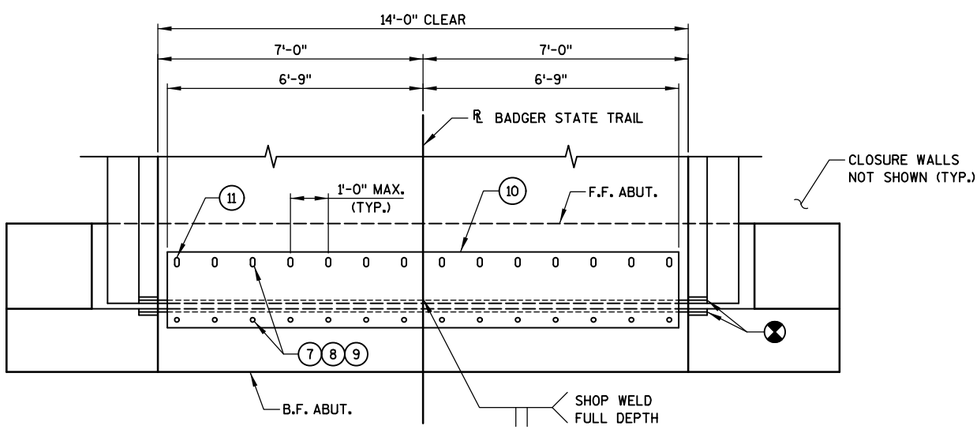

PLAN

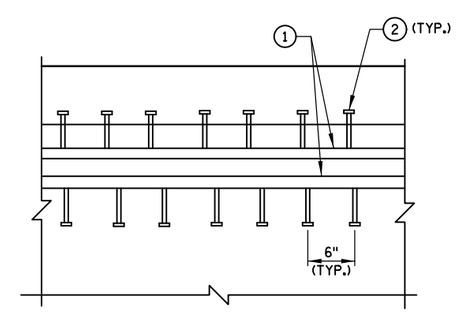

PART PLAN

8

8

NO.	DATE	REVISION	BY

STATE OF WISCONSIN
DEPARTMENT OF TRANSPORTATION
STRUCTURES DESIGN SECTION

STRUCTURE B-13-866

DRAWN BY DTH | PLANS CK'D. BMO

EXPANSION DEVICES

SHEET 10

FILE NAME : S:\MAD\1200--1299\1275\027\Micros\PLAN\080510_cd.dgn

DRAFT

STATE PROJECT NUMBER

5849-02-02

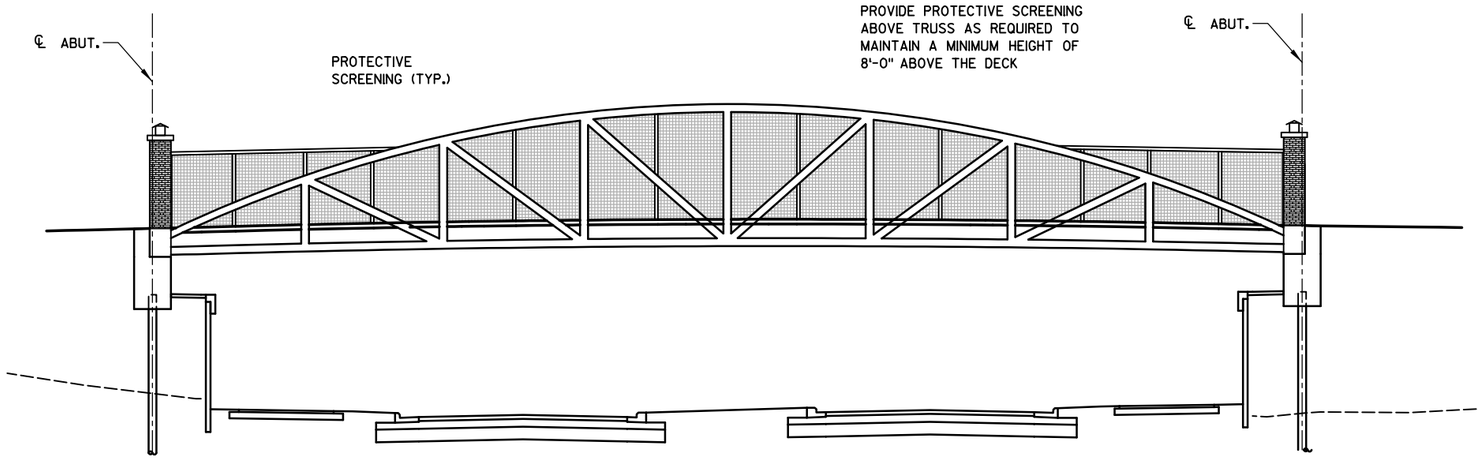

ELEVATION
(TYPICAL EACH SIDE)

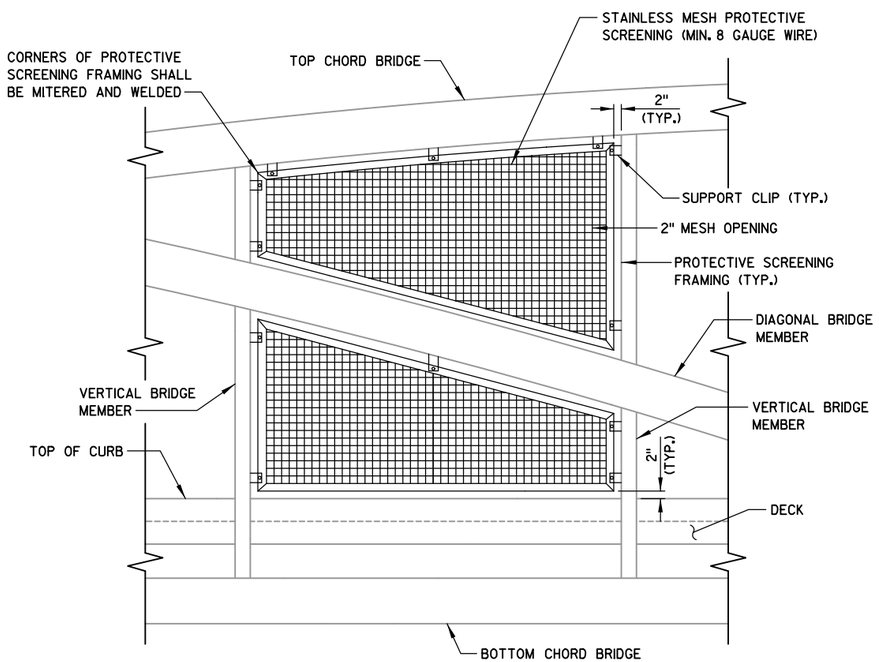

PROTECTIVE SCREENING

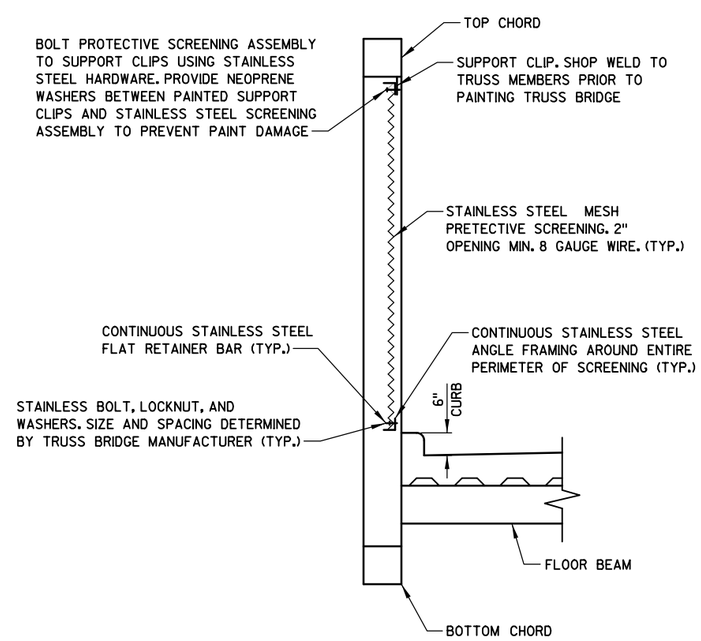

PROTECTIVE SCREENING DETAIL

NOTES

PROTECTIVE SCREENING SHALL BE PROVIDED BY THE PREFABRICATED BRIDGE MANUFACTURER. ALL WORK ASSOCIATED WITH PROTECTIVE SCREENING SHALL BE INCIDENTAL TO BID ITEM "PREFABRICATED STEEL TRUSS PEDESTRIAN BRIDGE".

STAINLESS STEEL MESH SHALL BE ORIENTED VERTICALLY/HORIZONTALLY ACROSS THE FULL LENGTH OF THE BRIDGE.

ALL MATERIALS FOR THE PROTECTIVE SCREENING, INCLUDING HARDWARE, SHALL BE STAINLESS STEEL.

ALTERNATE DETAILS FOR THE PROTECTIVE SCREENING MAY BE PROPOSED BY THE PREFABRICATED BRIDGE MANUFACTURER, BUT MUST BE APPROVED BY THE ENGINEER.

PROTECTIVE SCREENING SHALL BE PROVIDED ON BOTH SIDES OF THE STEEL TRUSS PEDESTRIAN BRIDGE FROM THE TOP OF THECURB TO THE TOP OF THE BRIDGE AS SHOWN FOR THE FULL LENGTH OF THE TRUSS BRIDGE.

PROVIDE PROTECTIVE SCREENING ABOVE THE TOP CHORD AS REQUIRED IN ORDER TO MAINTAIN A MINIMUM VERTICAL DIMENSION OF 8'-0" FROM THE TOP OF DECK TO TOP OF TRUSS OR TOP OF SCREENING. PROVIDE ADDITIONAL FRAMING ABOVE THE TRUSS AS REQUIRED TO SUPPORT THE PROTECTIVE SCREENING.

8

8

NO.	DATE	REVISION	BY

STATE OF WISCONSIN
DEPARTMENT OF TRANSPORTATION
STRUCTURES DESIGN SECTION

STRUCTURE B-13-866

DRAWN BY DTH | PLANS CK'D. BMO

PROTECTIVE SCREENING DETAILS

SHEET 11 292

FILE NAME : S:\MAD\1200--1299\1275\027\Micros\PLAN\080511_cd.dgn

DRAFT

PD LINE		AREA (SF)				INCREMENTAL VOL (CY)					CUMULATIVE VOL (CY)					
STATION	DISTANCE	CUT NOTE 1	FILL NOTE 2	EBS (5% OF CUT)	AVAILABLE STRUCTURE EXCAVATION NOTE 3	CUT NOTE 1	FILL NOTE 2	EBS (5% OF CUT)	AVAILABLE STRUCTURE EXCAVATION NOTE 3	EXPANDED FILL FACTOR = 1.25 NOTE 4	CUT NOTE 1	FILL NOTE 2	EBS (5% OF CUT)	AVAILABLE STRUCTURE EXCAVATION NOTE 3	EXPANDED FILL FACTOR = 1.25 NOTE 4	MASS ORDINATE NOTE 5
14+46		365.4	0.0	18.3	0.0						0.0	0.0	0.0	0.0		0
14+50	4	365.4	0.0	18.3	0.0	54.1	0.0	2.7	0.0	0.0	54.1	0.0	2.7	0.0	0.0	54
15+00	50	209.4	0.0	10.5	0.0	532.2	0.0	26.7	0.0	0.0	586.3	0.0	29.4	0.0	0.0	586
15+50	50	253.6	25.7	12.7	0.0	428.7	23.8	21.5	0.0	29.8	1,015.0	23.8	50.9	0.0	29.8	985
16+00	50	244.9	9.1	12.2	0.0	461.6	32.2	23.1	0.0	40.3	1,476.6	56.0	74.0	0.0	70.1	1,407
16+50	50	236.5	5.2	11.8	0.0	445.7	13.2	22.2	0.0	16.5	1,922.3	69.2	96.2	0.0	86.6	1,836
17+00	50	233.6	3.6	11.7	0.0	435.3	8.1	21.8	0.0	10.1	2,357.6	77.3	118.0	0.0	96.7	2,261
17+50	50	245.4	4.6	12.3	0.0	443.5	7.6	22.2	0.0	9.5	2,801.1	84.9	140.2	0.0	106.2	2,695
18+00	50	251.1	2.6	12.6	0.0	459.7	6.7	23.1	0.0	8.4	3,260.8	91.6	163.3	0.0	114.6	3,146
18+50	50	257.9	1.8	12.9	0.0	471.3	4.1	23.6	0.0	5.1	3,732.1	95.7	186.9	0.0	119.7	3,612
19+00	50	257.3	1.5	12.9	0.0	477.0	3.1	23.9	0.0	3.9	4,209.1	98.8	210.8	0.0	123.6	4,086
19+50	50	248.9	0.9	12.4	0.0	468.7	2.2	23.4	0.0	2.8	4,677.8	101.0	234.2	0.0	126.4	4,551
20+00	50	215.8	3.1	10.8	0.0	430.3	3.7	21.5	0.0	4.6	5,108.1	104.7	255.7	0.0	131.0	4,977
20+50	50	213.7	0.0	10.7	0.0	397.7	2.9	19.9	0.0	3.6	5,505.8	107.6	275.6	0.0	134.6	5,371
21+00	50	246.3	0.3	12.3	0.0	425.9	0.3	21.3	0.0	0.4	5,931.7	107.9	296.9	0.0	135.0	5,797
21+50	50	250.4	2.5	12.5	0.6	459.9	2.6	23.0	0.6	3.3	6,391.6	110.5	319.9	0.6	138.3	6,254
22+00	50	219.9	8.0	11.0	1.6	435.5	9.7	21.8	2.0	12.1	6,827.1	120.2	341.7	2.6	150.4	6,679
22+50	50	192.3	12.9	9.6	1.7	381.7	19.4	19.1	3.1	24.3	7,208.8	139.6	360.8	5.7	174.7	7,040
23+00	50	172.3	14.4	8.6	2.0	337.6	25.3	16.9	3.4	31.6	7,546.4	164.9	377.7	9.1	206.3	7,349
23+50	50	184.3	13.2	9.2	0.0	330.2	25.6	16.5	1.9	32.0	7,876.6	190.5	394.2	11.0	238.3	7,649
24+00	50	150.1	13.0	7.5	2.2	309.6	24.3	15.5	2.0	30.4	8,186.2	214.8	409.7	13.0	268.7	7,931
24+50	50	144.5	11.8	7.2	2.0	272.8	23.0	13.6	3.9	28.8	8,459.0	237.8	423.3	16.9	297.5	8,178
25+00	50	149.1	11.0	7.5	1.9	271.9	21.1	13.6	3.6	26.4	8,730.9	258.9	436.9	20.5	323.9	8,428
25+50	50	180.4	6.7	9.0	0.0	305.1	16.4	15.3	1.8	20.5	9,036.0	275.3	452.2	22.3	344.4	8,714
26+00	50	194.3	1.7	9.7	0.0	346.9	7.8	17.3	0.0	9.8	9,382.9	283.1	469.5	22.3	354.2	9,051
26+50	50	269.4	0.9	13.5	0.0	429.4	2.4	21.5	0.0	3.0	9,812.3	285.5	491.0	22.3	357.2	9,477
27+00	50	297.2	1.2	14.9	0.0	524.6	1.9	26.3	0.0	2.4	10,336.9	287.4	517.3	22.3	359.6	10,000
27+50	50	299.5	1.3	15.0	0.0	552.5	2.3	27.7	0.0	2.9	10,889.4	289.7	545.0	22.3	362.5	10,549
28+00	50	364.9	0.4	18.2	0.0	615.2	1.6	30.7	0.0	2.0	11,504.6	291.3	575.7	22.3	364.5	11,162
28+50	50	355.9	0.1	17.8	0.0	667.4	0.5	33.3	0.0	0.6	12,172.0	291.8	609.0	22.3	365.1	11,829
29+00	50	332.7	1.1	16.6	0.0	637.6	1.1	31.9	0.0	1.4	12,809.6	292.9	640.9	22.3	366.5	12,465
29+50	50	322.6	0.4	16.1	0.0	606.8	1.4	30.3	0.0	1.8	13,416.4	294.3	671.2	22.3	368.3	13,070
30+00	50	332.1	0.0	16.6	0.0	606.2	0.4	30.3	0.0	0.5	14,022.6	294.7	701.5	22.3	368.8	13,676
30+50	50	257.7	0.4	12.9	0.0	546.1	0.4	27.3	0.0	0.5	14,568.7	295.1	728.8	22.3	369.3	14,222
31+00	50	232.3	0.0	11.6	0.0	453.7	0.4	22.7	0.0	0.5	15,022.4	295.5	751.5	22.3	369.8	14,675
31+50	50	279.5	0.0	14.0	0.0	473.9	0.0	23.7	0.0	0.0	15,496.3	295.5	775.2	22.3	369.8	15,149
32+00	50	317.4	0.3	15.9	0.0	552.7	0.3	27.7	0.0	0.4	16,049.0	295.8	802.9	22.3	370.2	15,701
32+50	50	284.6	1.0	14.2	0.0	557.4	1.2	27.9	0.0	1.5	16,606.4	297.0	830.8	22.3	371.7	16,257
33+00	50	267.5	1.4	13.4	0.0	511.2	2.2	25.6	0.0	2.8	17,117.6	299.2	856.4	22.3	374.5	16,765
33+50	50	253.9	1.9	12.7	0.0	482.8	3.1	24.2	0.0	3.9	17,600.4	302.3	880.6	22.3	378.4	17,244
34+00	50	227.0	5.4	11.4	0.0	445.3	6.8	22.3	0.0	8.5	18,045.7	309.1	902.9	22.3	386.9	17,681
34+50	50	220.1	3.1	11.0	0.0	414.0	7.9	20.7	0.0	9.9	18,459.7	317.0	923.6	22.3	396.8	18,085
35+00	50	198.6	2.6	9.9	0.0	387.7	5.3	19.4	0.0	6.6	18,847.4	322.3	943.0	22.3	403.4	18,466
35+50	50	206.0	3.3	10.3	0.0	374.6	5.5	18.7	0.0	6.9	19,222.0	327.8	961.7	22.3	410.3	18,834
36+00	50	239.8	3.0	12.0	0.0	412.8	5.8	20.6	0.0	7.3	19,634.8	333.6	982.3	22.3	417.6	19,240

NOTES:

1) CUT: THE CUT QUANTITY IS DETERMINED BY THE METHOD OF AVERAGE END AREAS FROM PROPOSED SUBGRADE OR FINISHED GROUND TO EXISTING GROUND, WITH NO CORRECTION FOR CURVATURE OR EXPANSION FACTORS. PAVEMENT MATERIAL IS INCLUDED IN CUT.

2) FILL: THE FILL QUANTITY IS DETERMINED IN ITS FINAL LOCATION, USING THE METHOD OF AVERAGE END AREAS FROM EXISTING GROUND TO PROPOSED SUBGRADE OR FINISHED GROUND, WITH NO CORRECTION FOR CURVATURE, SETTLEMENT OR EXPANSION.

3) AVAILABLE STRUCTURE EXCAVATION IS FOR INFORMATION ONLY. SEE CONSTRUCTION DETAILS FOR ANTICIPATED LIMITS. LIMITS WILL VARY DEPENDING ON SHOP DRAWING DESIGN. AVAILABLE STRUCTURE EXCAVATION IS INCIDENTAL TO BID ITEM "WALL CONCRETE PANEL MECHANICALLY STABILIZED EARTH LRFD/QMP".

4) EXPANDED FILL = (UNEXPANDED FILL)* EXPANDED FILL FACTOR. EXPANDED FILL FACTOR = 1.25.

5) MASS ORDINATE: MASS ORDINATE = CUT + AVAILABLE STRUCTURE EXCAVATION - FILL. DOES NOT INCLUDE AN EXPANSION FACTOR, SEE NOTES 1 AND 2. THE MASS ORDINATE IS FOR INFORMATION PURPOSES ONLY.

DRAFT

CON'T PREVIOUS SHEET

PD LINE (CON'T)		AREA (SF)				INCREMENTAL VOL (CY)					CUMULATIVE VOL (CY)					
STATION	DISTANCE	CUT NOTE 1	FILL NOTE 2	EBS (5% OF CUT)	AVAILABLE STRUCTURE EXCAVATION NOTE 3	CUT NOTE 1	FILL NOTE 2	EBS (5% OF CUT)	AVAILABLE STRUCTURE EXCAVATION NOTE 3	EXPANDED FILL FACTOR = 1.25 NOTE 4	CUT NOTE 1	FILL NOTE 2	EBS (5% OF CUT)	AVAILABLE STRUCTURE EXCAVATION NOTE 3	EXPANDED FILL FACTOR = 1.25 NOTE 4	MASS ORDINATE NOTE 5
36+50	50	250.6	2.7	12.5	0.0	464.1	5.0	23.1	0.0	6.3	20,098.9	338.6	1,005.4	22.3	423.9	19,697
37+00	50	204.6	0.0	10.2	0.0	421.5	2.5	21.0	0.0	3.1	20,520.4	341.1	1,026.4	22.3	427.0	20,116
37+50	50	165.6	0.0	8.3	0.0	342.8	0.0	17.1	0.0	0.0	20,863.2	341.1	1,043.5	22.3	427.0	20,459
38+00	50	183.3	0.0	9.2	0.0	323.1	0.0	16.2	0.0	0.0	21,186.3	341.1	1,059.7	22.3	427.0	20,782
38+50	50	194.1	6.6	9.7	0.0	349.4	6.1	17.5	0.0	7.6	21,535.7	347.2	1,077.2	22.3	434.6	21,123
39+00	50	183.7	6.3	9.2	0.0	349.8	11.9	17.5	0.0	14.9	21,885.5	359.1	1,094.7	22.3	449.5	21,458
39+50	50	179.8	7.4	9.0	0.0	336.6	12.7	16.9	0.0	15.9	22,222.1	371.8	1,111.6	22.3	465.4	21,779
40+00	50	173.4	7.6	8.7	0.0	327.0	13.9	16.4	0.0	17.4	22,549.1	385.7	1,128.0	22.3	482.8	22,089
40+50	50	188.0	5.5	9.4	0.0	334.6	12.1	16.8	0.0	15.1	22,883.7	397.8	1,144.8	22.3	497.9	22,408
41+00	50	177.6	8.5	8.9	0.0	338.5	13.0	16.9	0.0	16.3	23,222.2	410.8	1,161.7	22.3	514.2	22,730
41+50	50	174.5	11.5	8.7	0.0	326.0	18.5	16.3	0.0	23.1	23,548.2	429.3	1,178.0	22.3	537.3	23,033
42+00	50	202.8	2.2	10.1	0.0	349.4	12.7	17.4	0.0	15.9	23,897.6	442.0	1,195.4	22.3	553.2	23,367
42+50	50	181.2	7.6	9.1	0.0	355.6	9.1	17.8	0.0	11.4	24,253.2	451.1	1,213.2	22.3	564.6	23,711
43+00	50	207.2	5.1	10.4	0.0	359.6	11.8	18.1	0.0	14.8	24,612.8	462.9	1,231.3	22.3	579.4	24,056
43+50	50	248.5	1.9	12.4	0.0	421.9	6.5	21.1	0.0	8.1	25,034.7	469.4	1,252.4	22.3	587.5	24,470
44+00	50	278.2	1.2	13.9	0.0	487.7	2.9	24.4	0.0	3.6	25,522.4	472.3	1,276.8	22.3	591.1	24,954
44+50	50	321.1	3.5	16.1	0.0	554.9	4.4	27.8	0.0	5.5	26,077.3	476.7	1,304.6	22.3	596.6	25,503
45+00	50	371.6	7.1	18.6	0.0	641.4	9.8	32.1	0.0	12.3	26,718.7	486.5	1,336.7	22.3	608.9	26,132
45+50	50	421.1	2.0	21.1	0.0	734.0	8.4	36.8	0.0	10.5	27,452.7	494.9	1,373.5	22.3	619.4	26,856
46+00	50	331.0	0.0	16.6	0.0	696.4	1.9	34.9	0.0	2.4	28,149.1	496.8	1,408.4	22.3	621.8	27,550
46+50	50	285.5	0.0	14.3	0.0	570.8	0.0	28.6	0.0	0.0	28,719.9	496.8	1,437.0	22.3	621.8	28,120
47+00	50	267.6	0.0	13.4	0.0	512.1	0.0	25.6	0.0	0.0	29,232.0	496.8	1,462.6	22.3	621.8	28,633
47+50	50	249.3	0.0	12.5	0.0	478.6	0.0	24.0	0.0	0.0	29,710.6	496.8	1,486.6	22.3	621.8	29,111
48+00	50	180.4	41.7	9.0	0.0	397.9	38.6	19.9	0.0	48.3	30,108.5	535.4	1,506.5	22.3	670.1	29,461
48+50	50	178.2	52.5	8.9	0.0	332.0	87.2	16.6	0.0	109.0	30,440.5	622.6	1,523.1	22.3	779.1	29,684
49+00	50	173.0	57.0	8.7	0.0	325.2	101.4	16.3	0.0	126.8	30,765.7	724.0	1,539.4	22.3	905.9	29,882
49+50	50	165.2	4.8	8.3	0.0	313.1	57.2	15.7	0.0	71.5	31,078.8	781.2	1,555.1	22.3	977.4	30,124
50+00	50	164.9	1.2	8.2	0.0	305.6	5.6	15.3	0.0	7.0	31,384.4	786.8	1,570.4	22.3	984.4	30,422
50+50	50	190.6	0.1	9.5	0.0	329.2	1.2	16.4	0.0	1.5	31,713.6	788.0	1,586.8	22.3	985.9	30,750
51+00	50	151.3	0.1	7.6	0.0	316.6	0.2	15.8	0.0	0.3	32,030.2	788.2	1,602.6	22.3	986.2	31,066
51+50	50	108.1	0.4	5.4	0.0	240.2	0.5	12.0	0.0	0.6	32,270.4	788.7	1,614.6	22.3	986.8	31,306
51+89	39	108.1	0.4	5.4	0.0	156.1	0.6	7.8	0.0	0.8	32,426.5	789.3	1,622.4	22.3	987.6	31,461
						32,426.5	789.3	1622.4	22.3	987.6						

NOTES:

1) CUT: THE CUT QUANTITY IS DETERMINED BY THE METHOD OF AVERAGE END AREAS FROM PROPOSED SUBGRADE OR FINISHED GROUND TO EXISTING GROUND, WITH NO CORRECTION FOR CURVATURE OR EXPANSION FACTORS. PAVEMENT MATERIAL IS INCLUDED IN CUT.

2) FILL: THE FILL QUANTITY IS DETERMINED IN ITS FINAL LOCATION, USING THE METHOD OF AVERAGE END AREAS FROM EXISTING GROUND TO PROPOSED SUBGRADE OR FINISHED GROUND, WITH NO CORRECTION FOR CURVATURE, SETTLEMENT OR EXPANSION.

3) AVAILABLE STRUCTURE EXCAVATION IS FOR INFORMATION ONLY. SEE CONSTRUCTION DETAILS FOR ANTICIPATED LIMITS. LIMITS WILL VARY DEPENDING ON SHOP DRAWING DESIGN. AVAILABLE STRUCTURE EXCAVATION IS INCIDENTAL TO BID ITEM "WALL CONCRETE PANEL MECHANICALLY STABILIZED EARTH LRFD/QMP".

4) EXPANDED FILL = (UNEXPANDED FILL)* EXPANDED FILL FACTOR. EXPANDED FILL FACTOR = 1.25.

5) MASS ORDINATE: MASS ORDINATE = CUT + AVAILABLE STRUCTURE EXCAVATION - FILL. DOES NOT INCLUDE AN EXPANSION FACTOR, SEE NOTES 1 AND 2. THE MASS ORDINATE IS FOR INFORMATION PURPOSES ONLY.

DRAFT

SH LINE		AREA (SF)				INCREMENTAL VOL (CY)					CUMULATIVE VOL (CY)					
STATION	DISTANCE	CUT NOTE 1	FILL NOTE 2	EBS (5% OF CUT)	AVAILABLE STRUCTURE EXCAVATION NOTE 3	CUT NOTE 1	FILL NOTE 2	EBS (5% OF CUT)	AVAILABLE STRUCTURE EXCAVATION NOTE 3	EXPANDED FILL FACTOR = 1.25 NOTE 4	CUT NOTE 1	FILL NOTE 2	EBS (5% OF CUT)	AVAILABLE STRUCTURE EXCAVATION NOTE 3	EXPANDED FILL FACTOR = 1.25 NOTE 4	MASS ORDINATE NOTE 5
4+14		115.9	1.3	5.8	0.0	0.0	0.0	0.0	0.0	0.0	0.0	0.0	0.0	0.0	0.0	0
4+50	36	117.1	5.5	5.9	0.0	155.3	4.5	7.8	0.0	5.6	155.3	4.5	7.8	0.0	5.6	150
5+00	50	144.7	9.1	7.2	0.0	242.4	13.5	12.1	0.0	16.9	397.7	18.0	19.9	0.0	22.5	375
5+50	50	196.6	0.9	9.8	0.0	316.0	9.3	15.7	0.0	11.6	713.7	27.3	35.6	0.0	34.1	680
6+00	50	257.4	0.0	12.9	0.0	420.4	0.8	21.0	0.0	1.0	1,134.1	28.1	56.6	0.0	35.1	1,099
6+40	40	257.4	0.0	12.9	0.0	381.3	0.0	19.1	0.0	0.0	1,515.4	28.1	75.7	0.0	35.1	1,480
																0
7+60		73.8	46.4	3.7	0.0	0.0	0.0	0.0	0.0	0.0	1,515.4	28.1	75.7	0.0	35.1	1,480
8+00	40	73.8	46.4	3.7	0.0	109.3	68.7	5.5	0.0	85.9	1,624.7	96.8	81.2	0.0	121.0	1,504
8+50	50	0.0	238.3	0.0	0.0	68.3	263.6	3.4	0.0	329.5	1,693.0	360.4	84.6	0.0	450.5	1,243
9+00	50	0.0	353.8	0.0	0.0	0.0	548.2	0.0	0.0	685.3	1,693.0	908.6	84.6	0.0	1,135.8	557
9+50	50	0.0	299.5	0.0	0.0	0.0	604.9	0.0	0.0	756.1	1,693.0	1,513.5	84.6	0.0	1,891.9	-199
10+00	50	0.0	203.7	0.0	0.0	0.0	465.9	0.0	0.0	582.4	1,693.0	1,979.4	84.6	0.0	2,474.3	-781
10+50	50	6.6	101.7	0.3	0.0	6.1	282.8	0.3	0.0	353.5	1,699.1	2,262.2	84.9	0.0	2,827.8	-1,129
11+00	50	1.5	116.3	0.1	0.0	7.5	201.9	0.4	0.0	252.4	1,706.6	2,464.1	85.3	0.0	3,080.2	-1,374
11+50	50	36.5	24.3	1.8	0.0	35.2	130.2	1.8	0.0	162.8	1,741.8	2,594.3	87.1	0.0	3,243.0	-1,501
12+00	50	55.8	6.1	2.8	0.0	85.5	28.1	4.3	0.0	35.1	1,827.3	2,622.4	91.4	0.0	3,278.1	-1,451
12+50	50	64.3	9.1	3.2	0.0	111.2	14.1	5.6	0.0	17.6	1,938.5	2,636.5	97.0	0.0	3,295.7	-1,357
13+00	50	63.6	5.0	3.2	0.0	118.4	13.1	5.9	0.0	16.4	2,056.9	2,649.6	102.9	0.0	3,312.1	-1,255
13+50	50	93.5	1.6	4.7	0.0	145.5	6.1	7.3	0.0	7.6	2,202.4	2,655.7	110.2	0.0	3,319.7	-1,117
14+00	50	55.7	1.4	2.8	0.0	138.1	2.8	6.9	0.0	3.5	2,340.5	2,658.5	117.1	0.0	3,323.2	-983
14+30	30	62.1	0.3	3.1	0.0	65.4	0.9	3.3	0.0	1.1	2,405.9	2,659.4	120.4	0.0	3,324.3	-918
						2,405.9	2,659.4	120.4	0.0	3,324.3						

NOTES:

1) CUT: THE CUT QUANTITY IS DETERMINED BY THE METHOD OF AVERAGE END AREAS FROM PROPOSED SUBGRADE OR FINISHED GROUND TO EXISTING GROUND, WITH NO CORRECTION FOR CURVATURE OR EXPANSION FACTORS. PAVEMENT MATERIAL IS INCLUDED IN CUT.

2) FILL: THE FILL QUANTITY IS DETERMINED IN ITS FINAL LOCATION, USING THE METHOD OF AVERAGE END AREAS FROM EXISTING GROUND TO PROPOSED SUBGRADE OR FINISHED GROUND, WITH NO CORRECTION FOR CURVATURE, SETTLEMENT OR EXPANSION.

3) AVAILABLE STRUCTURE EXCAVATION IS FOR INFORMATION ONLY. SEE CONSTRUCTION DETAILS FOR ANTICIPATED LIMITS. LIMITS WILL VARY DEPENDING ON SHOP DRAWING DESIGN. AVAILABLE STRUCTURE EXCAVATION IS INCIDENTAL TO BID ITEM "WALL CONCRETE PANEL MECHANICALLY STABILIZED EARTH LRFD/QMP".

4) EXPANDED FILL = (UNEXPANDED FILL)* EXPANDED FILL FACTOR. EXPANDED FILL FACTOR = 1.25.

5) MASS ORDINATE: MASS ORDINATE = CUT + AVAILABLE STRUCTURE EXCAVATION - FILL. DOES NOT INCLUDE AN EXPANSION FACTOR, SEE NOTES 1 AND 2. THE MASS ORDINATE IS FOR INFORMATION PURPOSES ONLY.

DRAFT

BT LINE		AREA (SF)				INCREMENTAL VOL (CY)					CUMULATIVE VOL (CY)					
STATION	DISTANCE	CUT NOTE 1	FILL NOTE 2	EBS (5% OF CUT)	AVAILABLE STRUCTURE EXCAVATION NOTE 3	CUT NOTE 1	FILL NOTE 2	EBS (5% OF CUT)	AVAILABLE STRUCTURE EXCAVATION NOTE 3	EXPANDED FILL FACTOR = 1.25 NOTE 4	CUT NOTE 1	FILL NOTE 2	EBS (5% OF CUT)	AVAILABLE STRUCTURE EXCAVATION NOTE 3	EXPANDED FILL FACTOR = 1.25 NOTE 4	MASS ORDINATE NOTE 5
2+50		0.0	0.0	0.0	0.0	0.0	0.0	0.0	0.0	0.0	0.0	0.0	0.0	0.0	0.0	0
3+00	50	166.7	1.4	8.3	0.0	154.4	1.3	7.7	0.0	1.6	154.4	1.3	7.7	0.0	1.6	153
3+50	50	9.9	1.2	0.5	0.0	163.5	2.4	8.1	0.0	3.0	317.9	3.7	15.8	0.0	4.6	313
4+00	50	465.0	0.7	23.3	0.0	439.7	1.8	22.0	0.0	2.3	757.6	5.5	37.8	0.0	6.9	751
4+50	50	315.8	0.0	15.8	0.0	723.0	0.6	36.2	0.0	0.8	1,480.6	6.1	74.0	0.0	7.7	1,473
5+00	50	173.7	0.0	8.7	0.0	453.2	0.0	22.7	0.0	0.0	1,933.8	6.1	96.7	0.0	7.7	1,926
5+50	50	200.3	0.0	10.0	0.0	346.3	0.0	17.3	0.0	0.0	2,280.1	6.1	114.0	0.0	7.7	2,272
6+00	50	67.1	2.2	3.4	0.0	247.6	2.0	12.4	0.0	2.5	2,527.7	8.1	126.4	0.0	10.2	2,518
6+50	50	4.3	19.3	0.2	0.0	66.1	19.9	3.3	0.0	24.9	2,593.8	28.0	129.7	0.0	35.1	2,559
7+00	50	0.0	343.9	0.0	0.0	4.0	336.3	0.2	0.0	420.4	2,597.8	364.3	129.9	0.0	455.5	2,142
7+32	32	0.0	343.9	0.0	0.0	0.0	407.6	0.0	0.0	509.5	2,597.8	771.9	129.9	0.0	965.0	1,633
8+57		0.0	804.7	0.0	0.0	0.0	0.0	0.0	0.0	0.0	2,597.8	771.9	129.9	0.0	965.0	1,633
9+00	43	0.0	694.5	0.0	0.0	0.0	1193.8	0.0	0.0	1492.3	2,597.8	1,965.7	129.9	0.0	2457.3	141
9+50	50	0.0	380.0	0.0	0.0	0.0	994.9	0.0	0.0	1243.6	2,597.8	2,960.6	129.9	0.0	3700.9	-1,103
10+00	50	0.0	160.9	0.0	0.0	0.0	500.8	0.0	0.0	626.0	2,597.8	3,461.4	129.9	0.0	4326.9	-1,729
10+50	50	0.0	103.3	0.0	0.0	0.0	244.6	0.0	0.0	305.8	2,597.8	3,706.0	129.9	0.0	4632.7	-2,035
11+00	50	0.0	87.3	0.0	0.0	0.0	176.5	0.0	0.0	220.6	2,597.8	3,882.5	129.9	0.0	4853.3	-2,256
11+50	50	0.0	76.0	0.0	0.0	0.0	151.2	0.0	0.0	189.0	2,597.8	4,033.7	129.9	0.0	5042.3	-2,445
12+00	50	0.0	51.9	0.0	0.0	0.0	118.4	0.0	0.0	148.0	2,597.8	4,152.1	129.9	0.0	5190.3	-2,593
12+50	50	0.0	51.0	0.0	0.0	0.0	95.3	0.0	0.0	119.1	2,597.8	4,247.4	129.9	0.0	5309.4	-2,712
13+00	50	0.0	26.3	0.0	0.0	0.0	71.6	0.0	0.0	89.5	2,597.8	4,319.0	129.9	0.0	5398.9	-2,801
13+50	50	0.0	8.1	0.0	0.0	0.0	31.9	0.0	0.0	39.9	2,597.8	4,350.9	129.9	0.0	5438.8	-2,841
14+00	50	4.8	8.1	0.2	0.0	4.4	15.0	0.2	0.0	18.8	2,602.2	4,365.9	130.1	0.0	5457.6	-2,855
14+50	50	12.8	8.1	0.6	0.0	16.3	15.0	0.7	0.0	18.8	2,618.5	4,380.9	130.8	0.0	5476.4	-2,858
14+59	9	12.8	8.1	0.6	0.0	4.3	2.7	0.2	0.0	3.4	2,622.8	4,383.6	131.0	0.0	5479.8	-2,857
						2,622.8	4,383.6	131.0	0.0	5,479.8						

NOTES:

1) CUT: THE CUT QUANTITY IS DETERMINED BY THE METHOD OF AVERAGE END AREAS FROM PROPOSED SUBGRADE OR FINISHED GROUND TO EXISTING GROUND, WITH NO CORRECTION FOR CURVATURE OR EXPANSION FACTORS. PAVEMENT MATERIAL IS INCLUDED IN CUT.

2) FILL: THE FILL QUANTITY IS DETERMINED IN ITS FINAL LOCATION, USING THE METHOD OF AVERAGE END AREAS FROM EXISTING GROUND TO PROPOSED SUBGRADE OR FINISHED GROUND, WITH NO CORRECTION FOR CURVATURE, SETTLEMENT OR EXPANSION.

3) AVAILABLE STRUCTURE EXCAVATION IS FOR INFORMATION ONLY. SEE CONSTRUCTION DETAILS FOR ANTICIPATED LIMITS. LIMITS WILL VARY DEPENDING ON SHOP DRAWING DESIGN. AVAILABLE STRUCTURE EXCAVATION IS INCIDENTAL TO BID ITEM "WALL CONCRETE PANEL MECHANICALLY STABILIZED EARTH LRFD/QMP".

4) EXPANDED FILL = (UNEXPANDED FILL)* EXPANDED FILL FACTOR. EXPANDED FILL FACTOR = 1.25.

5) MASS ORDINATE: MASS ORDINATE = CUT + AVAILABLE STRUCTURE EXCAVATION - FILL. DOES NOT INCLUDE AN EXPANSION FACTOR, SEE NOTES 1 AND 2. THE MASS ORDINATE IS FOR INFORMATION PURPOSES ONLY.

DRAFT

NP LINE		AREA (SF)				INCREMENTAL VOL (CY)					CUMULATIVE VOL (CY)					
STATION	DISTANCE	CUT NOTE 1	FILL NOTE 2	EBS (5% OF CUT)	AVAILABLE STRUCTURE EXCAVATION NOTE 3	CUT NOTE 1	FILL NOTE 2	EBS (5% OF CUT)	AVAILABLE STRUCTURE EXCAVATION NOTE 3	EXPANDED FILL FACTOR = 1.25 NOTE 4	CUT NOTE 1	FILL NOTE 2	EBS (5% OF CUT)	AVAILABLE STRUCTURE EXCAVATION NOTE 3	EXPANDED FILL FACTOR = 1.25 NOTE 4	MASS ORDINATE NOTE 5
108+85		3.6	554.1	0.2	0.0	0.0	0.0	0.0	0.0	0.0	0.0	0.0	0.0	0.0	0.0	0
109+00	15	3.6	554.1	0.2	0.0	2.0	307.8	0.1	0.0	384.8	2.0	307.8	0.1	0.0	384.8	-383
109+50	50	52.1	549.3	2.6	0.0	51.6	1021.7	2.6	0.0	1277.1	53.6	1,329.5	2.7	0.0	1,661.9	-1,608
110+00	50	50.1	499.9	2.5	0.0	94.6	971.5	4.7	0.0	1214.4	148.2	2,301.0	7.4	0.0	2,876.3	-2,728
110+50	50	30.2	353.3	1.5	0.0	74.4	790.0	3.7	0.0	987.5	222.6	3,091.0	11.1	0.0	3,863.8	-3,641
111+00	50	20.9	272.5	1.0	0.0	47.3	579.4	2.3	0.0	724.3	269.9	3,670.4	13.4	0.0	4,588.1	-4,318
111+50	50	12.3	229.4	0.6	0.0	30.7	464.7	1.5	0.0	580.9	300.6	4,135.1	14.9	0.0	5,169.0	-4,868
112+00	50	13.5	169.8	0.7	0.0	23.9	369.6	1.2	0.0	462.0	324.5	4,504.7	16.1	0.0	5,631.0	-5,307
112+50	50	15.7	117.8	0.8	0.0	27.0	266.3	1.4	0.0	332.9	351.5	4,771.0	17.5	0.0	5,963.9	-5,612
113+00	50	19.6	75.2	1.0	0.0	32.7	178.7	1.7	0.0	223.4	384.2	4,949.7	19.2	0.0	6,187.3	-5,803
113+50	50	18.7	42.8	0.9	0.0	35.5	109.3	1.8	0.0	136.6	419.7	5,059.0	21.0	0.0	6,323.9	-5,904
114+00	50	0.0	44.9	0.0	0.0	17.3	81.2	0.8	0.0	101.5	437.0	5,140.2	21.8	0.0	6,425.4	-5,988
114+24	24	0.0	44.9	0.0	0.0	0.0	39.9	0.0	0.0	49.9	437.0	5,180.1	21.8	0.0	6,475.3	-6,038
						437.0	5,180.1	21.8	0.0	6,475.3						

NOTES:

1) CUT: THE CUT QUANTITY IS DETERMINED BY THE METHOD OF AVERAGE END AREAS FROM PROPOSED SUBGRADE OR FINISHED GROUND TO EXISTING GROUND, WITH NO CORRECTION FOR CURVATURE OR EXPANSION FACTORS. PAVEMENT MATERIAL IS INCLUDED IN CUT.

2) FILL: THE FILL QUANTITY IS DETERMINED IN ITS FINAL LOCATION, USING THE METHOD OF AVERAGE END AREAS FROM EXISTING GROUND TO PROPOSED SUBGRADE OR FINISHED GROUND, WITH NO CORRECTION FOR CURVATURE, SETTLEMENT OR EXPANSION.

3) AVAILABLE STRUCTURE EXCAVATION IS FOR INFORMATION ONLY. SEE CONSTRUCTION DETAILS FOR ANTICIPATED LIMITS. LIMITS WILL VARY DEPENDING ON SHOP DRAWING DESIGN. AVAILABLE STRUCTURE EXCAVATION IS INCIDENTAL TO BID ITEM "WALL CONCRETE PANEL MECHANICALLY STABILIZED EARTH LRFD/QMP".

4) EXPANDED FILL = (UNEXPANDED FILL)* EXPANDED FILL FACTOR. EXPANDED FILL FACTOR = 1.25.

5) MASS ORDINATE: MASS ORDINATE = CUT + AVAILABLE STRUCTURE EXCAVATION - FILL. DOES NOT INCLUDE AN EXPANSION FACTOR, SEE NOTES 1 AND 2. THE MASS ORDINATE IS FOR INFORMATION PURPOSES ONLY.

SP LINE		AREA (SF)				INCREMENTAL VOL (CY)					CUMULATIVE VOL (CY)					
STATION	DISTANCE	CUT NOTE 1	FILL NOTE 2	EBS (5% OF CUT)	AVAILABLE STRUCTURE EXCAVATION NOTE 3	CUT NOTE 1	FILL NOTE 2	EBS (5% OF CUT)	AVAILABLE STRUCTURE EXCAVATION NOTE 3	EXPANDED FILL FACTOR = 1.25 NOTE 4	CUT NOTE 1	FILL NOTE 2	EBS (5% OF CUT)	AVAILABLE STRUCTURE EXCAVATION NOTE 3	EXPANDED FILL FACTOR = 1.25 NOTE 4	MASS ORDINATE NOTE 5
13+65		34.6	27.5	1.7	0.0	0.0	0.0	0.0	0.0	0.0	0.0	0.0	0.0	0.0	0.0	0
14+00	35	34.6	27.5	1.7	0.0	44.9	35.6	2.2	0.0	44.5	44.9	35.6	2.2	0.0	44.5	9
14+50	50	49.7	75.3	2.5	0.0	78.1	95.2	3.9	0.0	119.0	123.0	130.8	6.1	0.0	163.5	-8
15+00	50	15.6	159.0	0.8	0.0	60.5	216.9	3.1	0.0	271.1	183.5	347.7	9.2	0.0	434.6	-164
15+50	50	11.9	208.6	0.6	0.0	25.5	340.4	1.3	0.0	425.5	209.0	688.1	10.5	0.0	860.1	-479
16+00	50	14.5	254.3	0.7	0.0	24.4	428.6	1.2	0.0	535.8	233.4	1,116.7	11.7	0.0	1395.9	-883
16+50	50	1.4	265.1	0.1	0.0	14.7	480.9	0.7	0.0	601.1	248.1	1,597.6	12.4	0.0	1997.0	-1,350
17+00	50	0.3	348.1	0.0	0.0	1.6	567.8	0.1	0.0	709.8	249.7	2,165.4	12.5	0.0	2706.8	-1,916
17+40	40	0.3	348.1	0.0	0.0	0.4	515.7	0.0	0.0	644.6	250.1	2,681.1	12.5	0.0	3351.4	-2,431
						250.1	2,681.1	12.5	0.0	3351.4						

NOTES:

1) CUT: THE CUT QUANTITY IS DETERMINED BY THE METHOD OF AVERAGE END AREAS FROM PROPOSED SUBGRADE OR FINISHED GROUND TO EXISTING GROUND, WITH NO CORRECTION FOR CURVATURE OR EXPANSION FACTORS. PAVEMENT MATERIAL IS INCLUDED IN CUT.

2) FILL: THE FILL QUANTITY IS DETERMINED IN ITS FINAL LOCATION, USING THE METHOD OF AVERAGE END AREAS FROM EXISTING GROUND TO PROPOSED SUBGRADE OR FINISHED GROUND, WITH NO CORRECTION FOR CURVATURE, SETTLEMENT OR EXPANSION.

3) AVAILABLE STRUCTURE EXCAVATION IS FOR INFORMATION ONLY. SEE CONSTRUCTION DETAILS FOR ANTICIPATED LIMITS. LIMITS WILL VARY DEPENDING ON SHOP DRAWING DESIGN. AVAILABLE STRUCTURE EXCAVATION IS INCIDENTAL TO BID ITEM "WALL CONCRETE PANEL MECHANICALLY STABILIZED EARTH LRFD/QMP".

4) EXPANDED FILL = (UNEXPANDED FILL)* EXPANDED FILL FACTOR. EXPANDED FILL FACTOR = 1.25.

5) MASS ORDINATE: MASS ORDINATE = CUT + AVAILABLE STRUCTURE EXCAVATION - FILL. DOES NOT INCLUDE AN EXPANSION FACTOR, SEE NOTES 1 AND 2. THE MASS ORDINATE IS FOR INFORMATION PURPOSES ONLY.

DRAFT

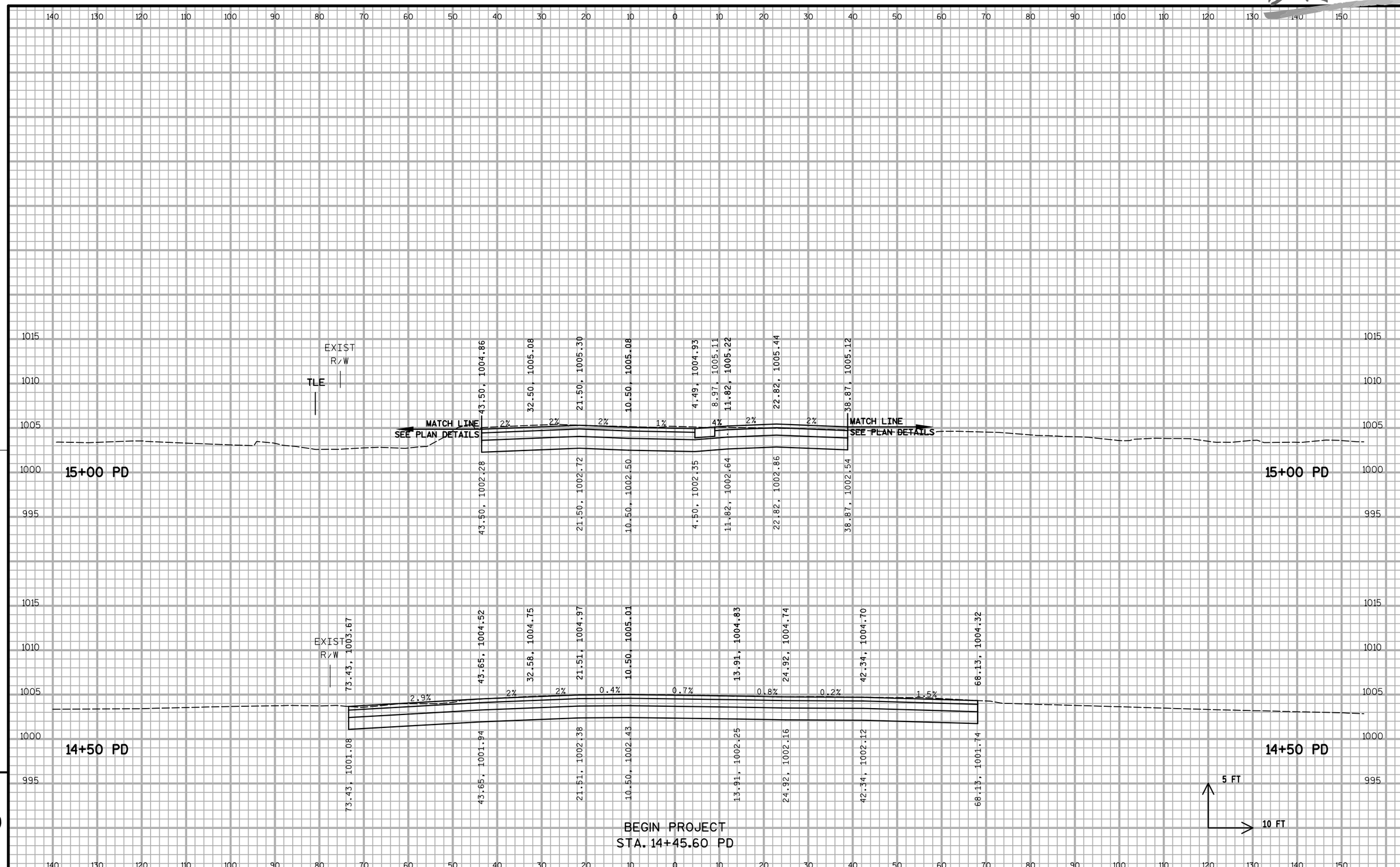

9

9

PROJECT NO:5849-02-02	HWY:CTH PD	COUNTY:DANE	CROSS SECTIONS - MCKEE ROAD (PD)	SHEET 298	E

DRAFT

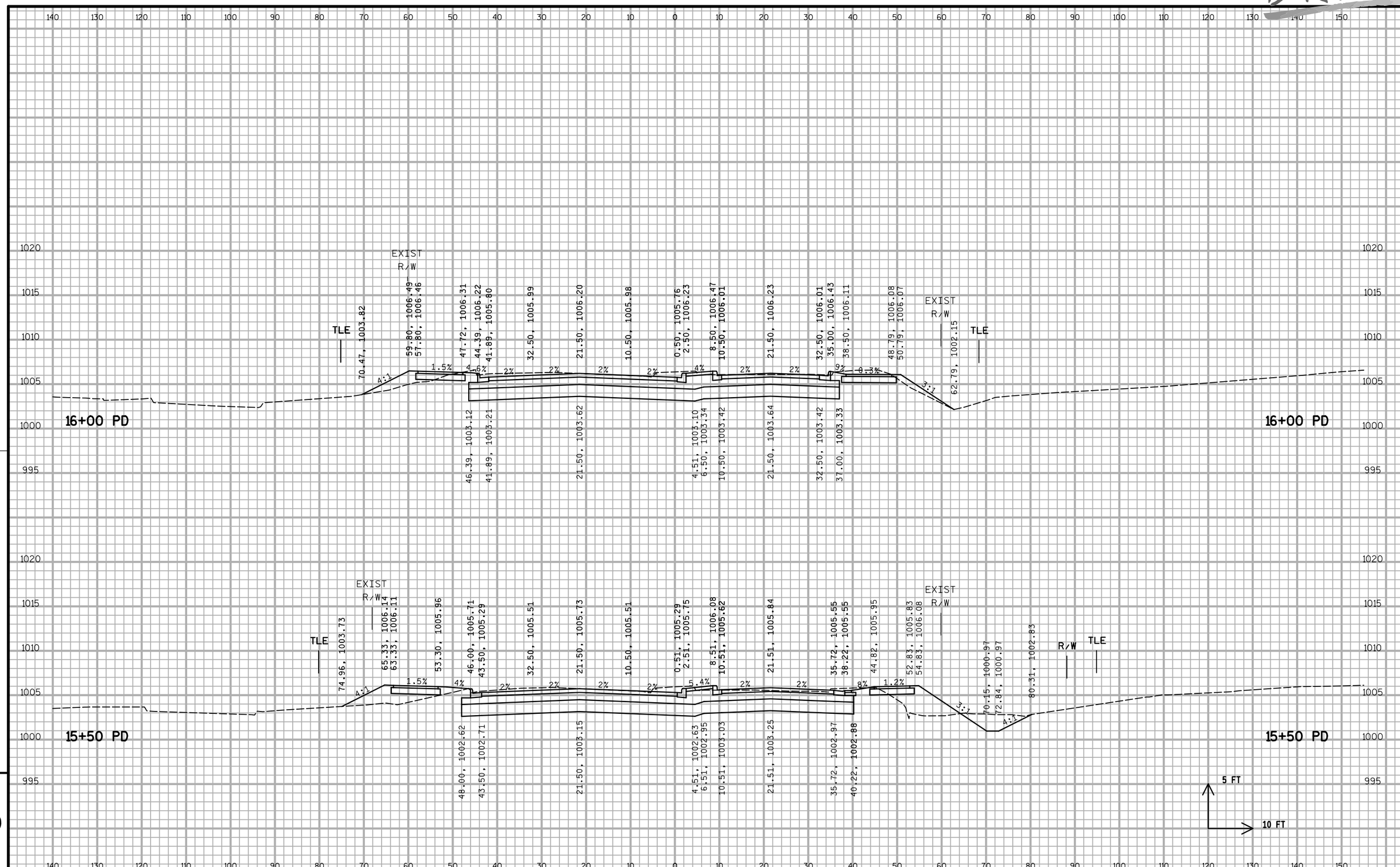

9

PROJECT NO:5849-02-02	HWY:CTH PD	COUNTY:DANE	CROSS SECTIONS - MCKEE ROAD (PD)	SHEET 299	E

FILE NAME : S:\MAD\1200--1299\1275\027\Micros\PLAN\090200_xs_pd.dgn PLOT DATE : 5/23/2019 PLOT BY : _username_ PLOT NAME : PLOT SCALE : $$.....plotscale.....$$ WISDOT/CADDS SHEET 21

DRAFT

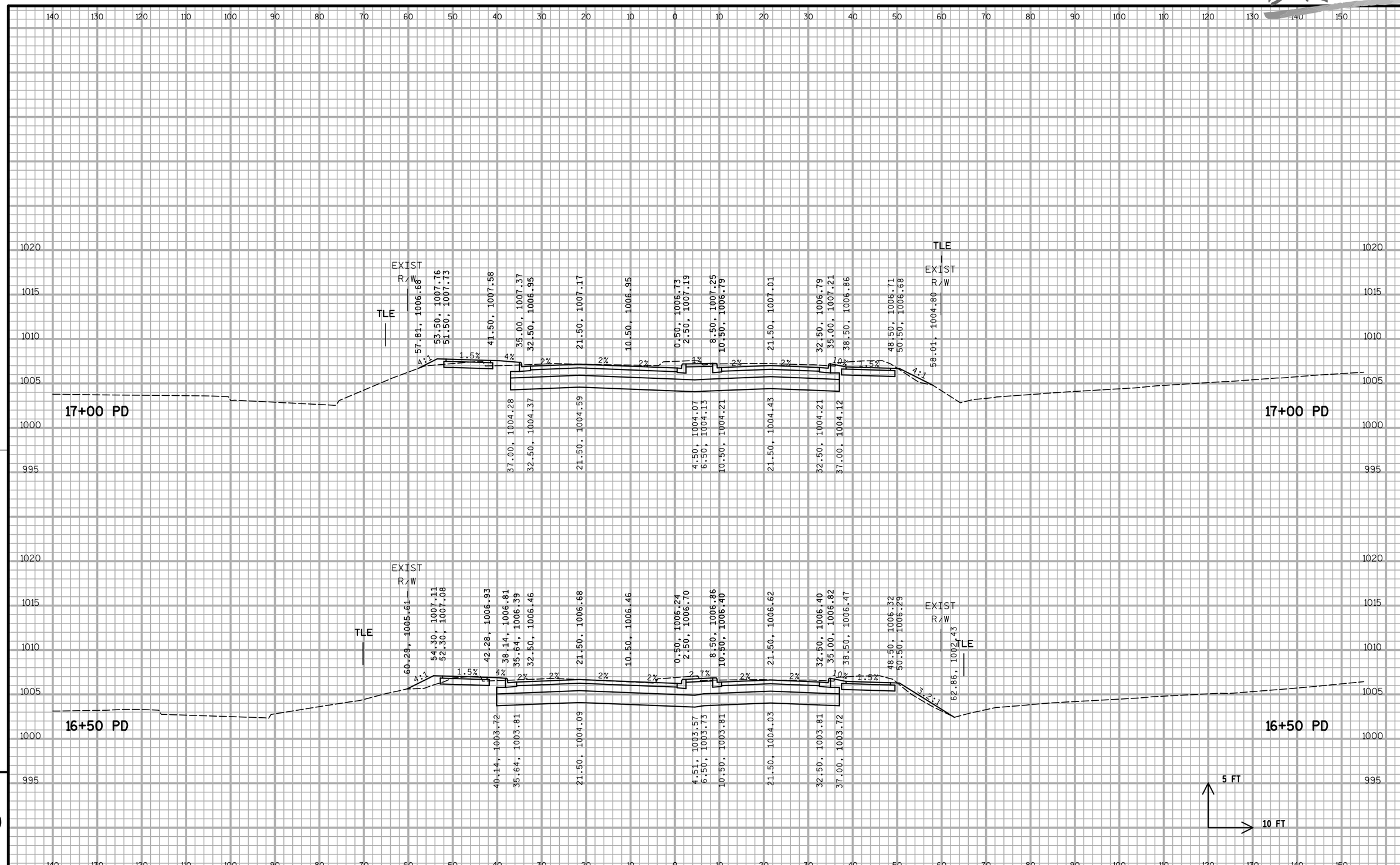

9

9

PROJECT NO:5849-02-02	HWY:CTH PD	COUNTY:DANE	CROSS SECTIONS - MCKEE ROAD (PD)	SHEET 300	E

DRAFT

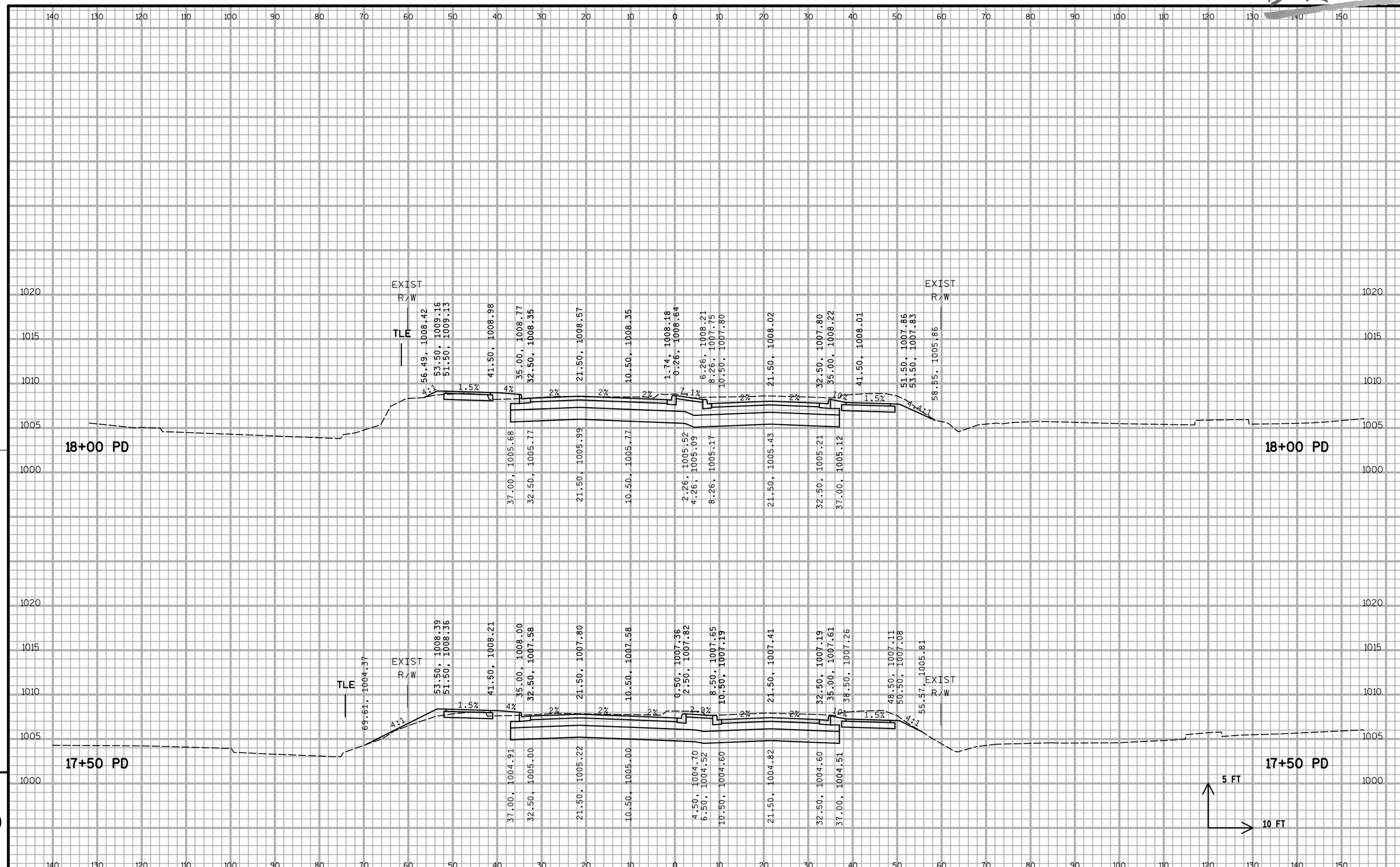

9

PROJECT NO:5849-02-02	HWY:CTH PD	COUNTY:DANE	CROSS SECTIONS - MCKEE ROAD (PD)	SHEET 301	E

FILE NAME : S:\MAD\1200--1299\1275\027\Micros\PLAN\090200_xs_pd.dgn PLOT DATE : 5/23/2019 PLOT BY : _username_ PLOT NAME : PLOT SCALE : $$.....plotscale.....$$ WISDOT/CADDS SHEET 21

DRAFT

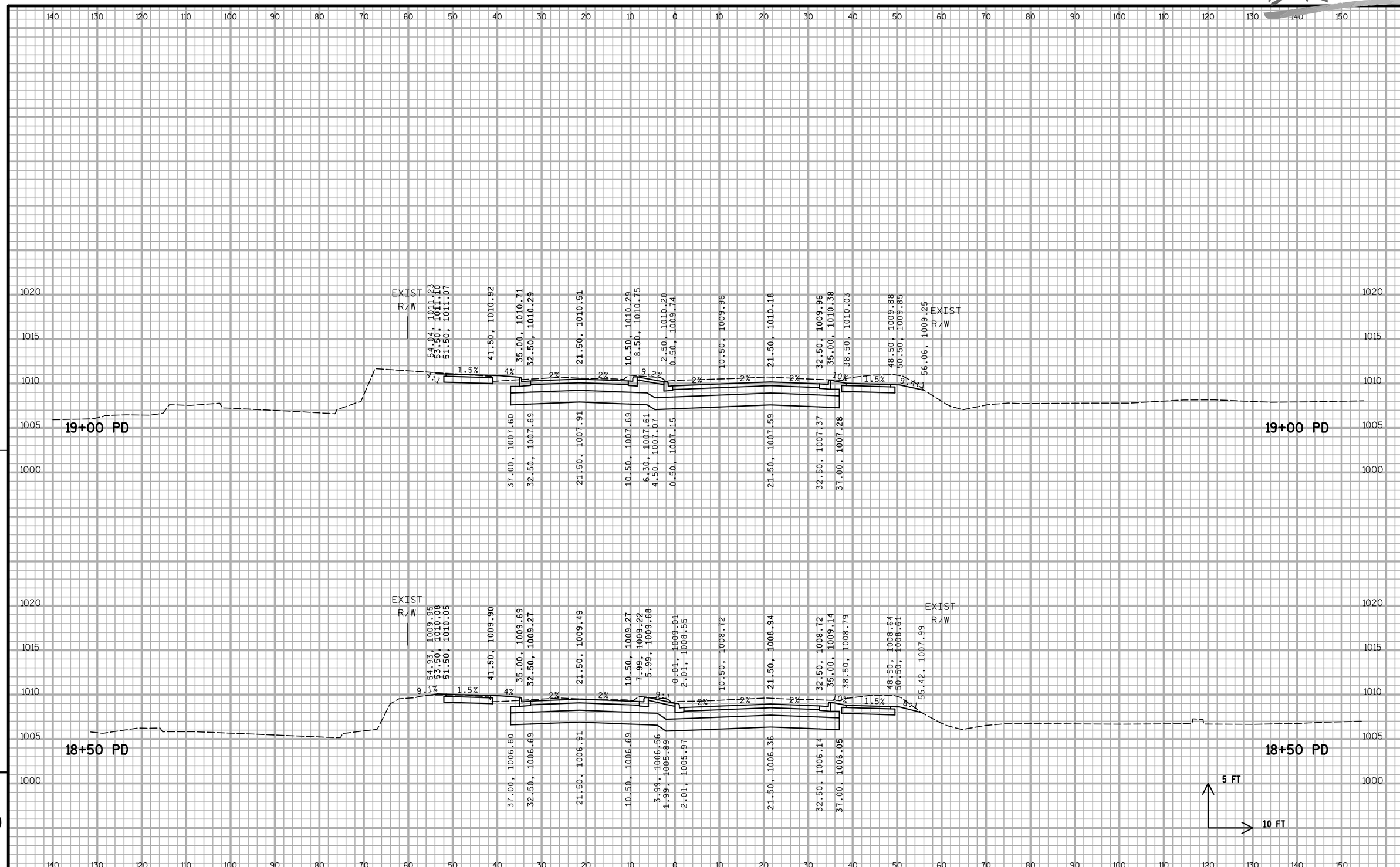

PROJECT NO:5849-02-02	HWY:CTH PD	COUNTY:DANE	CROSS SECTIONS - MCKEE ROAD (PD)	SHEET 302	E

DRAFT

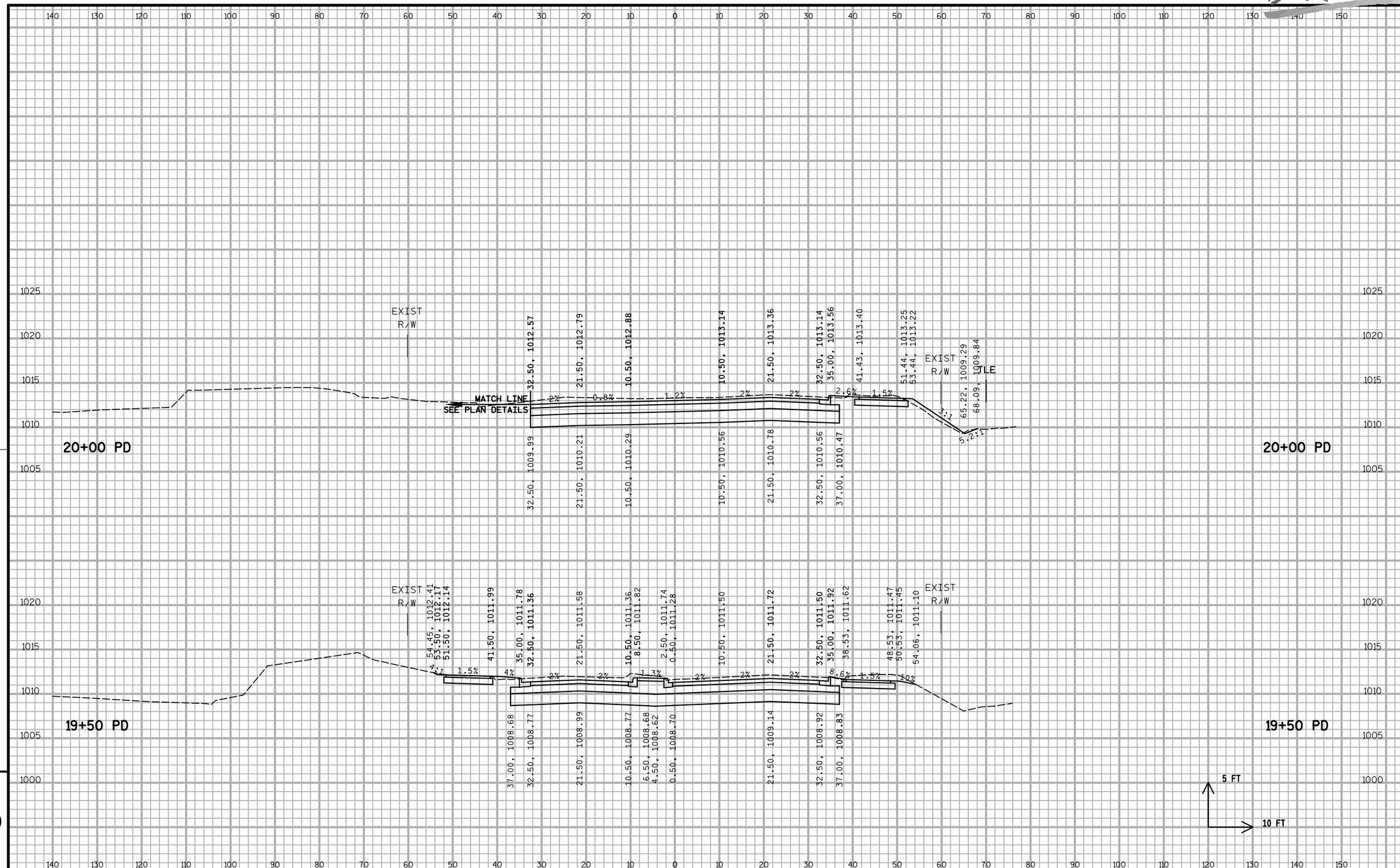

9

9

PROJECT NO:5849-02-02	HWY:CTH PD	COUNTY:DANE	CROSS SECTIONS - MCKEE ROAD (PD)	SHEET 303	E

DRAFT

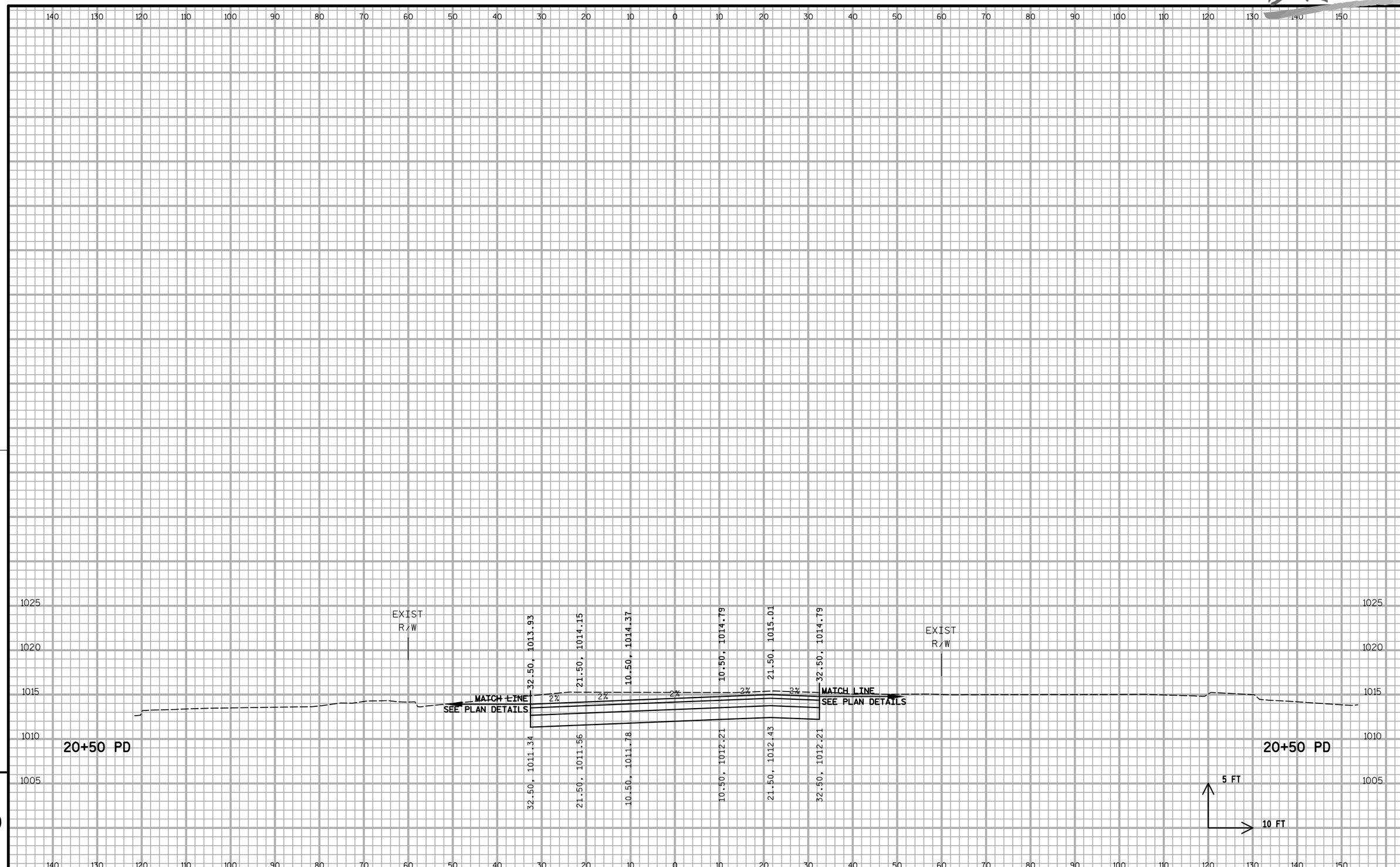

9 9

PROJECT NO:5849-02-02	HWY:CTH PD	COUNTY:DANE	CROSS SECTIONS - MCKEE ROAD (PD)	SHEET 304	E

DRAFT

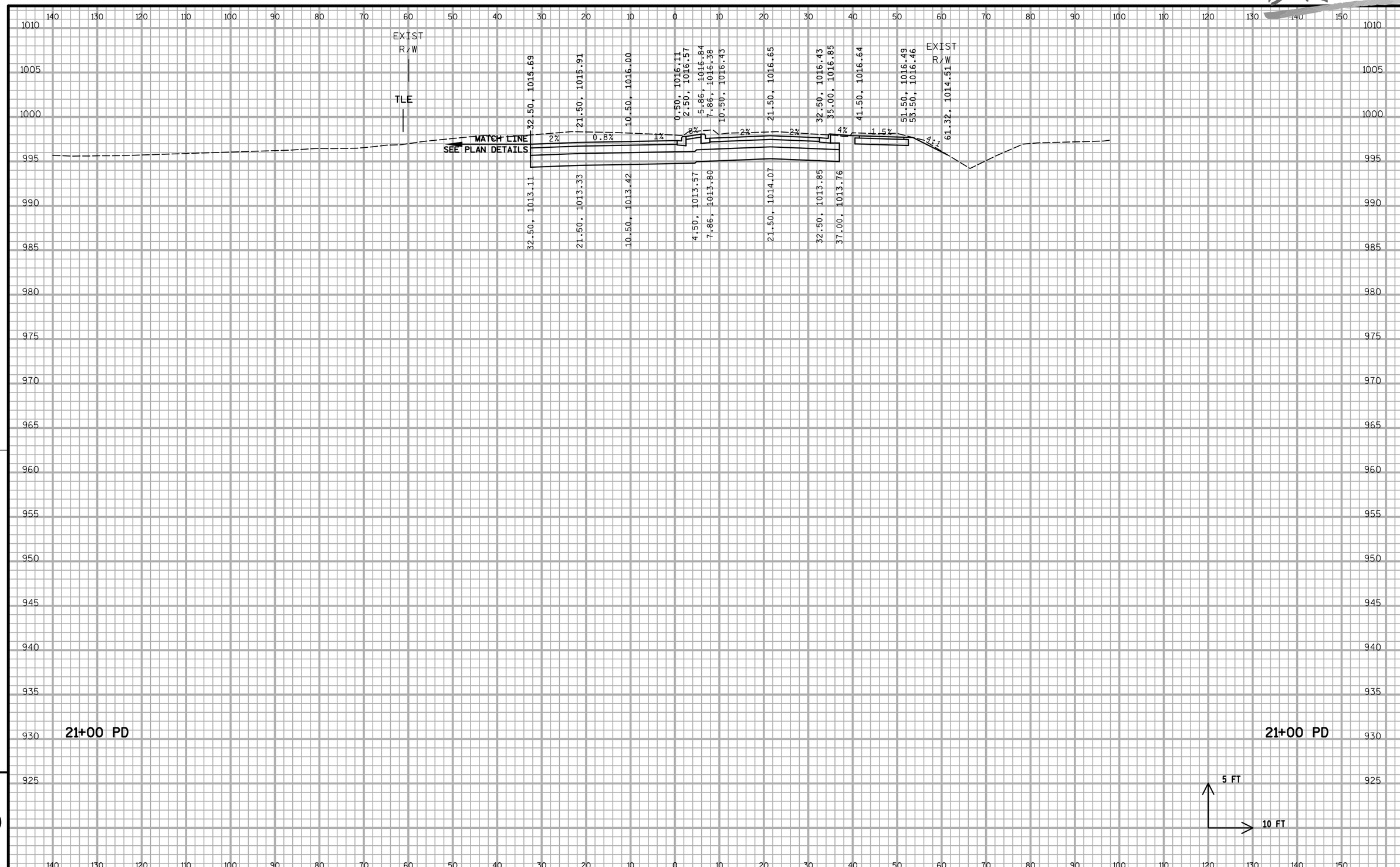

9

9

PROJECT NO:5849-02-02	HWY:CTH PD	COUNTY:DANE	CROSS SECTIONS - MCKEE ROAD (PD)	SHEET 305	E

DRAFT

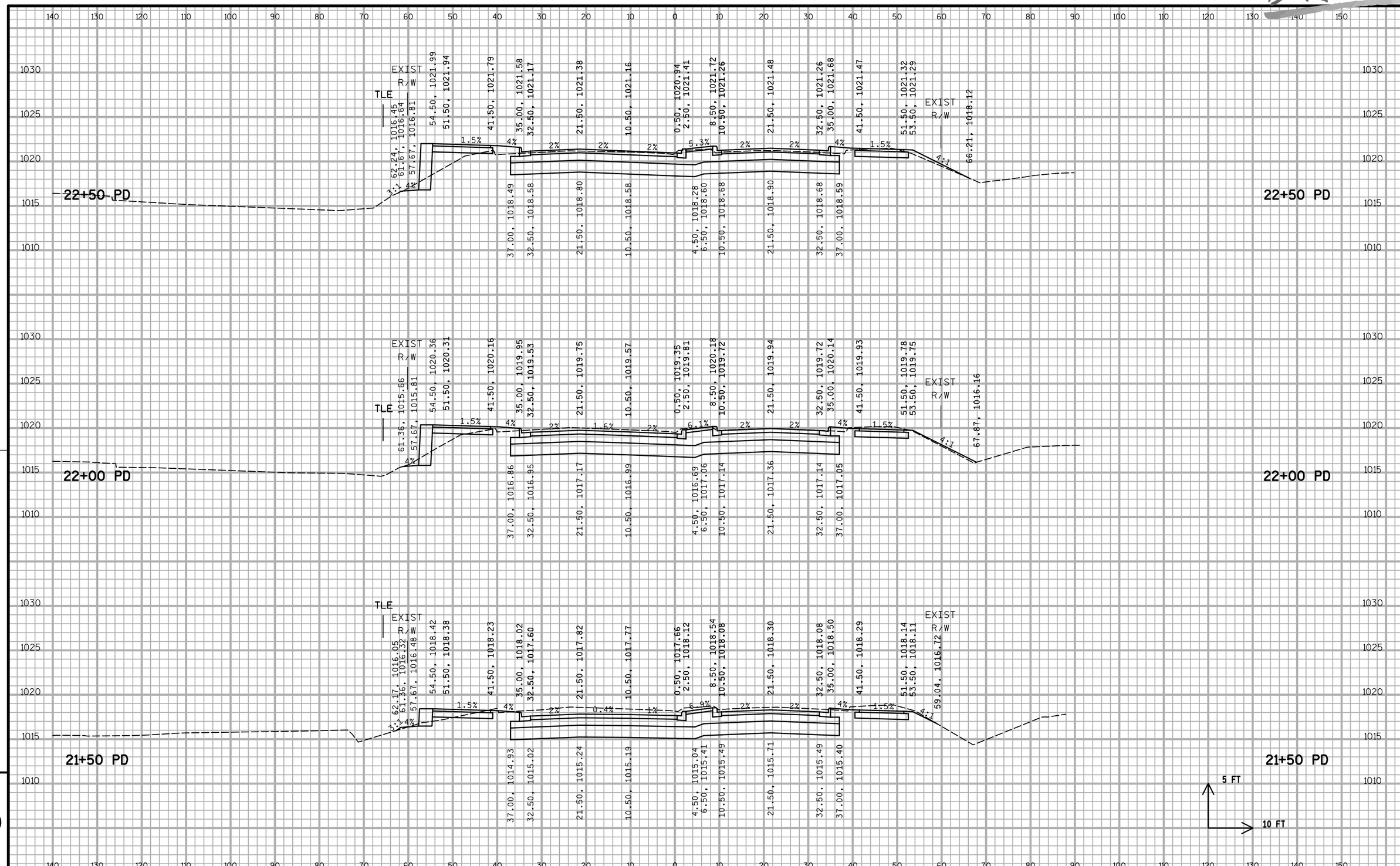

PROJECT NO:5849-02-02	HWY:CTH PD	COUNTY:DANE	CROSS SECTIONS - MCKEE ROAD (PD)	SHEET 306	E

FILE NAME : S:\MAD\1200--1299\1275\027\Micros\PLAN\090200_xs_pd.dgn PLOT DATE : 5/23/2019 PLOT BY : _username_ PLOT NAME : PLOT SCALE : $$.....plotscale.....$$ WISDOT/CADDS SHEET 21

DRAFT

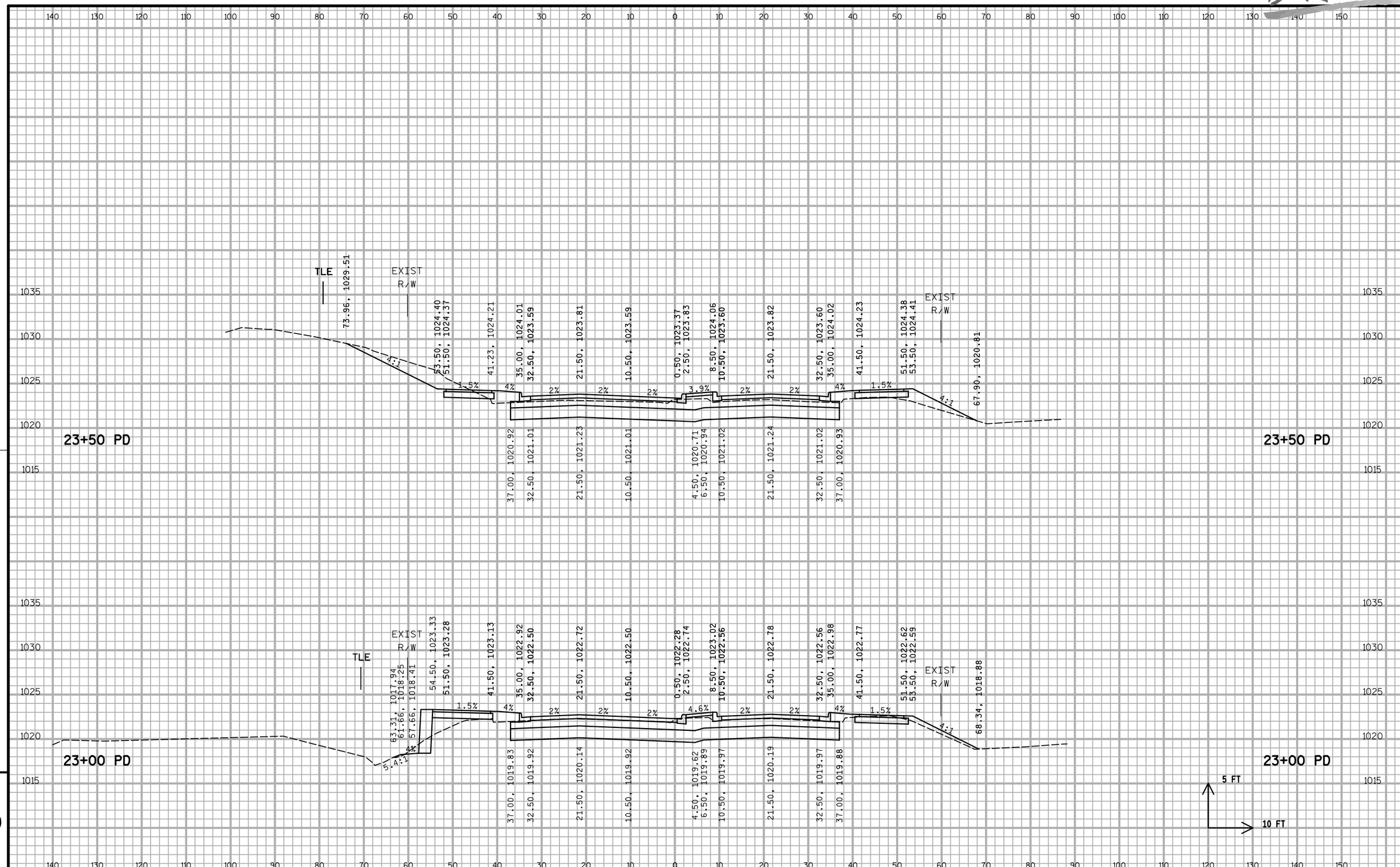

9

9

PROJECT NO:5849-02-02	HWY:CTH PD	COUNTY:DANE	CROSS SECTIONS - MCKEE ROAD (PD)	SHEET 307	E

DRAFT

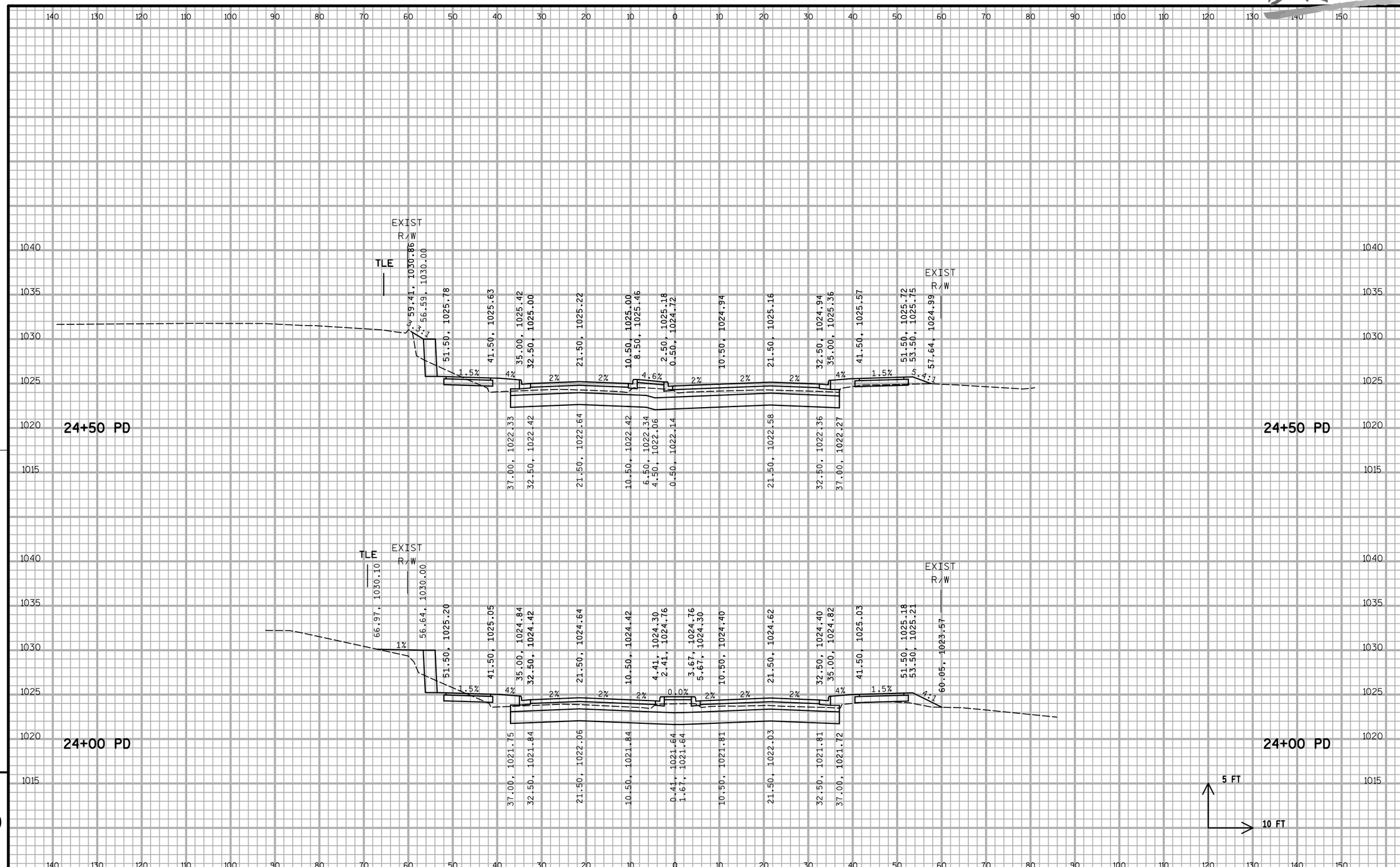

9

9

PROJECT NO:5849-02-02	HWY:CTH PD	COUNTY:DANE	CROSS SECTIONS - MCKEE ROAD (PD)	SHEET 308	E

DRAFT

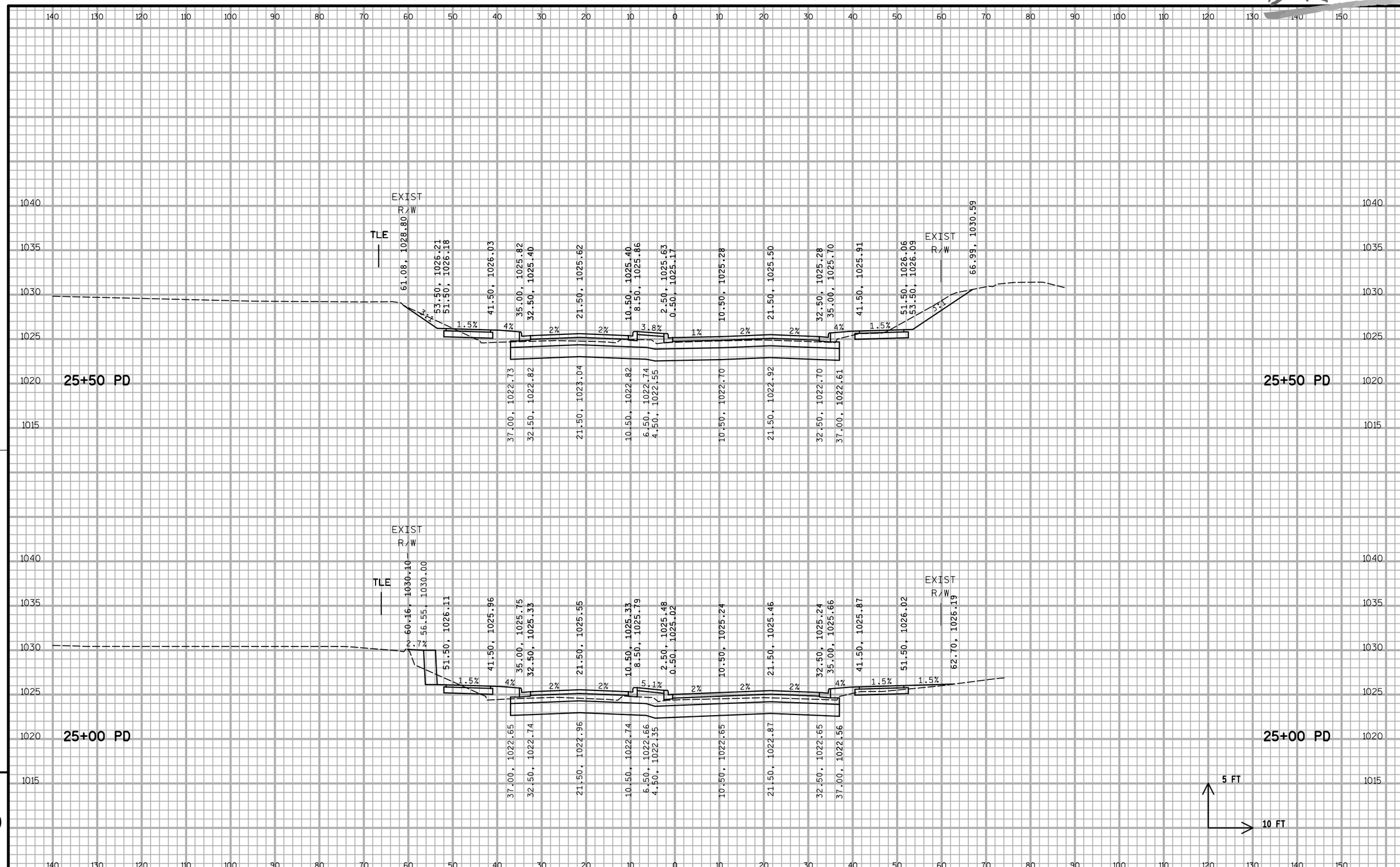

9

9

PROJECT NO:5849-02-02	HWY:CTH PD	COUNTY:DANE	CROSS SECTIONS - MCKEE ROAD (PD)	SHEET 309	E

FILE NAME : S:\MAD\1200--1299\1275\027\Micros\PLAN\090200_xs_pd.dgn PLOT DATE : 5/23/2019 PLOT BY : _username_ PLOT NAME : PLOT SCALE : $$.....plotscale.....$$ WISDOT/CADDS SHEET 21

DRAFT

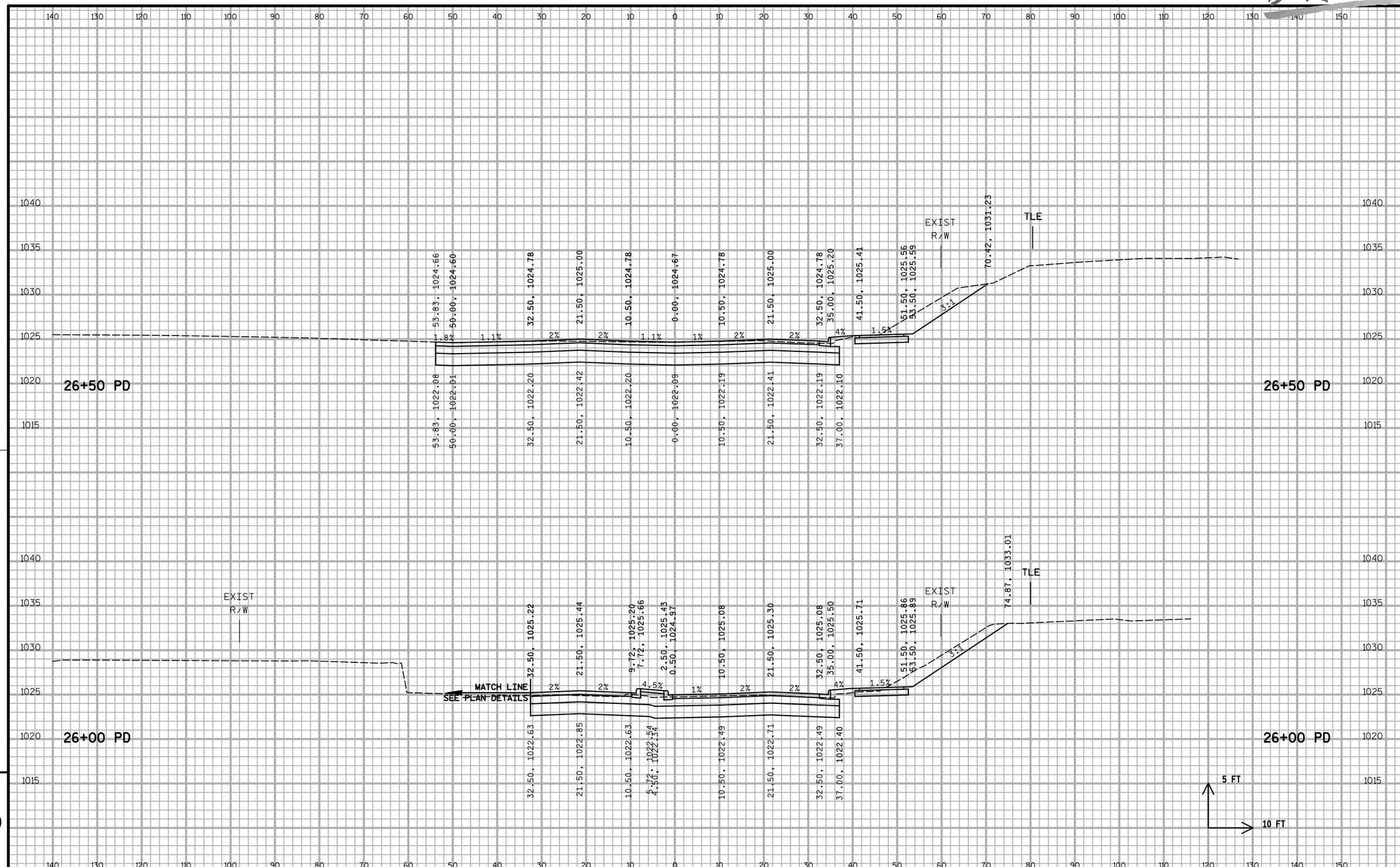

9

9

PROJECT NO:5849-02-02	HWY:CTH PD	COUNTY:DANE	CROSS SECTIONS - MCKEE ROAD (PD)	SHEET 310	E

DRAFT

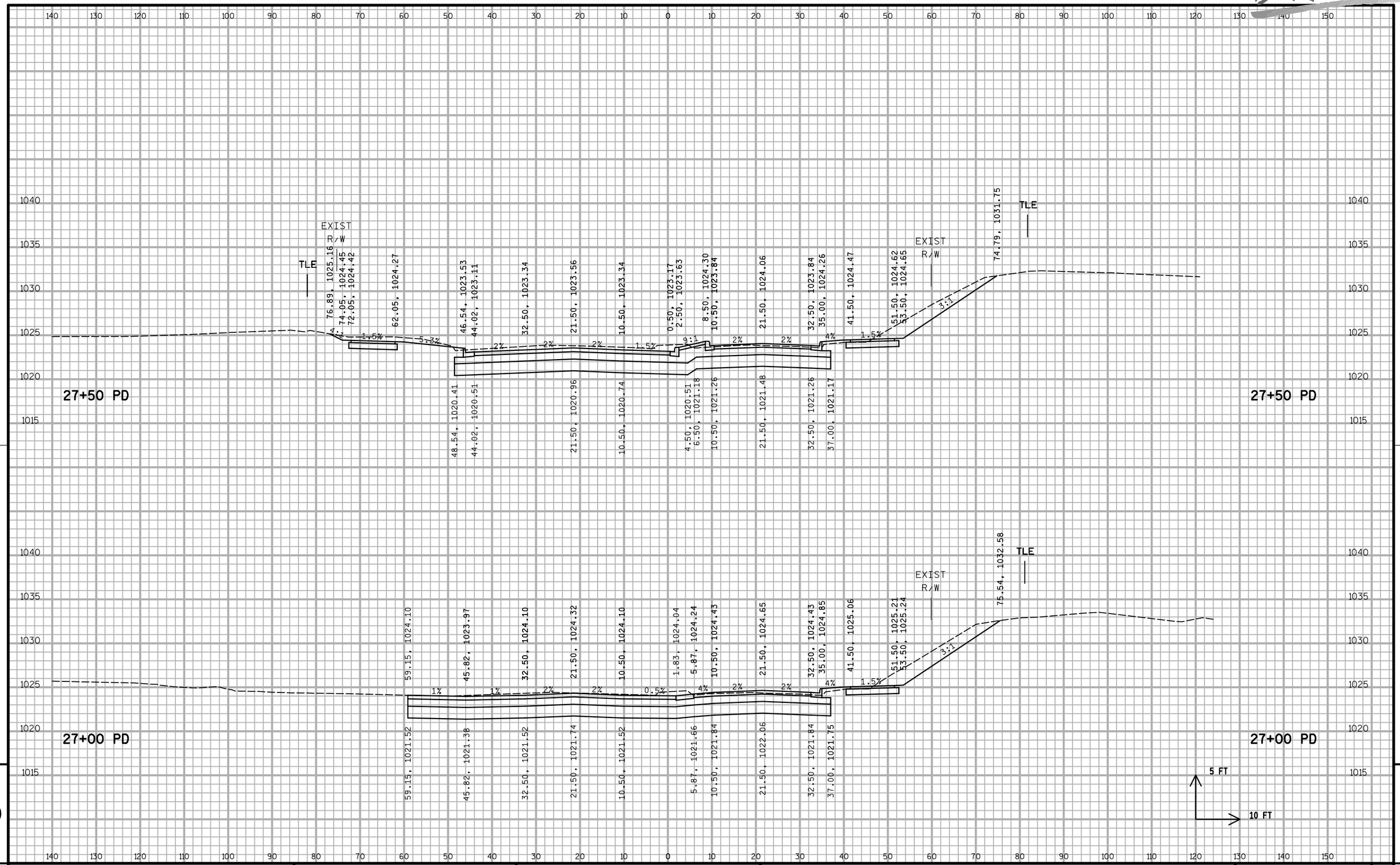

9

PROJECT NO:5849-02-02	HWY:CTH PD	COUNTY:DANE	CROSS SECTIONS - MCKEE ROAD (PD)	SHEET 311	E

FILE NAME : S:\MAD\1200--1299\1275\027\Micros\PLAN\090200_xs_pd.dgn PLOT DATE : 5/23/2019 PLOT BY : _username_ PLOT NAME : PLOT SCALE : $$.....plotscale.....$$ WISDOT/CADDS SHEET 21

DRAFT

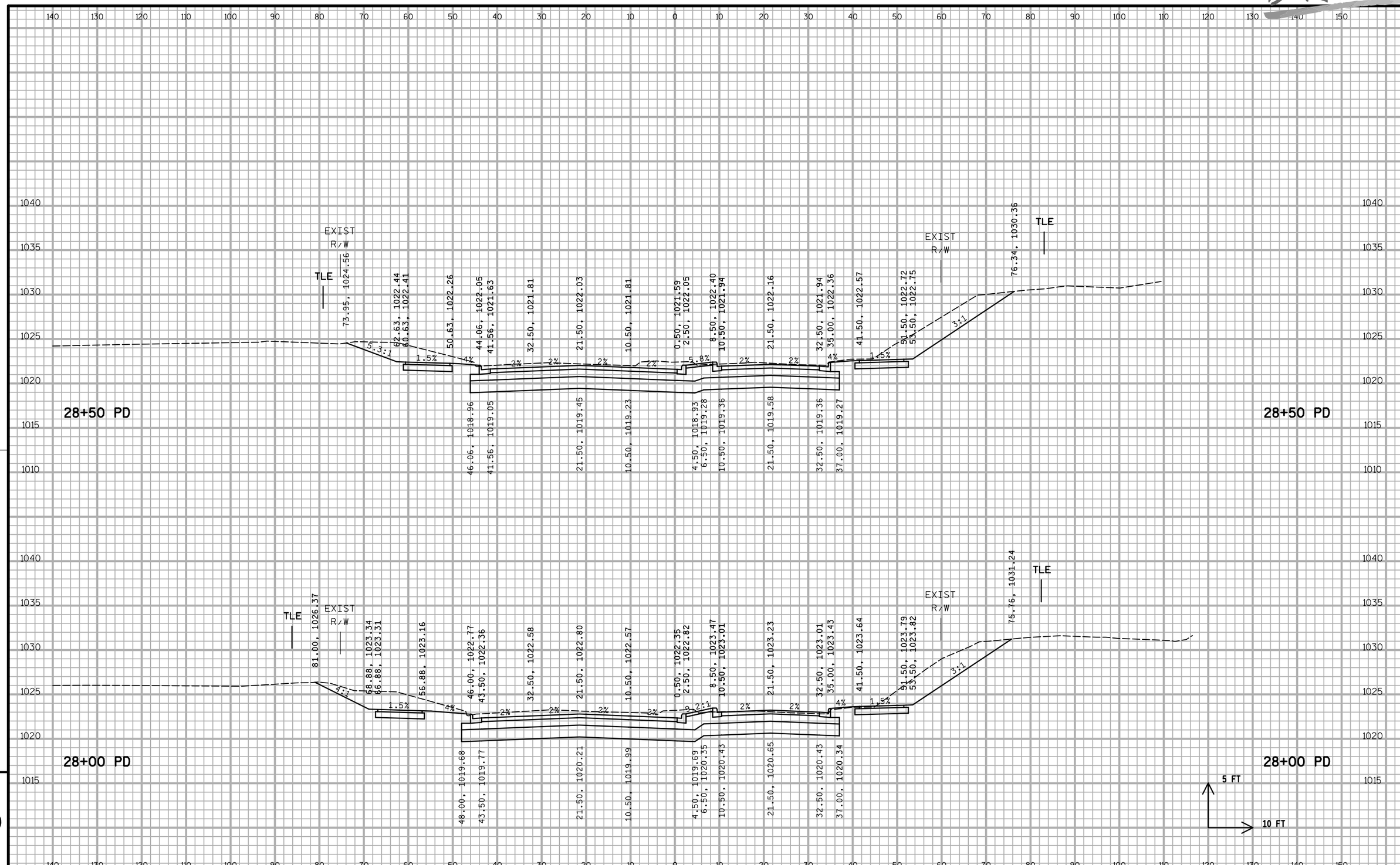

9

9

PROJECT NO:5849-02-02	HWY:CTH PD	COUNTY:DANE	CROSS SECTIONS - MCKEE ROAD (PD)	SHEET 312	E

DRAFT

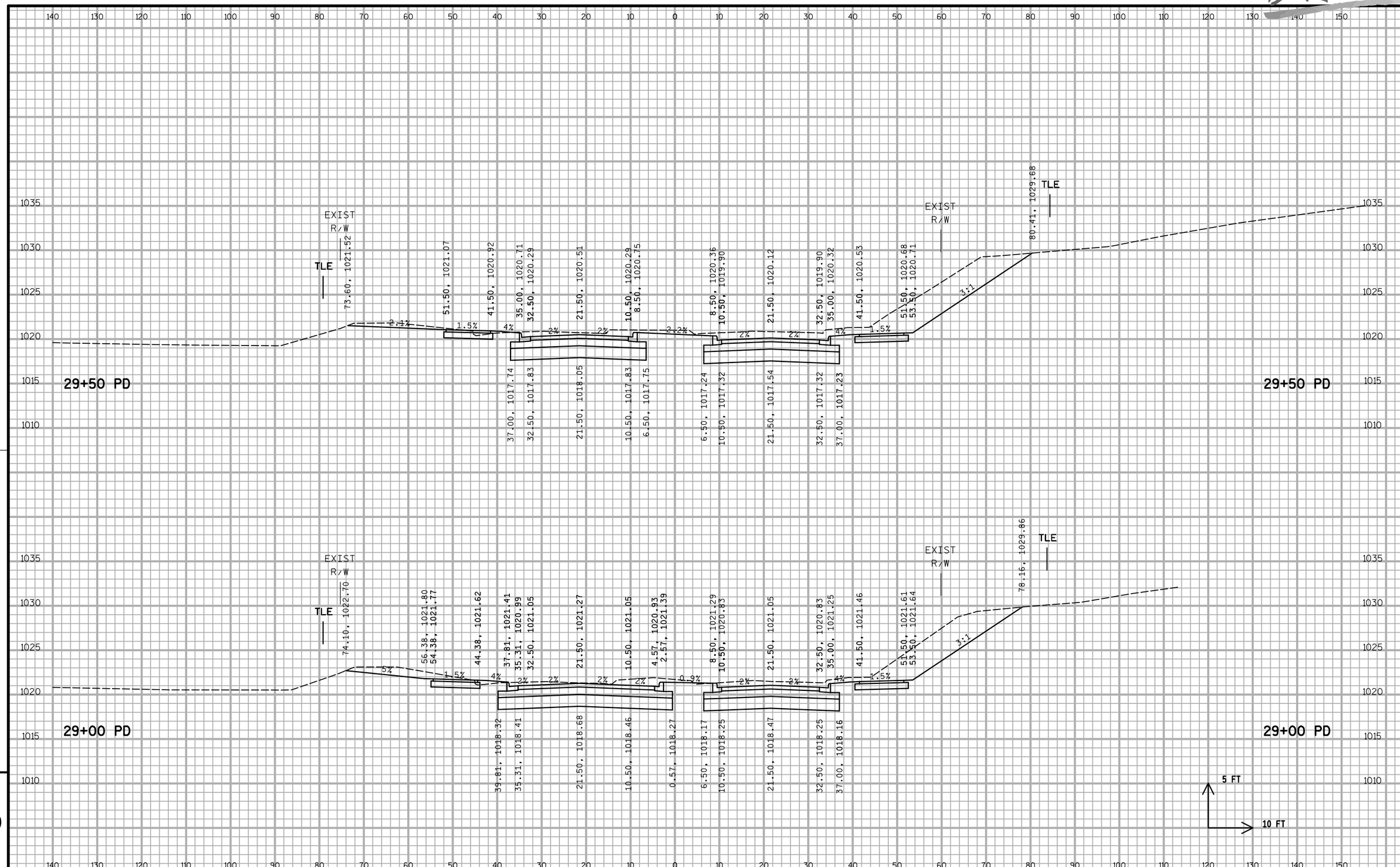

PROJECT NO:5849-02-02	HWY:CTH PD	COUNTY:DANE	CROSS SECTIONS - MCKEE ROAD (PD)	SHEET 313	E

DRAFT

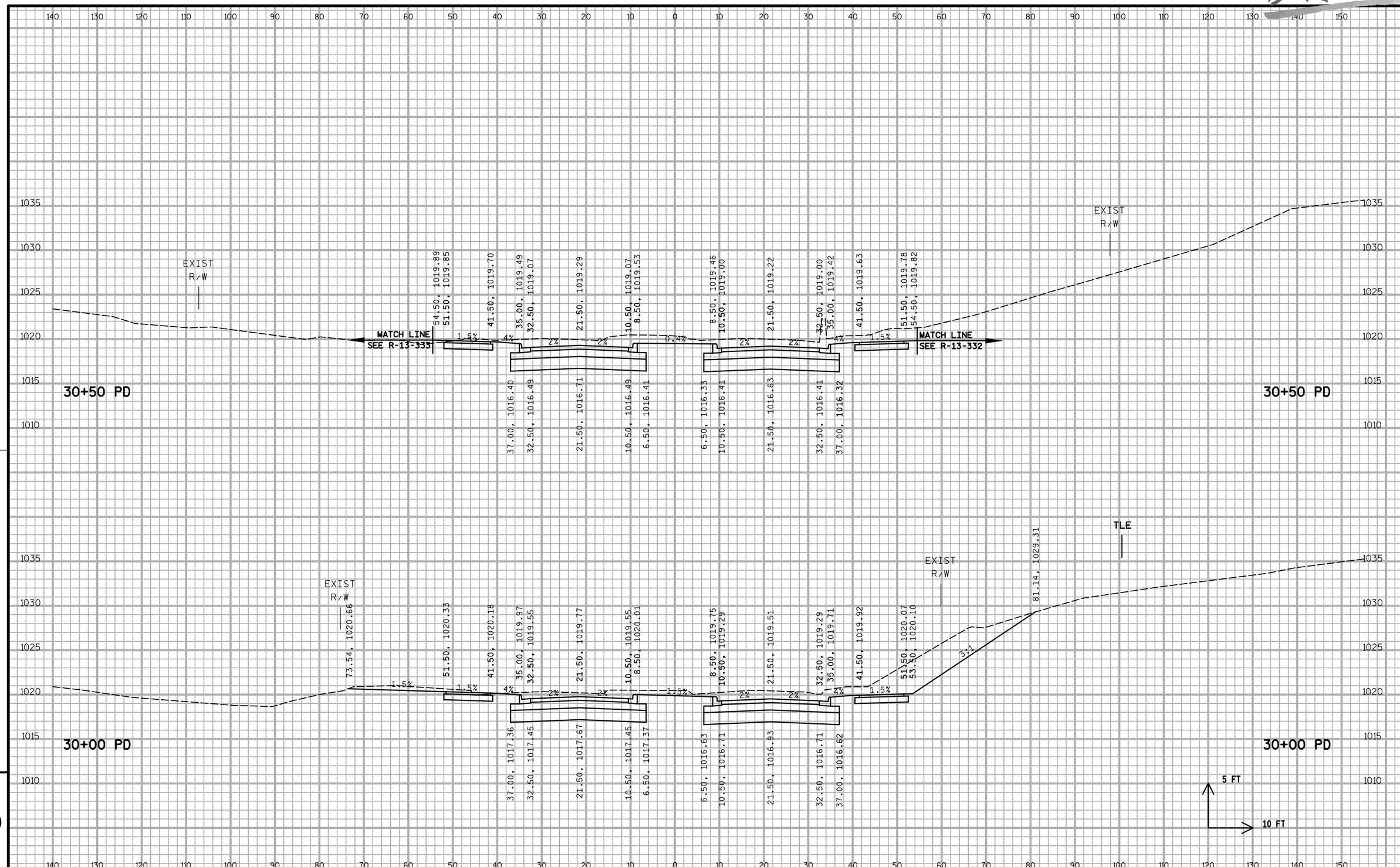

9

PROJECT NO:5849-02-02	HWY:CTH PD	COUNTY:DANE	CROSS SECTIONS - MCKEE ROAD (PD)	SHEET 314	E

FILE NAME : S:\MAD\1200--1299\1275\027\Micros\PLAN\090200_xs_pd.dgn PLOT DATE : 5/23/2019 PLOT BY : _username_ PLOT NAME : PLOT SCALE : $$.....plotscale.....$$ WISDOT/CADDS SHEET 21

DRAFT

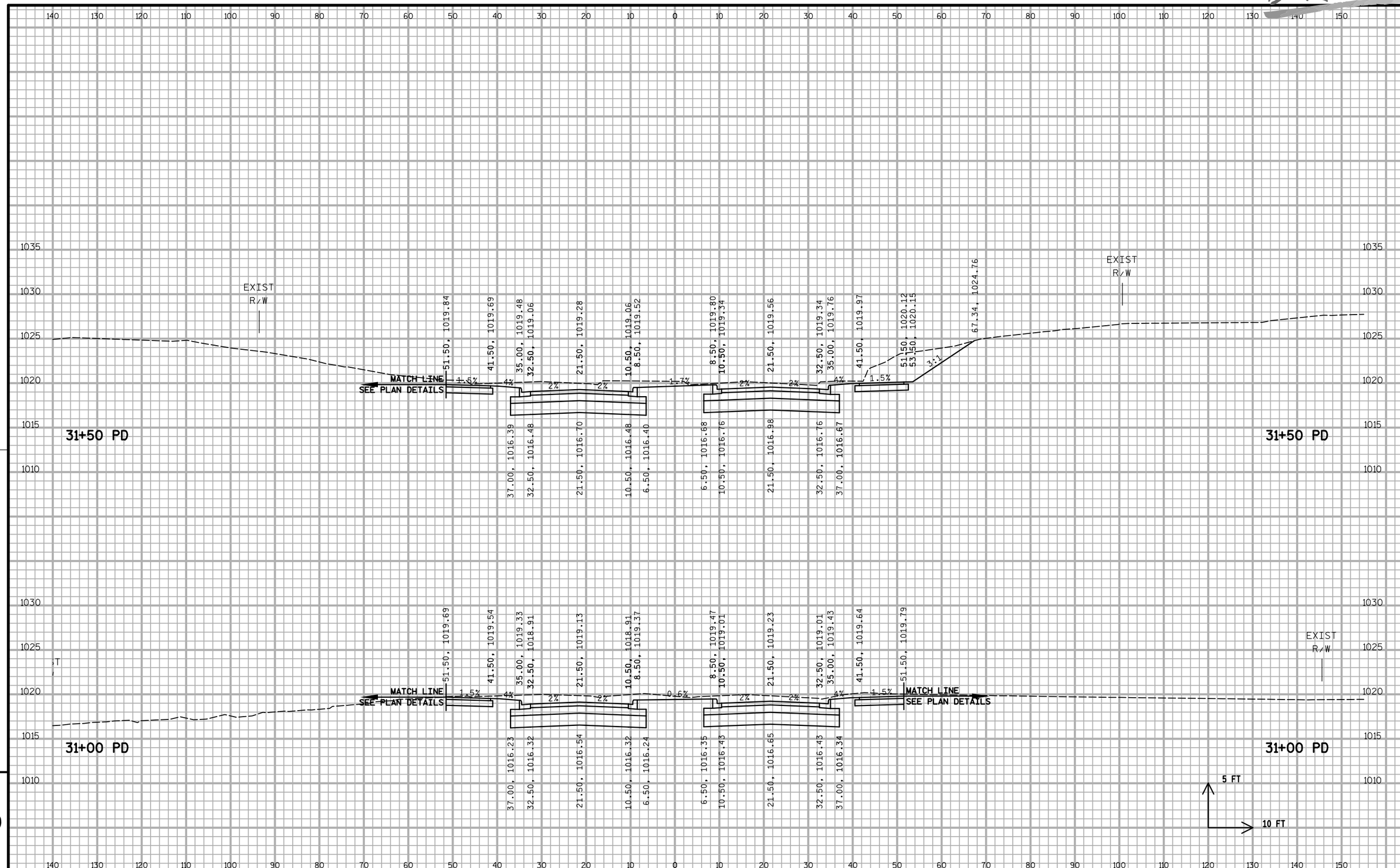

9

PROJECT NO:5849-02-02	HWY:CTH PD	COUNTY:DANE	CROSS SECTIONS - MCKEE ROAD (PD)	SHEET 315	E

FILE NAME : S:\MAD\1200--1299\1275\027\Micros\PLAN\090200_xs_pd.dgn PLOT DATE : 5/23/2019 PLOT BY : _username_ PLOT NAME : PLOT SCALE : $$.....plotscale.....$$ WISDOT/CADDS SHEET 21

DRAFT

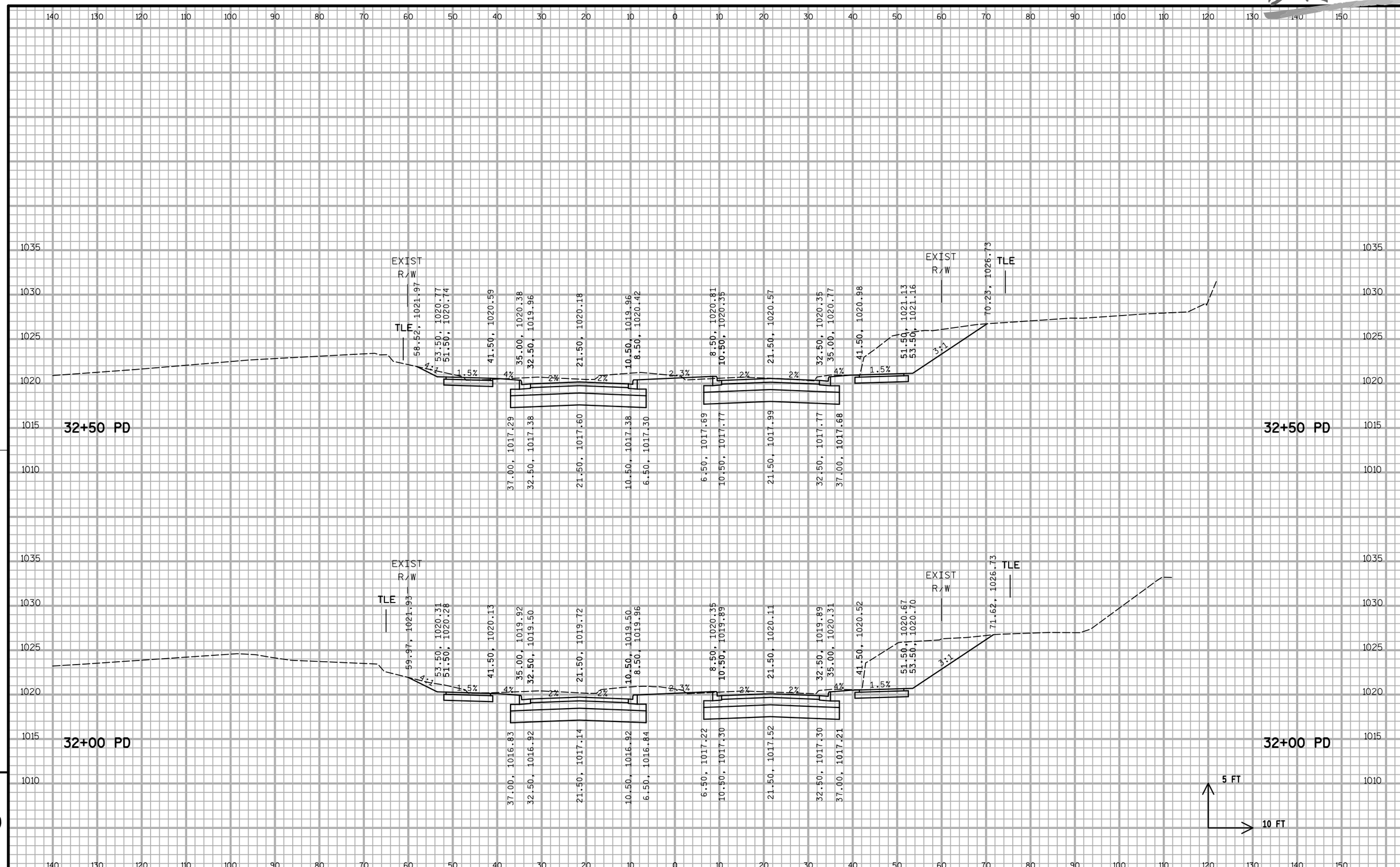

PROJECT NO:5849-02-02	HWY:CTH PD	COUNTY:DANE	CROSS SECTIONS - MCKEE ROAD (PD)	SHEET 316	E

DRAFT

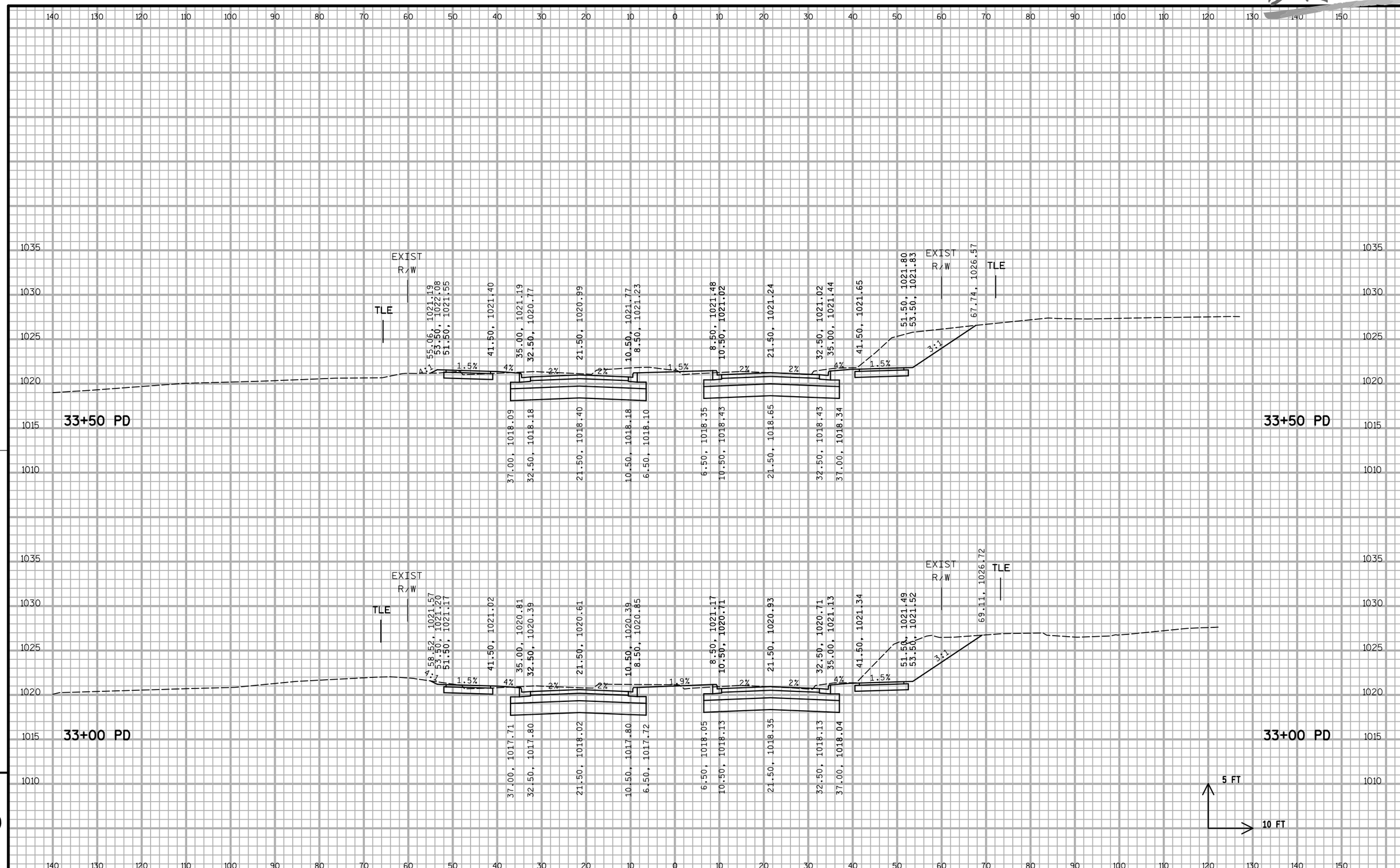

PROJECT NO:5849-02-02	HWY:CTH PD	COUNTY:DANE	CROSS SECTIONS - MCKEE ROAD (PD)	SHEET 317	E

FILE NAME : S:\MAD\1200--1299\1275\027\Micros\PLAN\090200_xs_pd.dgn PLOT DATE : 5/23/2019 PLOT BY : _username_ PLOT NAME : PLOT SCALE : $$.....plotscale.....$$ WISDOT/CADDS SHEET 21

DRAFT

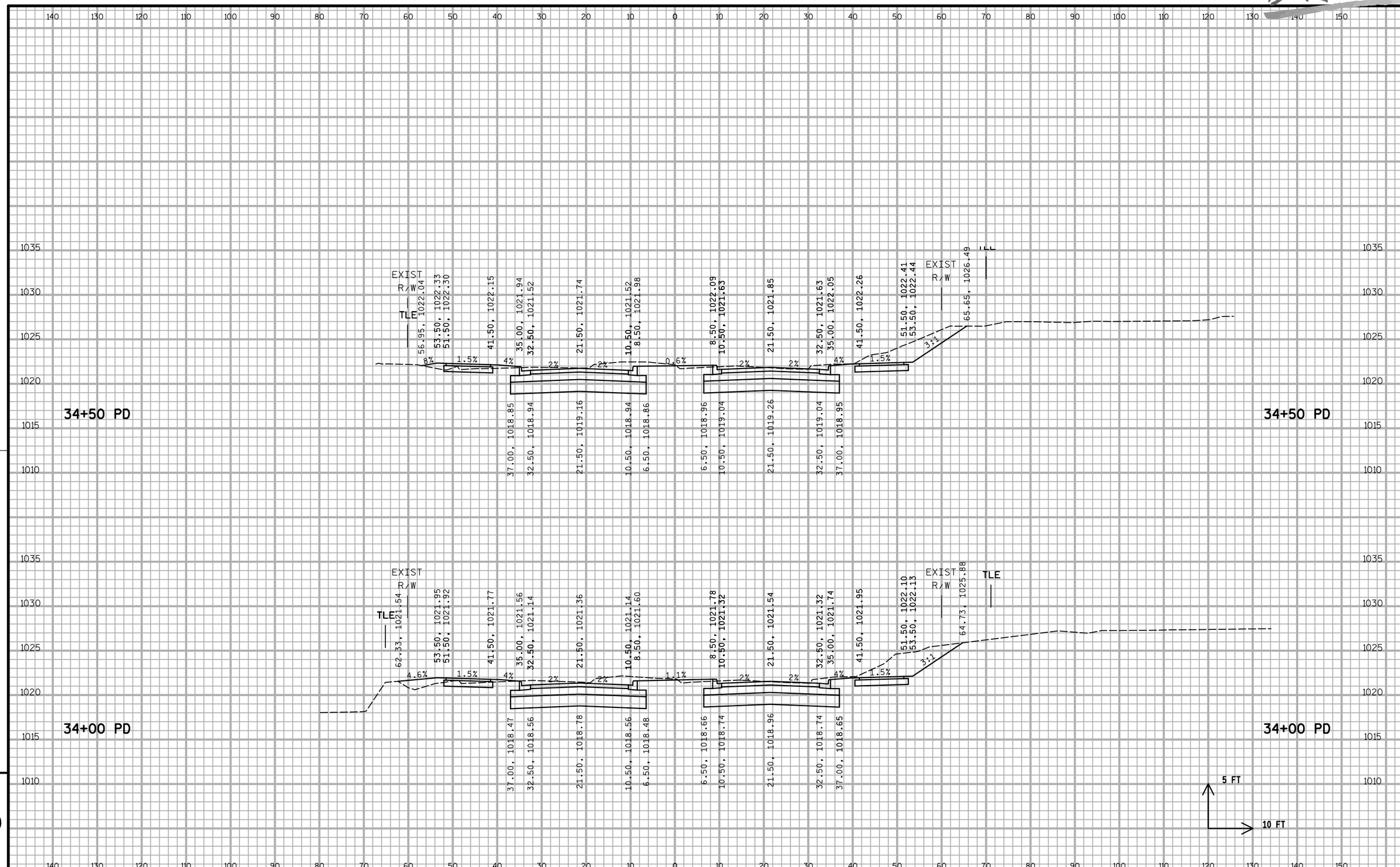

PROJECT NO:5849-02-02	HWY:CTH PD	COUNTY:DANE	CROSS SECTIONS - MCKEE ROAD (PD)	SHEET 318	E

DRAFT

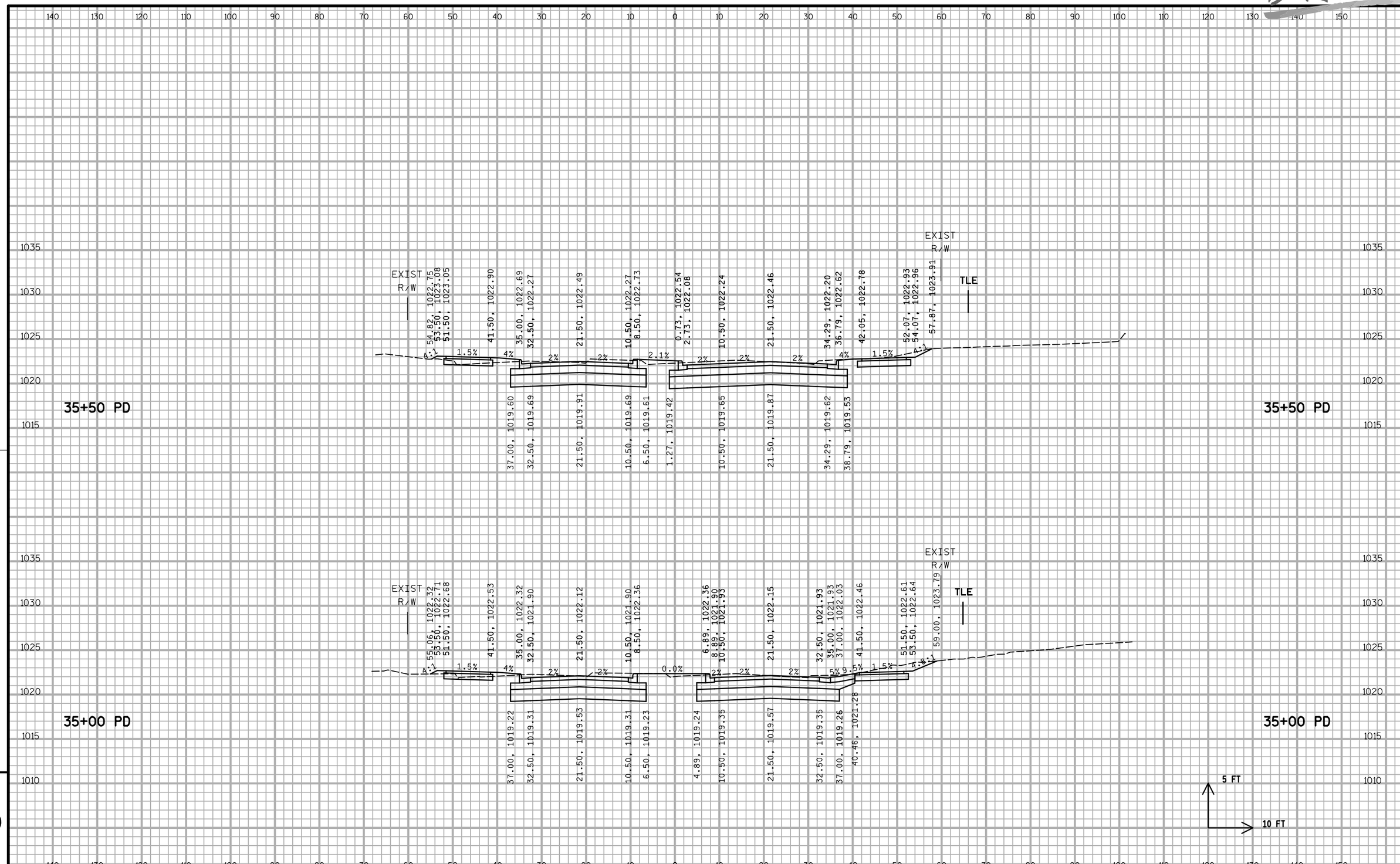

9

9

PROJECT NO:5849-02-02	HWY:CTH PD	COUNTY:DANE	CROSS SECTIONS - MCKEE ROAD (PD)	SHEET 319	E

DRAFT

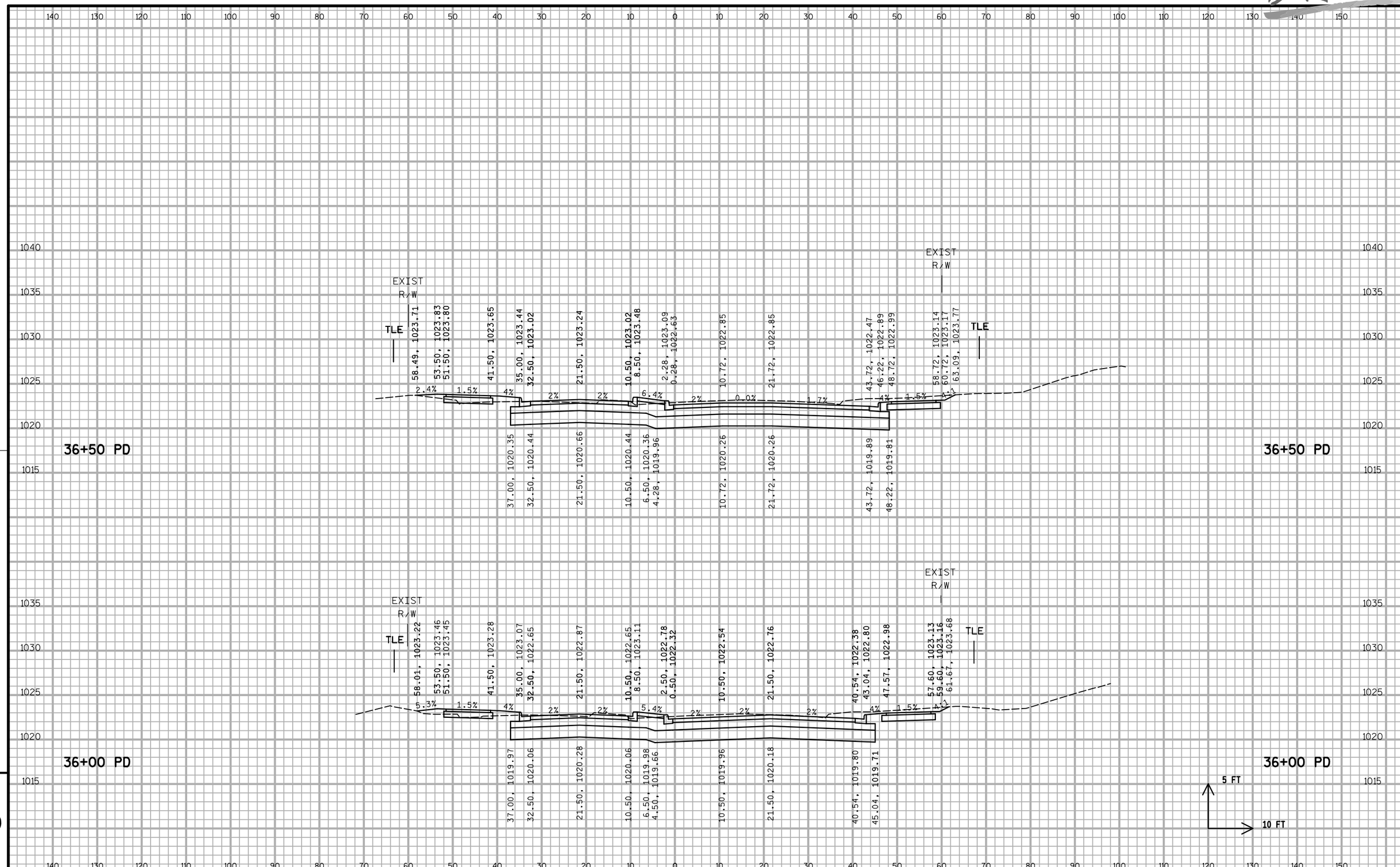

9

9

PROJECT NO:5849-02-02	HWY:CTH PD	COUNTY:DANE	CROSS SECTIONS - MCKEE ROAD (PD)	SHEET 320	E

FILE NAME : S:\MAD\1200--1299\1275\027\Micros\PLAN\090200_xs_pd.dgn PLOT DATE : 5/23/2019 PLOT BY : _username_ PLOT NAME : PLOT SCALE : $$.....plotscale.....$$ WISDOT/CADDS SHEET 21

DRAFT

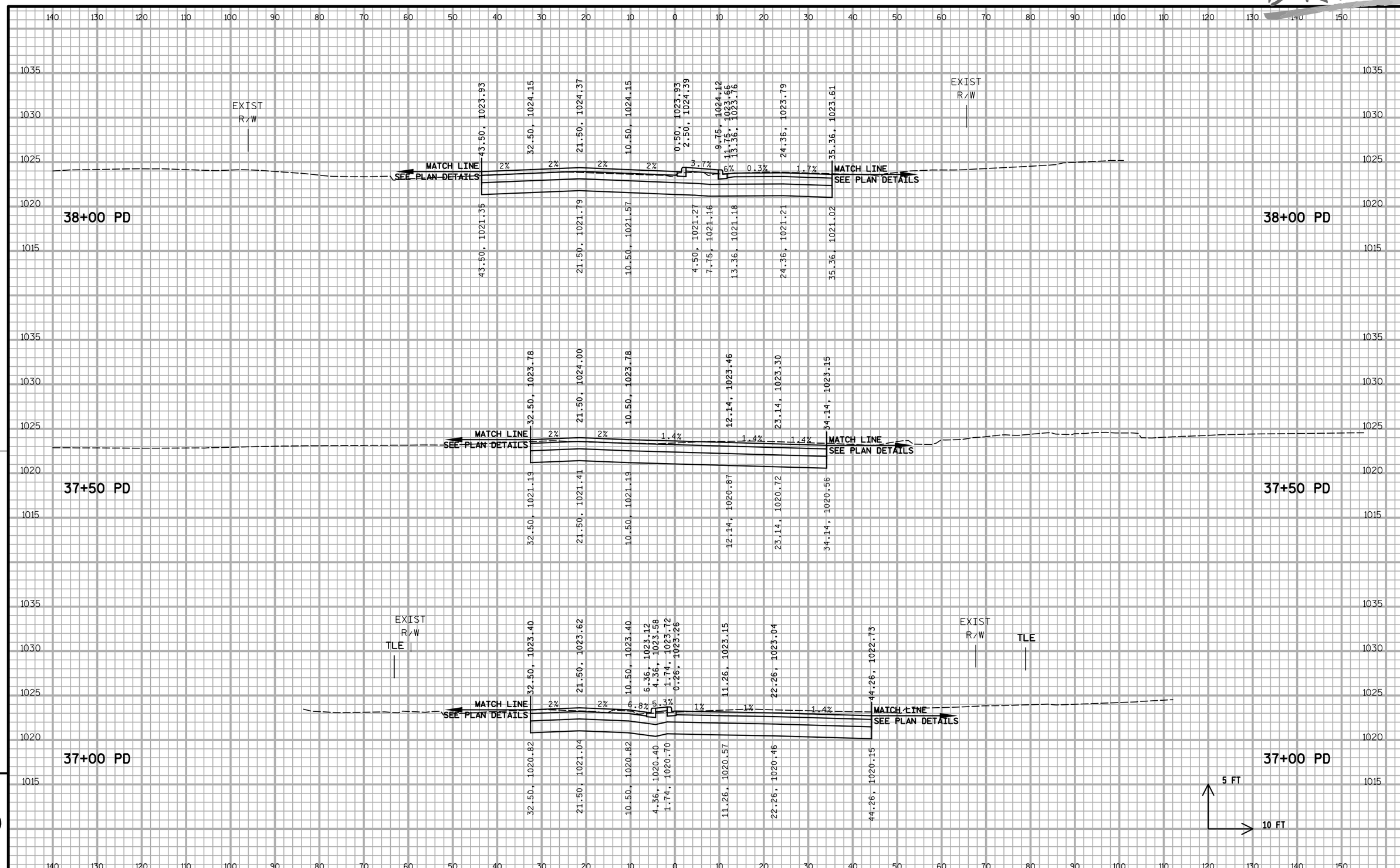

9

PROJECT NO:5849-02-02	HWY:CTH PD	COUNTY:DANE	CROSS SECTIONS - MCKEE ROAD (PD)	SHEET 321	E

DRAFT

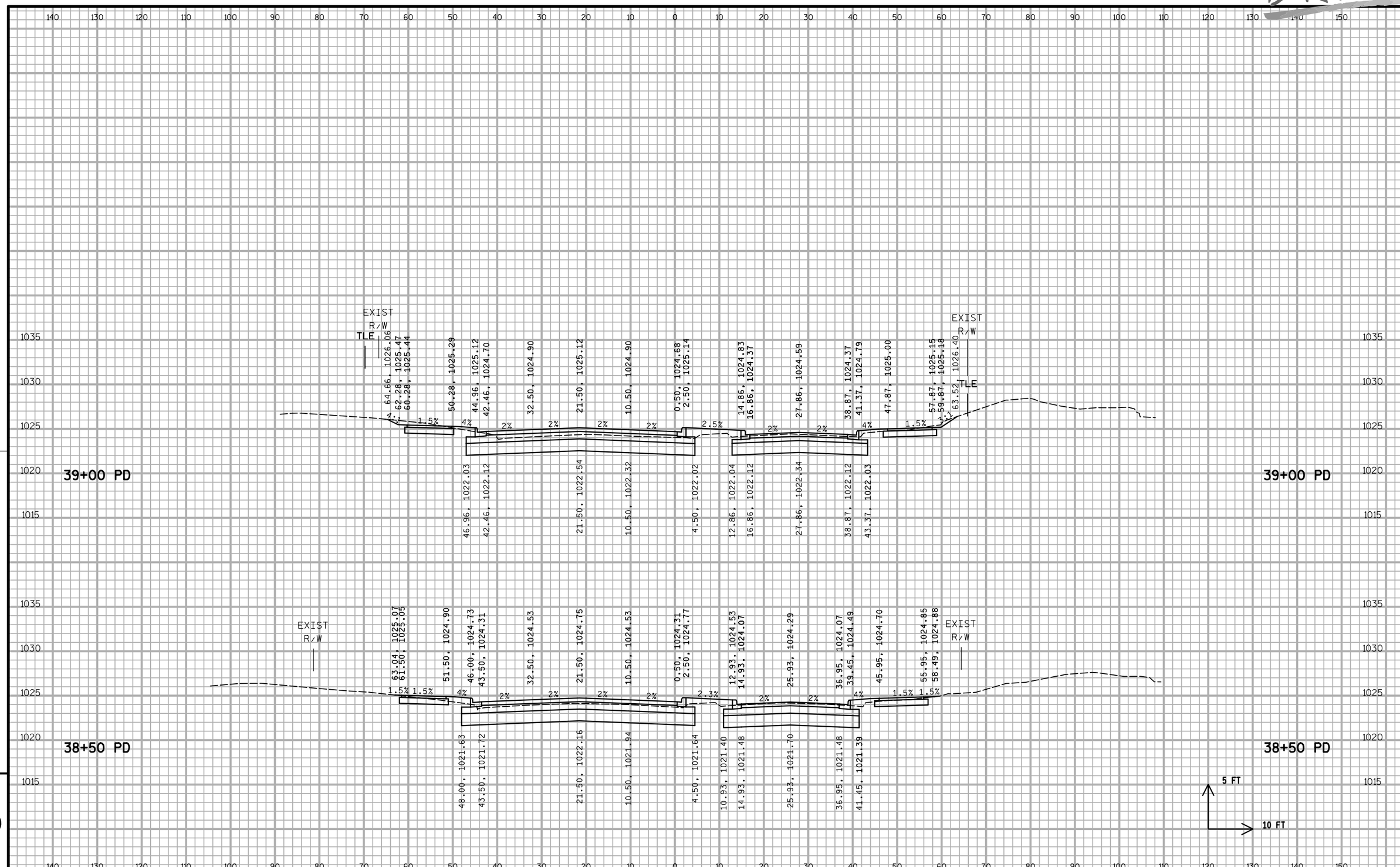

9

PROJECT NO:5849-02-02	HWY:CTH PD	COUNTY:DANE	CROSS SECTIONS - MCKEE ROAD (PD)	SHEET 322	E

DRAFT

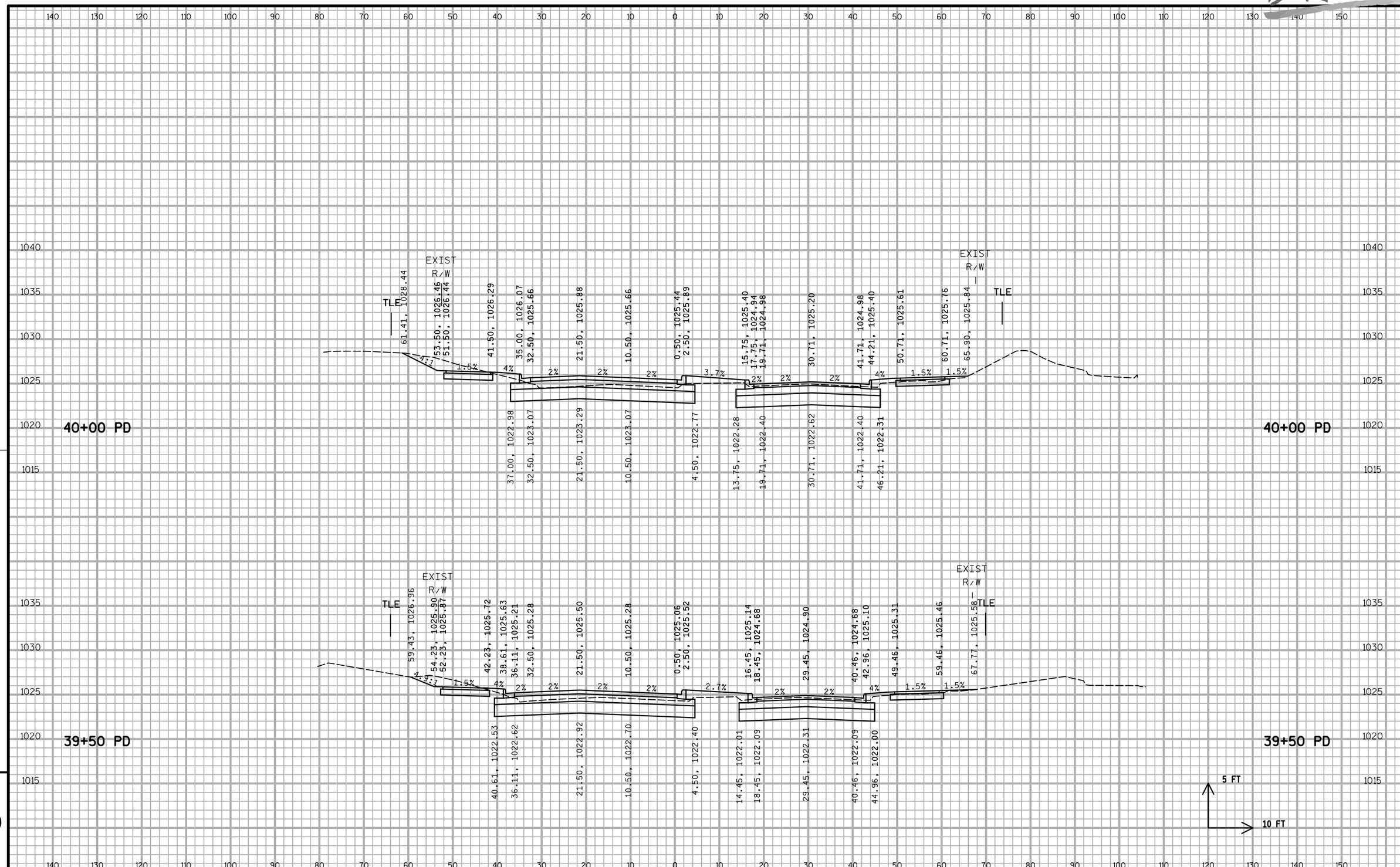

PROJECT NO:5849-02-02	HWY:CTH PD	COUNTY:DANE	CROSS SECTIONS - MCKEE ROAD (PD)	SHEET 323	E